Model AT 9000
Digital Analysis System

Maintenance Manual

Publication No. 351055Z

First Edition
February 1992

MP MASTER
MA29833

Scientific
Atlanta

TABLE OF CONTENTS (Continued)

Chapter			Page
	3.3.15	DS1 Two-point Receiver, Channel 1	3-172
	3.3.16	DS1 Two-point Receiver, Channel 2	3-182
	3.3.17	Signal Analysis Card	3-196
		3.3.17.1 DS1 Circuit	3-196
		3.3.17.2 DS3 Circuit	3-203
	3.3.18	Diagnostic Test	3-211
	3.3.19	Mothercard	3-230
3.4	Regional Service Centers		3-231

CHAPTER 4
PARTS LIST

4.1	Introduction	4-1
4.2	Parts List and Assembly Drawings	4-1
	4.2.1 Explanation of Title Block on Parts Listing	4-1
	4.2.2 Explanation of Parts Lists Column Headings	4-1
4.3	Parts List Index	4-2
4.4	Ordering Parts	4-3

CHAPTER 5
DIAGRAMS

	Index	5-1

LIST OF ILLUSTRATIONS

Figure	Title	Page
2.1	AT 9000 Analyzer Block Diagram	2-2
2.2	Transmitter, DS3 Channel Block Diagram	2-4
2.3	Typical Waveforms, DS3 Channel	2-5
2.4	Transmitter, DS1 Channel Block Diagram	2-7
2.5	Typical Waveforms, DS1 Channel	2-8
2.6	Demux Block Diagram	2-10
2.7	Signal Analysis Card Block Diagram	2-14
2.8	DS3 Trigger and Measurement Points	2-15
2.9	Typical DS1 Signal Analysis Screen	2-16
2.10	Real-Time Clock Block Diagram	2-19
2.11	CPU Block Diagram	2-20
2.12	DS3 2x2 Transmitter Block Diagram	2-21
2.13	DS3 2x2 Demux Block Diagram	2-23
2.14	DS1 2x2 Transmitter Block Diagram	2-25
2.15	DS1 2x2 Receiver Block Diagram	2-27
2.16	DS3 Two-point Receiver Block Diagram	2-28
2.17	DS1 Two-point Receiver Block Diagram	2-30
3.1	QUICK-LOOK Commands	3-4
3.2	Rear Panel, Serial Port Setup Switches	3-9
3.3	Typical Sign-on Screen	3-11
3.4	Typical Directory Screen	3-12
3.5	Typical Configuration	3-13
3.6	Transmitter-Receiver Connection	3-15
3.7	DS3 Error Rate Test Screen	3-15
3.8	DS1 Error Rate Test Screen	3-17
3.9	DS1 Signal Analysis Summary Screen	3-18
3.10	DS3 Signal Analysis Summary Screen	3-19
3.11	Removing Circuit Cards	3-21
3.12	Transmitter Card DS1 Components	3-24
3.13	DSX DS1 Bipolar Signal - Isolated Pulse Template	3-25

LIST OF ILLUSTRATIONS - (Continued)

Figure	Title	Page
3.14	DS1 Transmitter Setup Screen	3-27
3.15	Transmitter Card DS3 Components	3-30
3.16	DSX DS3 Transmitter Output Signal	3-31
3.17	DS3 Transmitter Setup Screen	3-33
3.18	Amplifier Z1 Input	3-34
3.19	Transmitter Bus Interface Components	3-36
3.20	Voltage Check Points	3-39
3.21	Data Pattern A, 1010	3-40
3.22	DS1 Transmitter Setup Screen	3-41
3.23	DS1 Components of Demux Card	3-42
3.24	All Ones Data with Framing Bits	3-45
3.25	Timing Diagram	3-48
3.26	PRBS Signaling Bit Pattern	3-50
3.27	All 1s Signaling Bit Pattern	3-51
3.28	All 0s Signaling Bit Pattern	3-51
3.29	DS3 Components of Demux Card	3-53
3.30	Voltage Checkpoints	3-54
3.31	DS3 Transmitter Setup Screen	3-55
3.32	Data Pattern A, 1010	3-55
3.33	All Ones Data with Framing Bits	3-59
3.34	Timing Diagram	3-62
3.35	Correct Phasing of Recovered Clock	3-67
3.36	DS3 2x2 Card Components	3-70
3.37	DSX DS3 2x2 Transmitter Output Signal	3-71
3.38	DS3 Transmitter Setup Screen	3-73
3.39	Amplifier Z1 Input	3-74
3.40	DS3 2x2 Card Components	3-77
3.41	DSX DS3 2x2 Transmitter Output Signal	3-79
3.42	DS3 Transmitter Setup Screen	3-80

LIST OF ILLUSTRATIONS - (Continued)

Figure	Title	Page
3.43	Amplifier Z2 Input	3-81
3.44	DS3 2x2 Components	3-84
3.45	DS3 2x2 Card Demux Voltages	3-85
3.46	DS3 2x2 Transmitter Setup Screen	3-87
3.47	Data Pattern A, 1010	3-87
3.48	All Ones Data with Framing Bits	3-90
3.49	DS3 2x2 Card Components	3-97
3.50	DS3 2x2 Card Demux Voltages	3-98
3.51	DS3 2x2 Setup Screen	3-100
3.52	Data Pattern A, 1010	3-100
3.53	All Ones Data with Framing Bits	3-103
3.54	DS1 2x2 Card Components	3-110
3.55	DS1 Bipolar Signal	3-111
3.56	DS1 Transmitter Setup Screen	3-112
3.57	DS1 2x2 Card Components	3-116
3.58	DS1 Bipolar Signal	3-117
3.59	DS1 Transmitter Setup Screen	3-119
3.60	DS1 Transmitter Setup Screen	3-122
3.61	Data Pattern A, 1010	3-123
3.62	DS1 2x2 Card Components	3-124
3.63	All Ones Data with Framing Bits	3-127
3.64	Data Pattern A, 1111	3-129
3.65	PRBS Signaling Bit Pattern	3-131
3.66	All Ones Signaling Bit Pattern	3-132
3.67	All Zeros Signaling Bit Pattern	3-132
3.68	DS1 Transmitter Setup Screen	3-135
3.69	Data Pattern A, 1010	3-135
3.70	DS1 2x2 Card Components	3-136
3.71	Data Pulse with Framing Bits	3-140
3.72	Data Pattern A, 1111	3-141

LIST OF ILLUSTRATIONS - (Continued)

Figure	Title	Page
3.73	PRBS Signaling Bit Pattern	3-144
3.74	All Ones Signaling Bits	3-144
3.75	All Zeros Signaling Bits	3-145
3.76	DS3 Two-point Transmitter Setup Screen	3-147
3.77	Data Pattern A, 1010	3-147
3.78	DS3 Two-point Card Components	3-149
3.79	DS3 Two-point Card Supply Voltages	3-150
3.80	All Ones Data with Framing Bits	3-153
3.81	DS3 Two-point Transmitter Setup Screen	3-159
3.82	Data Pattern A, 1010	3-160
3.83	DS3 Two-point Card Components	3-161
3.84	DS3 Two-point Card Supply Voltages	3-162
3.85	All Ones Data with Framing Bit	3-166
3.86	DS1 Two-point Transmitter Setup Screen	3-173
3.87	Data Pattern A, 1010	3-174
3.88	DS1 Two-point Card Components	3-175
3.89	All Ones Data with Framing Bits	3-178
3.90	Data Pattern A, 1111	3-179
3.91	PRBS Signaling Bit Pattern	3-182
3.92	All Ones Signaling Bit Pattern	3-182
3.93	All Zeros Signaling Bits	3-183
3.94	DS1 Transmitter Setup Screen	3-185
3.95	Data Pattern A, 1010	3-185
3.96	DS1 Two-point Card Components	3-187
3.97	All Ones Data with Framing Bit	3-190
3.98	Data Pattern A, 1111	3-191
3.99	PRBS Signaling Bit Pattern	3-194
3.100	All Ones Signaling Bits	3-194
3.101	All Zeros Signaling Bits	3-195
3.102	DS1 Transmitter Setup Screen	3-197

LIST OF ILLUSTRATIONS - (Continued)

Figure	Title	Page
3.103	DS1 Components of Signal Analysis Card	3-198
3.104	Typical DS1 Signal Analysis Summary Screen	3-199
3.105	DS1 Bipolar Signal	3-200
3.106	Analyzer Connection Cables	3-201
3.107	DS3 Transmitter Setup Screen	3-204
3.108	DS3 Components of Signal Analysis Card	3-205
3.109	Typical DS3 Signal Analysis Summary Screen	3-206
3.110	DS3 Bipolar Signal	3-207
3.111	CPU LEDs	3-212
3.112	CPU LED Sequence/Diagnostic Test Number	3-213
3.113	CPU DIP Switches and Dead-man Jumper	3-214
3.114	Diagnostic Test List	3-216
3.115	Clock/Power Components on RTC Card	3-217
3.116	AT 9000 Analyzer, Typical Configuration	3-219
3.117	Typical Directory	3-220
3.118	CPU Connector Location	3-221
3.119	10-Millisecond Clock Pulse	3-227
3.120	Typical Latch Signal	3-228

CHAPTER 1
INTRODUCTION

1.1 WHAT THE ANALYZER DOES

The AT 9000 Analyzer tests out-of-service, in-service, end-to-end or loop DS1 and DS3 circuits. The analyzer also automatically detects frame and pattern for DS3 and DS1 signals, measures and records total errors, error seconds, frame, pattern, and signal loss seconds and various status events.

An optional signal analysis card measures waveform, amplitude, pulse width and symmetry.

The AT 9000 Analyzer is a user configurable unit. The base design is a processor and real-time clock, and you arrange transmitters, receivers or signal analysis cards to suit your operation. In this manual, we present maintenance procedures covering a typical combination of cards, and in the process cover any cards or any combination of cards you might have.

The front panel has an ON-OFF switch and a power indicator. The rear panel has all the controls and connectors for the serial and GPIB interface. They are explained in the Maintenance section.

CHAPTER 2
THEORY OF OPERATION

2.1 INTRODUCTION

Chapter 2 is the "How-It-Works" section; how the AT 9000 Analyzer works and how each of the cards within the analyzer works.

Chapter 2 is not a textbook theory of operation, a dissertation of Boolean principles, binary doctrine or even an explanation of DS0 to DS3 theory. In this chapter, we discuss theory at the same level of detail that we discuss troubleshooting.

And there's a reason for this. Most of the circuits in the AT 9000 Analyzer are not repairable; you simply pop out the defective chip and replace it.

If you are curious, and want to know more about digital transmission, check out any of several data books referred to in the text.

The idea of a theoretical discussion of the analyzer is to give you some added information to troubleshoot. The diagnostic sequence in Section 3.3.18 thoroughly covers the circuits for the central processing unit (CPU) and the real-time clock. Consequently, most of the detailed theory is for the cards not covered by the diagnostic sequence; the transmitter, the demux, the signal analysis card, 2 x 2 cards and 2 point monitor cards.

2.2 AT 9000 ANALYZER

Figure 2.1 is a block diagram of a typical configuration of an AT 9000 Analyzer with a typical configuration of application cards. In the AT 9000 you may have multiples of each application card, but the maximum total number of cards must not exceed 12. A second CPU is required for configurations that have more than 6 cards.

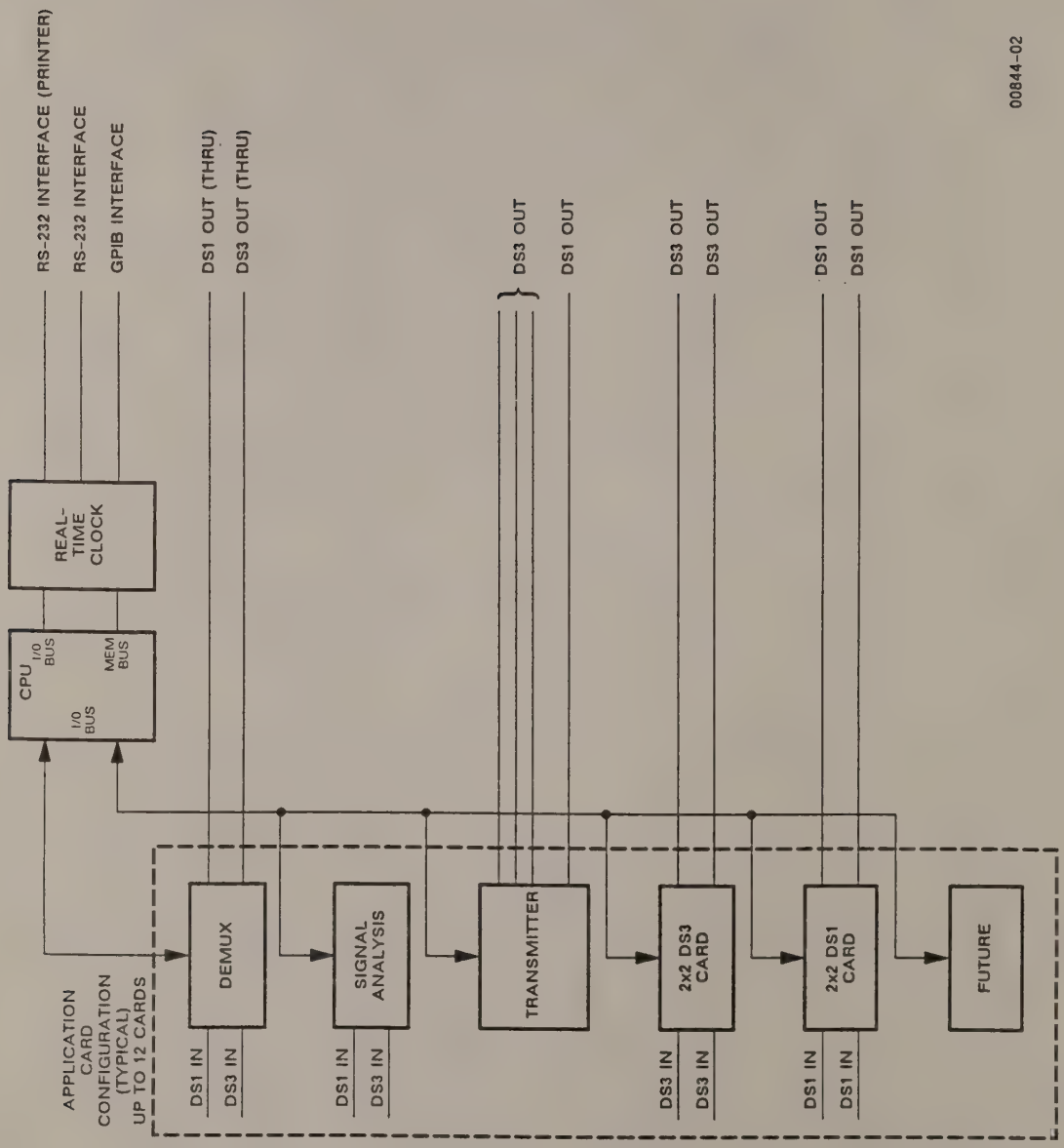

Figure 2.1. AT 9000 Analyzer Block Diagram

The word "analyzer," as applied to the AT 9000 Analyzer, means it demultiplexes, analyzes and tests. It can be used on telecommunications circuits that are being used or are out of service; it does end-to-end tests, loopback tests, and THRU mode tests. Status of the signals being tested is shown on a serial port printer or CRT, or both.

The signal measurements (with or without demultiplexing) include decoding, framing, recognizing line patterns, and detecting and counting all errors in the DS1 and DS3 signal.

A separate signal analysis card is an option and does waveform shape measurements.

The demux reads the incoming data and, if a particular test requires it, demultiplexes the input signal down to the required level. Transmitters synthesize signals at the correct rate with programmed frame and data patterns. The CPU and real-time clock collect, display and store the data from each receiver.

2.3 TRANSMITTER

2.3.1 DS3 Circuit

Figure 2.2 is a block diagram of the DS3 channel of the transmitter, and Figure 2.3 shows waveforms at different places in the block diagram.

The source of the DS3 clock pulse can be the internal temperature-compensated crystal oscillator (TCXO), or an external clock source, or a loop-timed clock from the demux card. The internal and external clock sources are (physically) on the transmitter card and the loop-timed clock is derived from the DS3 input on the demux card. Which clock the operator chooses depends on what kind of test he is running.

The output of buffer U3, properly adjusted with potentiometer R2, is a 44.736 MHz clock with an approximately 50/50 duty cycle, shown as (A) in Figure 2.3. (Procedures for making this adjustment are given in Chapter 3, Maintenance, Section 3.3.3.2.)

U6 doesn't change the waveform and the output of U6 (B) should be identical to the output of U3(A).

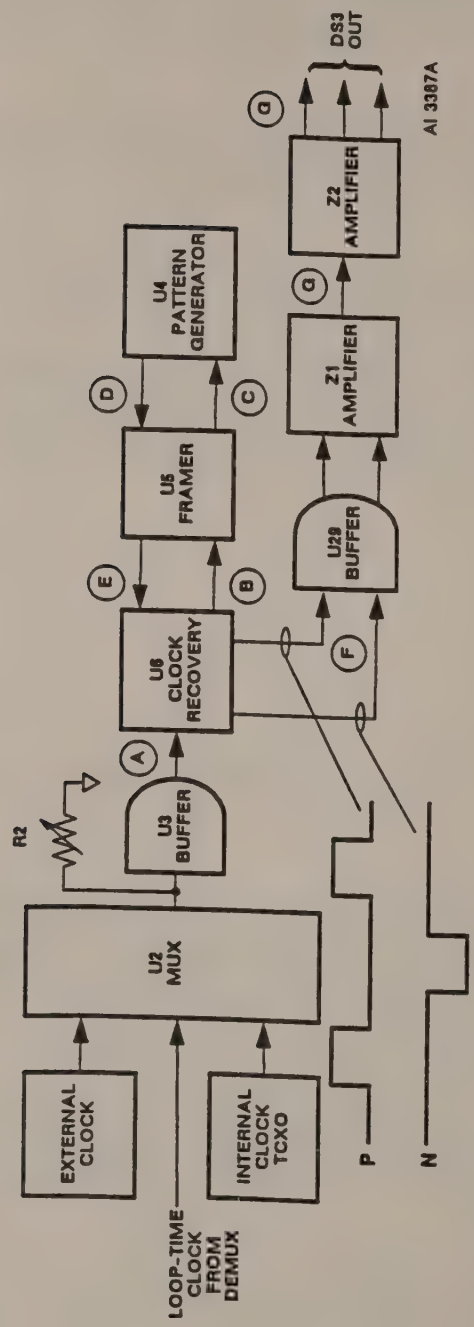

Figure 2.2. Transmitter, DS3 Channel Block Diagram

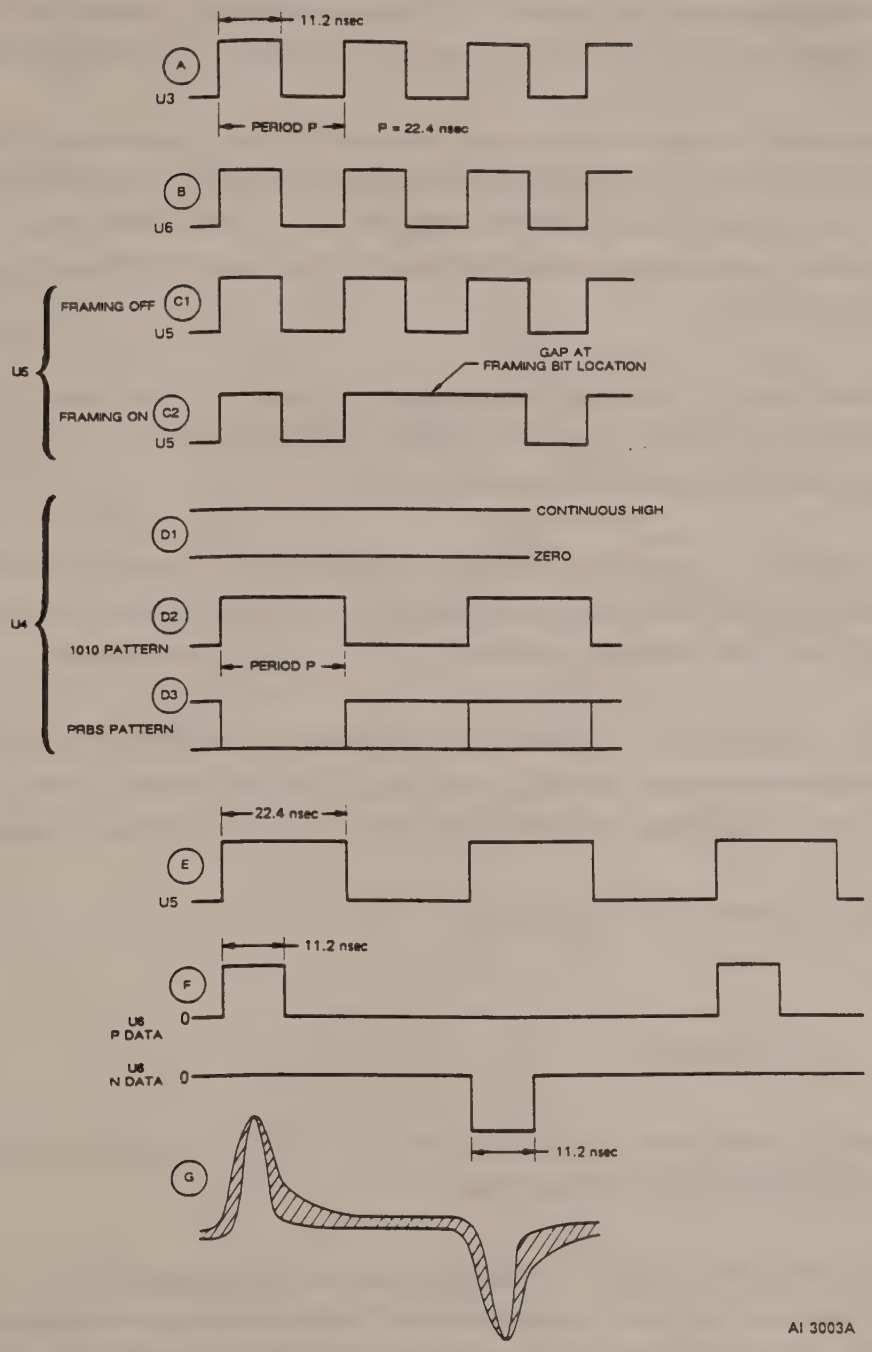

Figure 2.3. Typical Waveforms, DS3 Channel

With the framing off, the clock output of U5 (C1) is unchanged from U6; but with the framing turned on, the clock output from U5 (C2) to U4 will have gaps in it, corresponding to the framing bit locations.

The output of U4 depends on the data pattern the operator has set into the analyzer. A fixed data pattern of all 1s would give you a continuous high output (D), and 1010 data pattern will give you positive-going pulses (D2), and a pseudorandom bit sequence (PRBS) pattern will give you a random positive-going and negative-going pattern similar to the third waveform under D of Figure 2.3. Exactly how the PRBS pattern looks depends on how you trigger the scope.

The waveform from U5 to U6 again depends on the data pattern set into the analyzer, but, for instance, a 1010 pattern (D2) should give you the same waveform at the output of U5 (E) as at the output of U4 with framing bits scattered through the data when framing is on.

U6 (F) produces two streams, or rails, of data - p data and n data ("p" for positive and "n" for negative). The p data stream goes positive on every other incoming "1"; the n data stream goes negative on every other incoming "1" the p data stream didn't go positive on.

These two data streams go to amplifier Z1, through buffer U29. Amplifier Z1 combines the two data streams and produces a bipolar signal (G). What you see is the DSX template. HI and LO signals have different shapes and amplitudes. HI-MON and DSX-MON are the HI and DSX signals reduced by 20 dB.

Amplifier Z2 has three 75-ohm outputs (G).

2.3.2 DS1 Circuit

Figure 2.4 is a block diagram of the functions of the DS1 channel of the transmitter, and Figure 2.5 shows waveforms at different places in the block diagram.

The DS1 clock source can be the internal temperature-compensated crystal oscillator, an external clock source, or loop-timed clock source from the demux card. The internal and external clocks are physically on the transmitter card and the loop-timed clock is derived from the DS1 input on the demux card. Which clock the operator chooses depends on what kind of test he is running, but regardless, the output of buffer U11, properly adjusted with potentiometer R3, is a 1.544 MHz clock pulse, shown as (A) in Figure 2.5. (Complete adjustment procedures are given in Chapter 3, Maintenance, Section 3.3.3.1.)

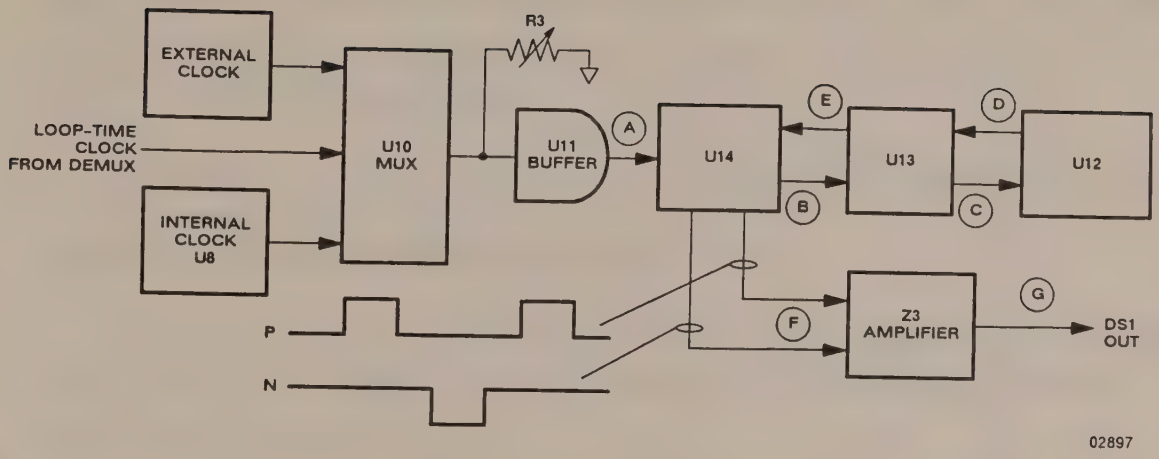

Figure 2.4. Transmitter, DS1 Channel Block Diagram

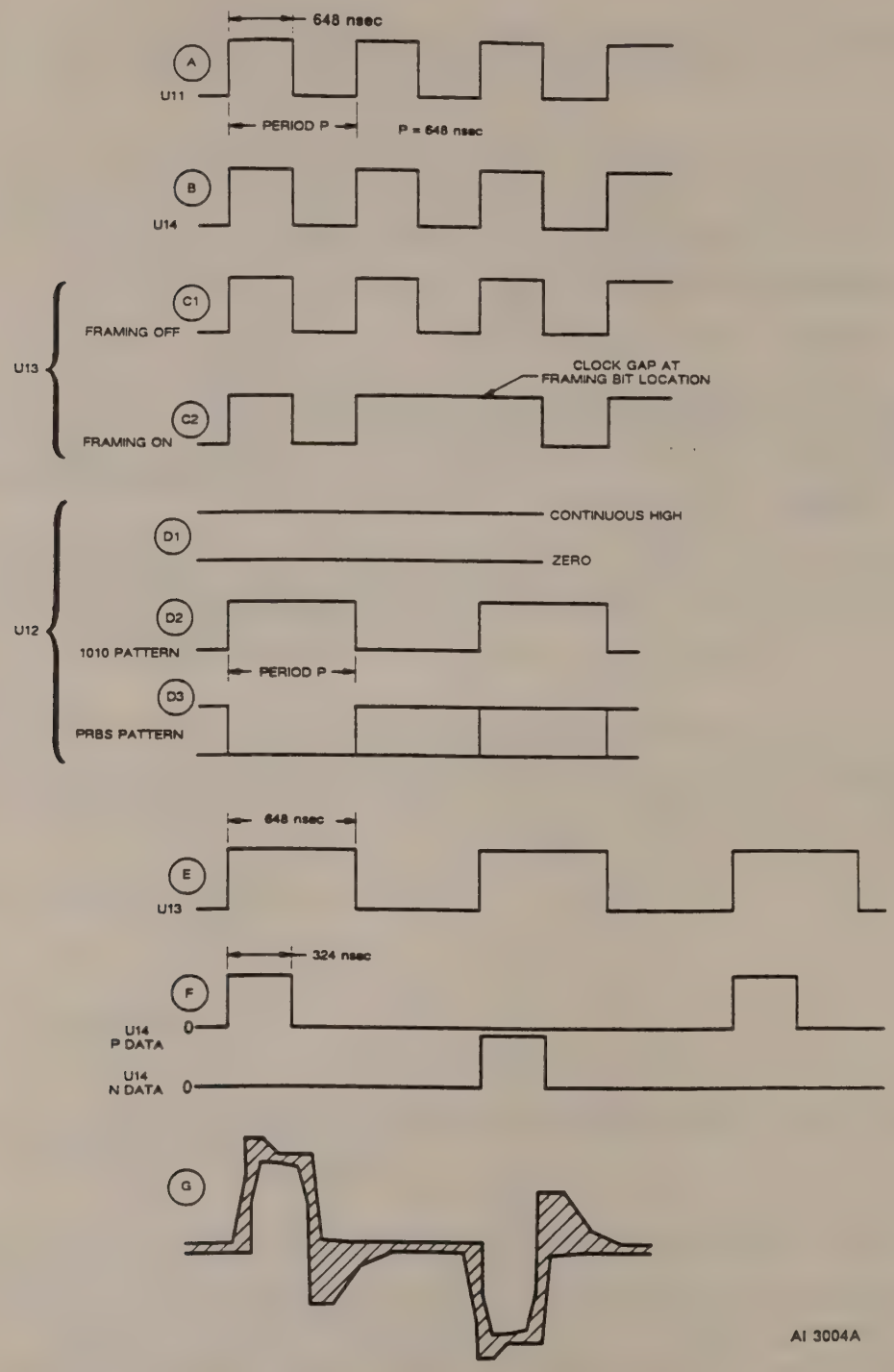

Figure 2.5. Typical Waveforms, DS1 Channel

U14 doesn't modify the waveform and the output of U14 (B) should be identical to the output of U11 (A).

With the framing off, the output pulse of U13 (C1) is unchanged from U14, but with framing on, you may or may not see a positive-going pulse at the output of U13 (C2), depending on how you trigger the scope.

The output of U12 depends on the data pattern the operator has set into the analyzer. A fixed data pattern of all 1s would give you a continuous high output dc level (D1); a 1010 data pattern will give you positive-going pulses (D2), and a PRBS pattern will give you a random positive-going and negative-going pattern similar to (D3) of Figure 2.5. Exactly how the PRBS pattern looks depends on how you trigger the scope.

The waveform from U13 to U14 again depends on the data pattern set into the analyzer, but, for instance, a 1010 pattern (D2) should give you the same waveform, (E), at the output of U13 as at the output of U12 with framing bits scattered through the data when framing is on.

U14 (F) produces two streams, or rails, of data. The p data stream goes positive on every other incoming "1"; the n data stream goes positive on every other incoming "1" the p data stream didn't go positive on. (U14 inverts the n data stream).

These two data streams go to amplifier Z3, and transformer T1 where they are combined into the familiar DSX-1 bipolar signal. A sketch of the DSX-1 template is shown (G).

The DSX-1 waveform displayed on an oscilloscope must fit within the shaded area of a properly scaled version of this template to meet specifications.

2.4 DEMUX

The demux is a receiver that analyzes and demultiplexes a DS3 signal down to DS0, or demultiplexes a combination of DS3 and DS1 signals down to DS0. Figure 2.6 is a block diagram of the demux.

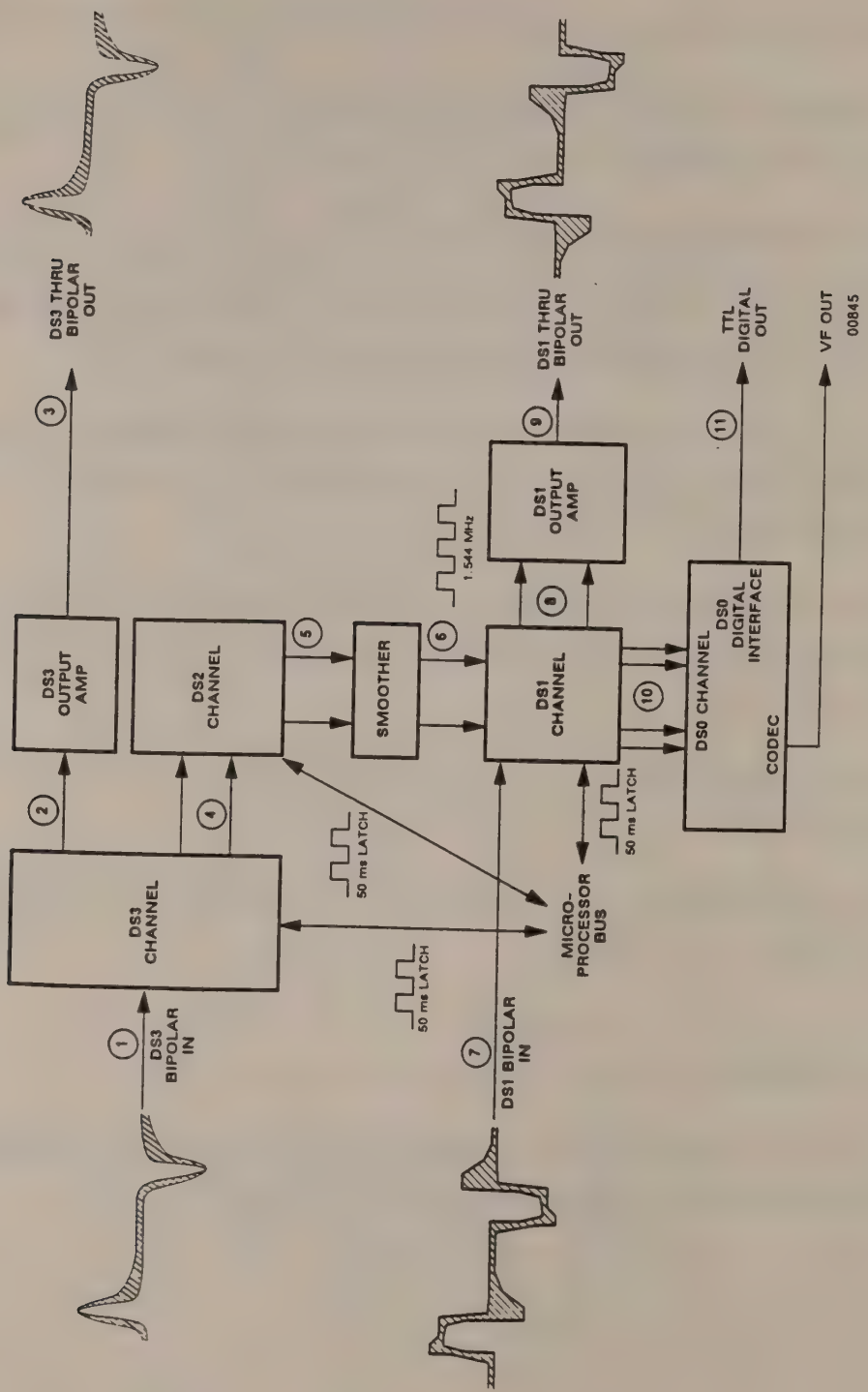

Figure 2.6. Demux Block Diagram

The demux inputs and outputs are:

Connector	Function Level
DS3-RX1	DS3 bipolar input HI, DSX/LO, HI-MON or DSX-MON
DS3-TX1	DS3 THRU DSX regenerated
DS1-RX2	DS1 bipolar input DSX, DSX-MON
DS1-TX2	DS1 THRU DSX
DS0 OUT	Digital out TTL
VF OUT	Audio out analog

The DS3/DS1 Receive/Demux card:

- Simultaneously tests DS1 and DS3 circuits
- Demultiplexes and measures DS1 and DS3
- Demultiplexes any DS1 from a DS3
- Demultiplexes any DS0 from any external or internal demuxed DS1
- Inserts errors in the THRU mode for in-service testing at DS1 and DS3
- Regenerates with framing and coding in the THRU mode

The DS3 receiver (number 1, on Figure 2.6) accepts a framed or unframed bipolar, B3ZS encoded signal. Input levels are either HI or DSX/LO. The HI level is for rectangular signal and the DSX/LO level is for signals that have passed through 450 feet to 900 feet of coaxial cable.

DS3 data can be framed (4) using DS3 M13 format or the enhanced DS3 C-bit parity format. The receiver can detect F-bit and parity errors in both framing modes and can detect C-bit and FEBE in the C-bit parity format.

Full bit error rates are measured and analyzed including error detection for pseudorandom data patterns of $2^{(6, 9, 11, 15, 20, \text{or } 23)}$-1 and fixed length repeating data patterns (up to 24 bits).

The DS3 receiver also monitors status conditions such as BLUE signal detection, IDLE signal detection, Loss Of Signal (LOS) condition, Out Of Frame (OOF) condition, Loss Of Pattern (LOP) condition, X-bit status, and Excess Zero condition.

The DS3 BERT function measures Error Count, Error Seconds, Error Rate, % Errored Seconds, and % Error Free Seconds. The DS3 BERT also measures programmable thresholds such as Dribbling, Bursty, Severely and Consecutive Severely Error Seconds. The DS3 receiver can insert single errors, fixed rate errors (BER 9×10^{-2} to 1×10^{-9}), a burst of errors, and one data error per superframe (1/SF).

In the THRU mode (3) you can remove BPV errors, insert Bit and BPV errors, correct parity, insert parity errors, insert C-bit errors and FEBEs.

The DS3 to DS1 demultiplexer (5 and 6) drops a DS1 signal out of a DS3 signal. Any of the 28 DS1 signals which are multiplexed out can be routed to the DS1-THRU output, or can be analyzed by the DS1 BERT function. The demultiplexer feature also detects and counts seconds for several DS2 (and pseudo-DS2 in C-bit parity format) status conditions, such as Out Of Frame (OOF), all 1s alarm (A1s) detection, and DS2 X-bit status.

The DS1 channel input (7) accepts either an external AMI or B8ZS encoded signal, or an internally demultiplexed DS1 signal (6). The DS1 source signal can be framed or unframed. Framed DS1 data can be the standard DS1 Superframe (SF, or sometimes referred to as D4), the enhanced DS1 Extended Superframe (ESF) format, or the Subscriber Loop Carrier SLC96®.

The DS1 receiver measures full bit error rate, analyzes patterns and detects errors in pseudorandom data patterns $2^{(6, 9, 11, 15, 20, \text{or } 23)}$-1 and fixed length repeating data patterns (up to 24 bits). The DS1 receiver also monitors DS1 status conditions such as Yellow alarm, all 1s alarm (A1s) detection, Loss Of Signal (LOS) condition, Out Of Frame (OOF) condition, Loss Of Pattern (LOP) condition, and Excess Zero condition.

The DS1 BERT function measures Error Count, Error Seconds, Error Rate, % Errored Seconds, and % Error Free Seconds. The DS1 BERT also measures programmable thresholds such as Dribbling, Bursty, Severely, and Consecutive Severely Error Seconds.

SLC96 is a registered trademark of AT&T.

The DS1 receiver can insert single errors, fixed rate errors (BER), a burst of errors, or one error per superframe (1/SF) into the DS1 THRU data (9).

The DS1 to DS0 demultiplexer (10) drops a 64 Kbit/second DS0 signal out of a DS1 input, which can be external or internal. The DS0 output can be digital (at DS0 OUT) or analog (at VF OUT).

2.5 SIGNAL ANALYSIS CARD

The signal analysis card measures analog characteristics of DS1 or DS3 signals, including peak positive and negative voltage, average pulse width and pulse symmetry.

Here's how the measurements are made:

- A zero baseline is established, so the peak positive and negative voltages are measured against that zero, and not just ac zero.
- Pulse width is measured at 25%, 50% and 75% of the pulse amplitude. From these measurements, pulse symmetry is calculated and these calculations give you an approximate comparison of the power in positive pulses to power in negative pulses.

Figure 2.7 is a block diagram of the Signal Analysis Card.

The input can be live traffic, pseudorandom test patterns, or repeating patterns. Measurements will be most accurate using a 1010 pattern, least accurate with an all 1s pattern.

When signal analysis is chosen, the DS3 and DS1 signals are measured alternately, at the rate of about 1 second per signal. During that 1-second measurement cycle, the signal analysis circuit finds baseline zero, not just ac zero, but where you would put baseline zero if you looked at the scope display. It also locates the trigger point, finds + and - peaks, measures the required pulse widths, computes the pulse symmetry, and sends all this data to the CPU of the AT 9000 Analyzer.

The bipolar signal is switched to the comparator with a signal from the CPU. However, before the bipolar signal gets to the comparator it is duplicated, and one signal is delayed 10 nanoseconds for the DS3 signal and 30 nanoseconds for the DS1 signal.

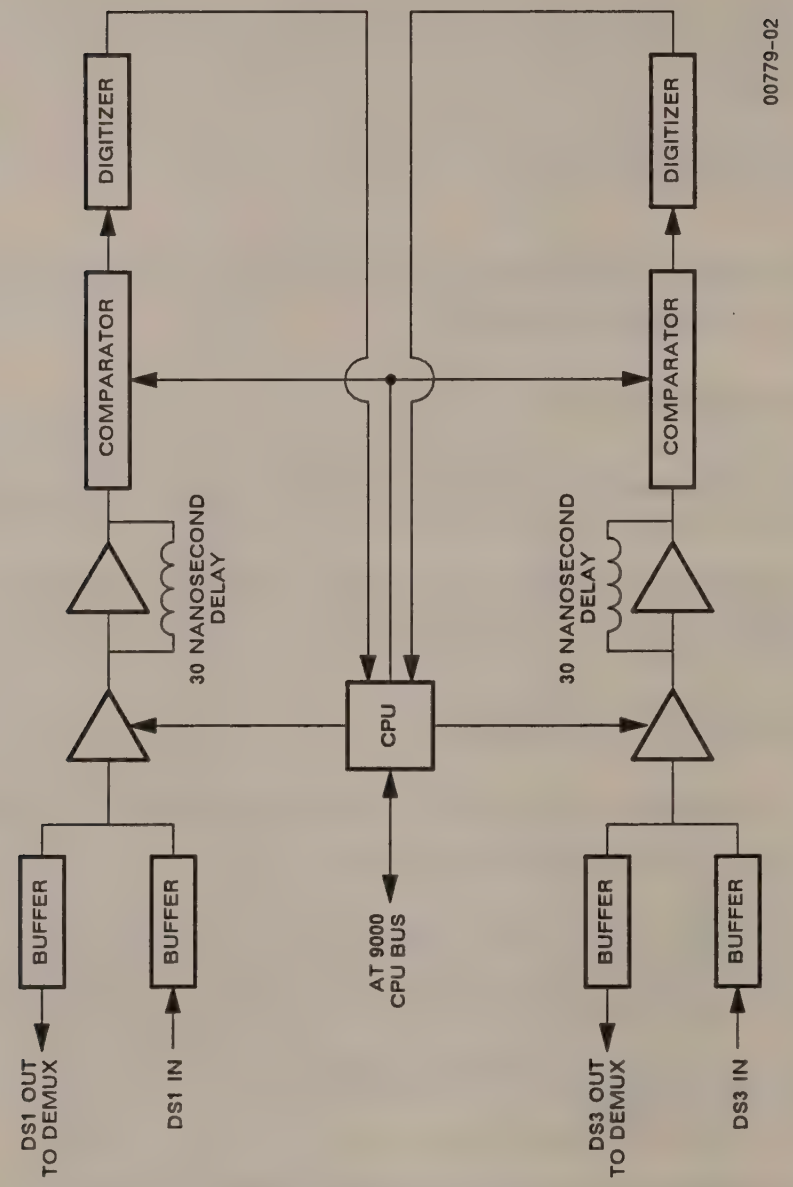

Figure 2.7. Signal Analysis Card Block Diagram

The trigger point, that is, the point in time when the measurement sequence starts, is determined by the software. In either case (DS1 or DS3), the trigger point on the leading, original pulse starts the sweep circuit which in turn triggers the actual pulse measurement on the trailing, delayed pulse. The pulse measurement starts 10 nanoseconds after the trigger for DS3 pulse and 30 nanoseconds after the DS1 pulse.

See Figure 2.8 for an example where the measurement to be made is with the pulse width at 25% of pulse amplitude on a DS3 pulse.

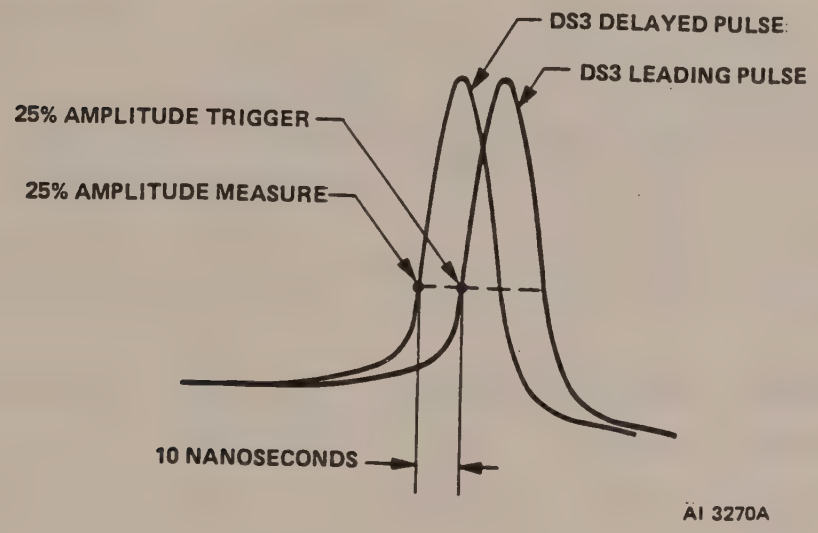

Figure 2.8. DS3 Trigger and Measurement Points

Input signals are compared to ROM stored waveform templates from Bell Compatibility Bulletin 119 and Publication 62508. You'll see PASS or FAIL for ± peak volts, pulse symmetry, and ± pulse width. Figure 2.9 is a typical DS1 Signal Analysis display.

The signal analysis option allows unattended long-term line monitoring. At the end of the test you can check the printout to determine if signal exceeded limits.

Just to make sure FAIL is really FAIL, potential measurement errors--signal losses in monitor jacks and cables--are added to the standard templates on the plus (PASS) side.

```
REMOTE (2-SA2)>

REMOTE (2-SA2)>run

REMOTE (2-SA2)>stop

REMOTE (2-SA2)>summary

                              DS1 Signal Analysis              ALARMS CLEAR
-----------------------------------------------------------------------------
10:25:26.82/-8  SA AT 9000 ATLANTA GA       Slot 2 SA2              DS1 In:  DSX
END OF TEST RESULTS                         Timer: 00:00:02
-----------------------------------------------------------------------------
DS1:                 ---Current---   Hist                      ---Current---   Hist
      +Peak Volt   =  pass  3.33v                -Peak Volt   =  pass  -3.24v
      +75% Width   =  pass  304ns                -75% Width   =  pass  294ns
      +50% Width   =  pass  327ns                -50% Width   =  pass  315ns
      +25% Width   =  pass  350ns                -25% Width   =  pass  338ns

      Symmetry .....  pass  0.4dBx               Level .........  pass  1.0dBx

         0 failures during test

                                                                        00846
```

Figure 2.9. Typical DS1 Signal Analysis Screen

Peak amplitude is measured to 5% accuracy for DSX1 and DSX3; ±10% accuracy for the DS3-HI, DSX1-MON and DSX3-MON. The peak voltage failure points are set as follows:

DSX1	<2.28 Vp(-2.2 dB)	or	>3.78 Vp(+2.2 dB)
DSX1-MON	<0.192 Vp(-23.7 dB)	or	>0.432 Vp(-16.7 dB)
DSX3	<0.34 Vp(-4.2 dB)	or	>0.89 Vp(+4.2 dB)
DSX3-MON	<0.028 Vp(-25.9 dB)	or	>0.102 Vp(-14.6 dB)
DS3-HI	<0.57 Vp(+0.3 dB)	or	>1.44 Vp(+8.4 dB)

Pulse width measurement accuracy is ±10%. Failure points for pulse width measurements are set 10% below the minimum and 10% above the maximum pulse widths specified by CB119. A total of six pulse widths are measured in the PASS/FAIL comparison test.

This chart lists the pulse width failure points for each level:

Signal Type	Width Point	CB119 Low FAIL	CB119 Lower Limit	CB119 High Limit	CB119 High FAIL
DSX1	25%	270 ns	300 ns	442 ns	468 ns
DSX1-MON	50%	270 ns	300 ns	406 ns	447 ns
	75%	217 ns	241 ns	368 ns	405 ns
DSX3	25%	9.6 ns	10.7 ns	26.8 ns	29.5 ns
DSX3-MON	50%	7.2 ns	8.0 ns	16.7 ns	16.7 ns
	75%	4.8 ns	5.3 ns	10.0 ns	11.0 ns
DS3-HI	25%	10.4 ns	11.6 ns	15.3 ns	16.8 ns
	50%	9.1 ns	10.1 ns	12.3 ns	13.5 ns
	75%	6.4 ns	7.1 ns	10.8 ns	11.9 ns

Bell's Compatibility Bulletin CB-119 specifies that pulse symmetry must be 0 dB ± 0.5 dB. Symmetry measurement error can be 1.0 dB for the PASS/FAIL indicators. Failure will be indicated with a ratio greater than 1.5 dB for DSX1, DSX3, and DS3-HI. For DS1 and DS3 Monitor inputs, symmetry FAIL is indicated for a ratio greater than 2.0 dB. Pulse symmetry is displayed in dB format and is calculated using:

$$10 \log [(+Vp)^2 (+50\% \text{ width}) / (-Vp)^2 (-50\% \text{ width})]$$

2.6 REAL-TIME CLOCK

Figure 2.10 is a block diagram of the real-time clock.

The real-time clock, in addition to supplying the analyzer's timing provides the analyzer with NV-RAM and a power-on reset capability, and RS-232 and GPIB interface.

2.7 CPU CARD

Figure 2.11 is a block diagram of the CPU. Most of the circuit is standard IC modules. For a detailed discussion of the 80286 Microprocessor and the AT Compatible Chip Set, refer to the VLSI Technology PC/ST-compatible Chip Set Users Manual.

The CPU also has dynamic RAM, EPROM and bus arbitration logic.

2.8 DS3 2x2 CARD (Dual DS3 Transmit/Receive Card)

The card has two DS3 transmit and two DS3 receive channels. It does not demultiplex the signal and there are no THRU connectors.

2.8.1 Transmitter

Figure 2.12 is a block diagram of the DS3 2x2 transmitter. The DS3 2x2 card has two independent transmitters, Channel 1 and Channel 2. In the text, Channel 1 reference designators are referred to first, with Channel 2 reference designators in parenthesis. Circuit components that are common to both channels stand alone.

The source of the DS3 clock can be U23, the internal temperature-compensated crystal oscillator (TCXO), or an external clock source. Both clock pulse sources are mounted on the 2x2 card. Which clock the operator chooses depends on what kind of test he is running.

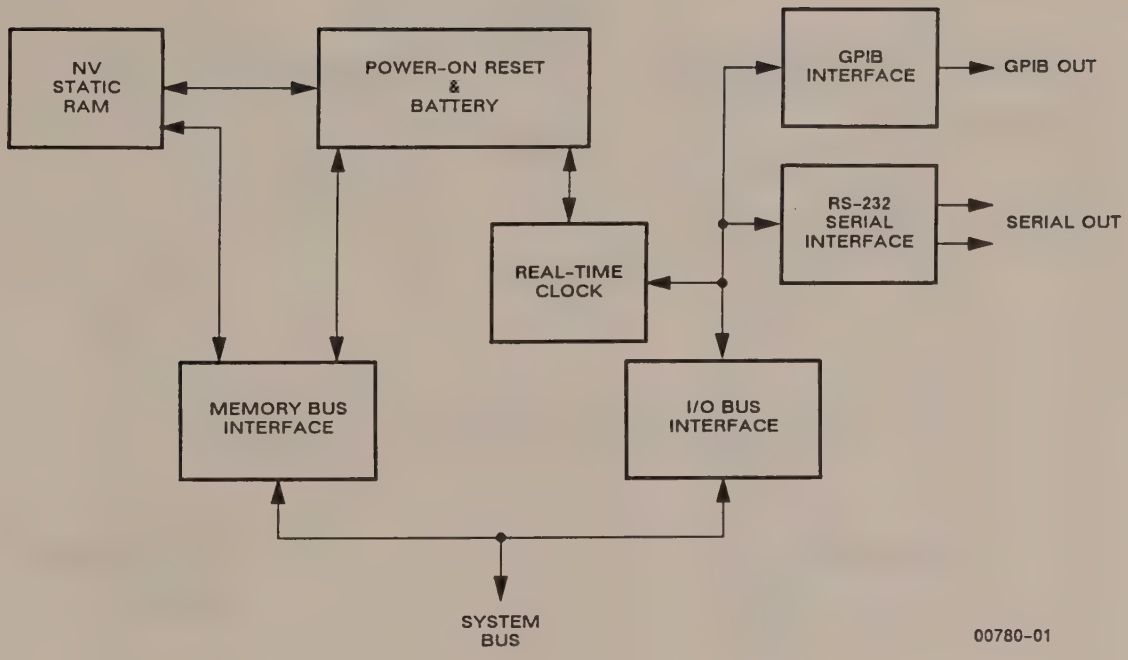

Figure 2.10. Real-Time Clock Block Diagram

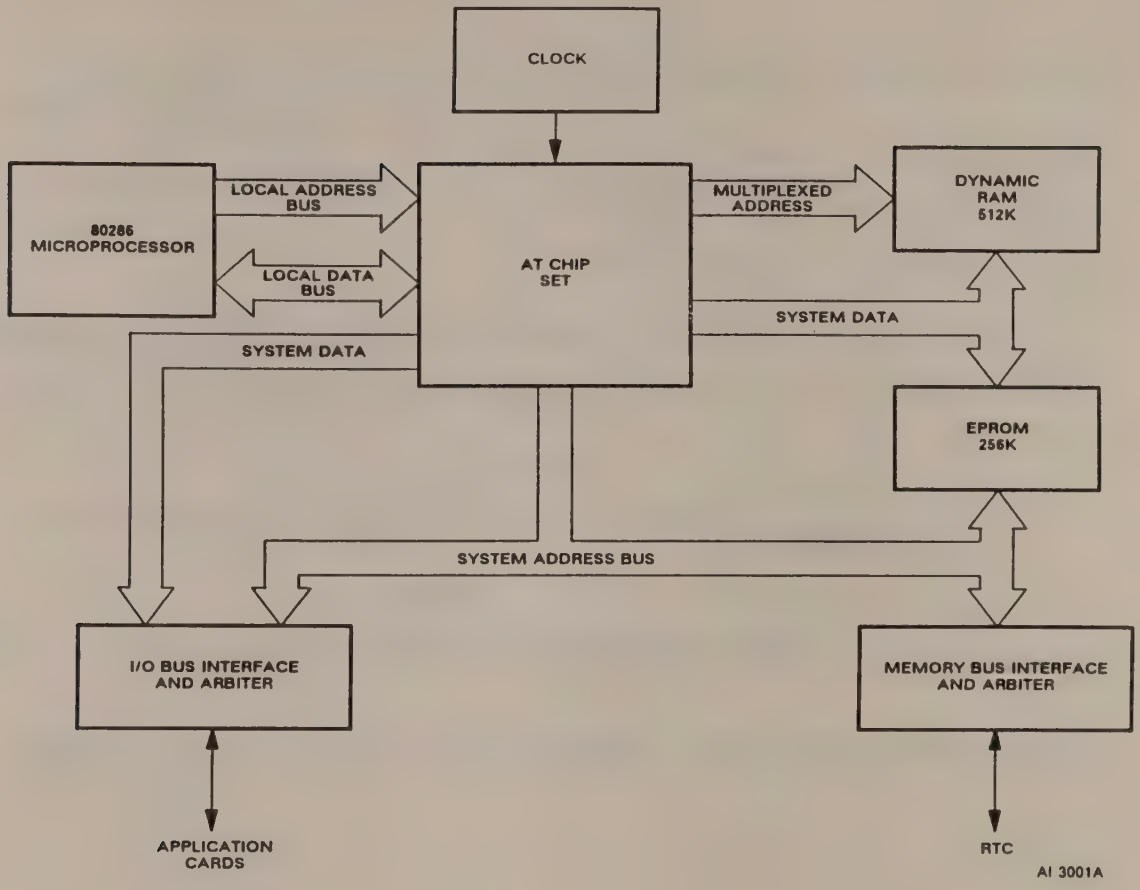

Figure 2.11. CPU Block Diagram

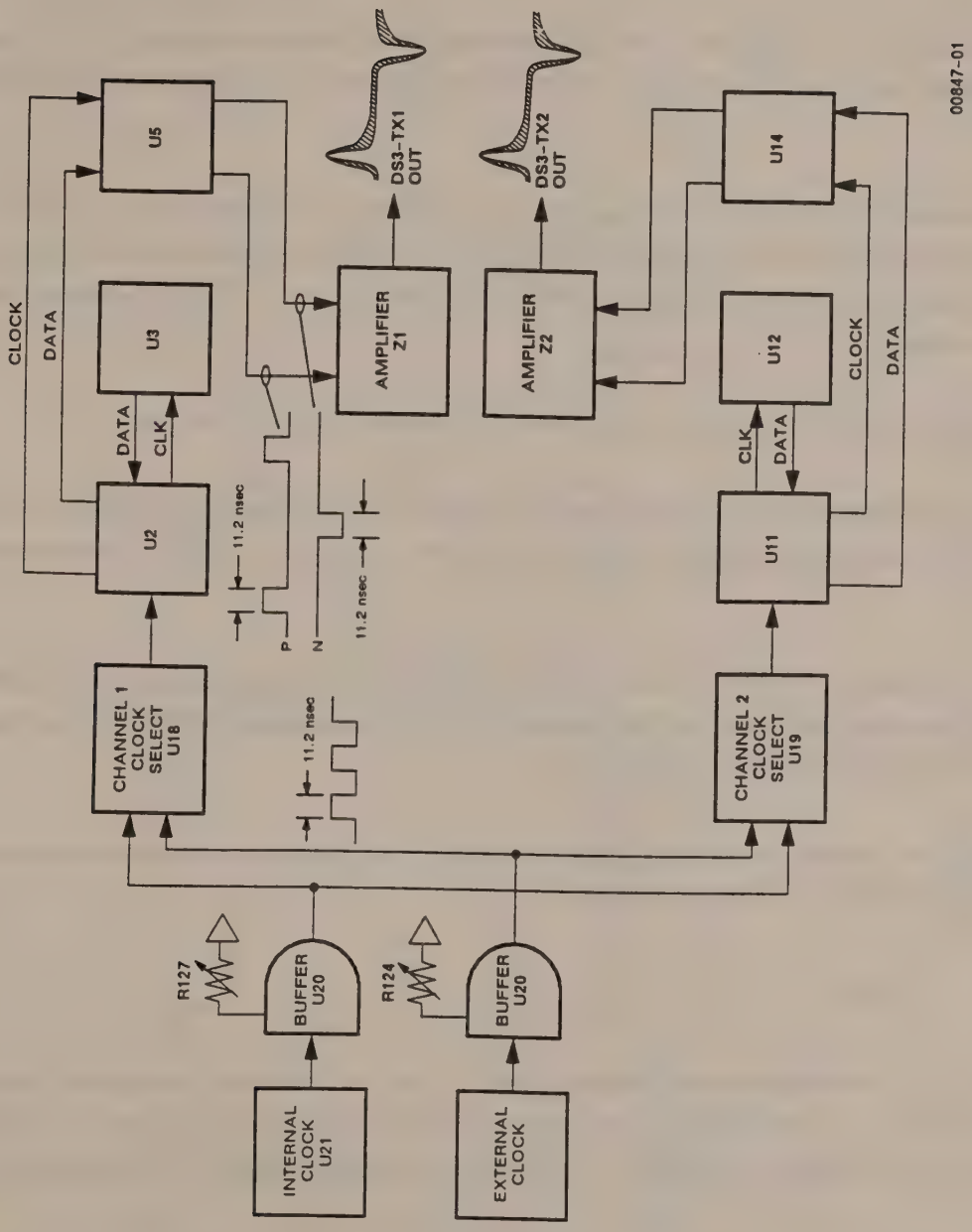

Figure 2.12. DS3 2x2 Transmitter Block Diagram

The output of buffer U20, properly tuned with potentiometer R127, is a 44.736 MHz clock pulse with a 50/50 duty cycle. (Procedures for making this adjustment are given in Chapter 3, Maintenance, Section 3.3.3.2.)

With the framing off, the clock output from the clock selector U18 (U19) is unchanged by U2 (U11), but, with the framing turned on, the clock input U3 (U12) will have gaps in it corresponding to the framing bit locations.

The output of U3 (U12) depends on the data pattern the operator has set into the analyzer. A fixed data pattern of all 1s would give you a continuous high output dc level, a 1010 data pattern will give 44.8 ns period square wave and a pseudorandom bit sequence (PRBS) pattern will give you a random positive-going and negative-going pattern.

Exactly how the PRBS pattern looks depends on how the operator has triggered his scope.

The shape of the data signal from U2 (U11) to U5 (U14) depends on the data pattern set into the analyzer, but, for instance, a 1010 pattern should give you the same waveform at the output of U2 (U11) as at the output of U3 (U12).

U5 (U14) produces two streams, or rails, of data - p data and n data ("p" for positive and "n" for negative). The p data stream goes positive on every other incoming "1"; the n data stream goes negative on every other incoming "1" the p data stream didn't go positive on.

These two data streams go to amplifier Z1 (Z2). Amplifier Z1 (Z2) combines the two data streams and produces a bipolar signal at DS3-TX1 or DS3-TX2.

2.8.2 Receiver

Figure 2.13 is a block diagram of the DS3 2x2 receiver. The DS3 2x2 card has two independent, identical receivers, Channel 1 and Channel 2. In the text, Channel 1 reference designators are referred to first, with Channel 2 reference designators in parenthesis. Circuit components that are common to both channels stand alone.

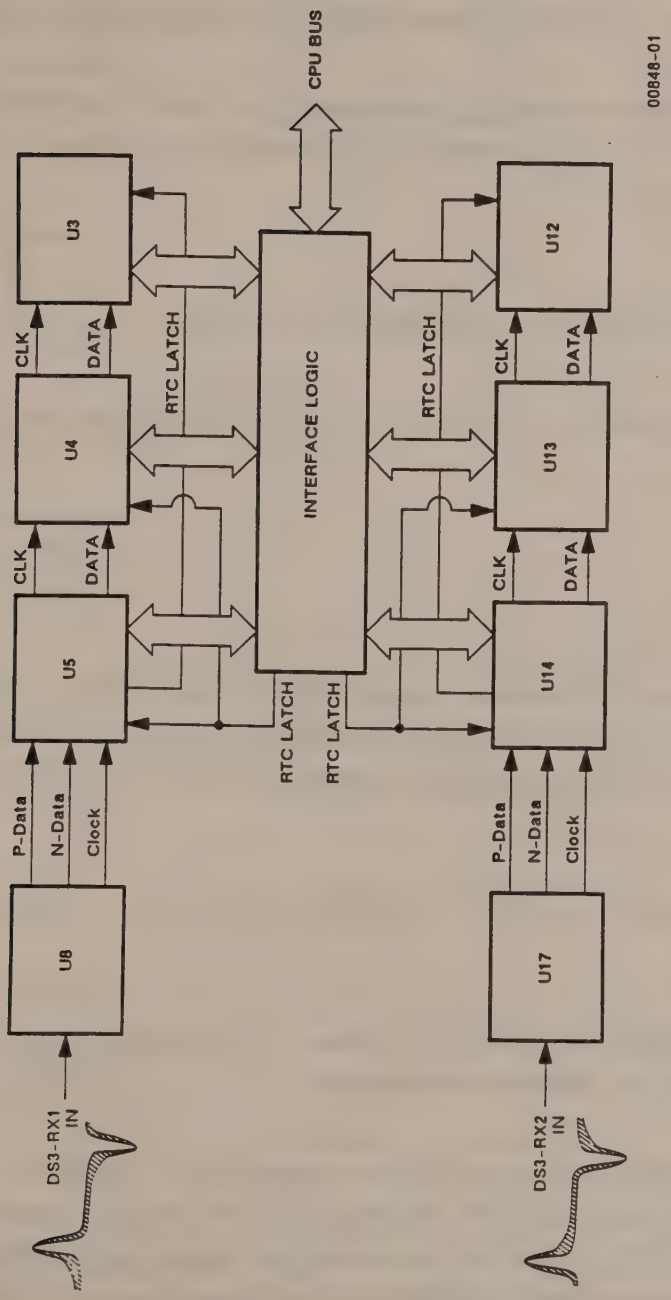

Figure 2.13. DS3 2x2 Demux Block Diagram

The DS3 2x2 receiver analyzes DS3 signals. Each channel can make the same DS3 error and status measurements as the DSS section of demux card discussed earlier. After the clock and data is recovered by U8 (U17), the channel can measure bipolar-violations, framing errors and bit errors and alarm conditions.

The error data and status signals are latched on a 50-millisecond internal signal through the microprocessor bus from the real-time clock card. The CPU card configures the DS3 channels and reads error count and status through the microprocessor I/O bus.

2.9 DS1 2x2 CARD (Dual DS1 Transmit/Receive Card)

This card has two DS1 transmit and two DS1 receiver channels. It does not demultiplex and there are no THRU connectors.

2.9.1 Transmitter

Figure 2.14 is a block diagram of the transmitter channel of the DS1 2x2 card. There are two independent, identical Channels, 1 and 2. In the text, reference designators for Channel 1 are used first, reference designators for Channel 2 are in parenthesis. Reference designators of components that are common to both channels stand alone.

The DS1 clock source, internal or external, is at 1.544 MHz. Which source you use depends on which measurement you are taking.

With the framing off, the output pulse of U3 (U13) is unchanged. With framing on, you will see gaps in the clock pulse input to U4 (U14) corresponding to the framing bits.

The output of U4 (U14) depends on the data pattern the operator has set into the analyzer. For example, a fixed data pattern of all 1s would give you a continuous high output dc level; 1010 data pattern will give a 1296 ns period square wave and a PRBS pattern will give you a random positive-going and negative-going pattern. (Exactly how the PRBS pattern looks depends on how the operator has triggered his scope.) Which data pattern you use depends on which test you are making.

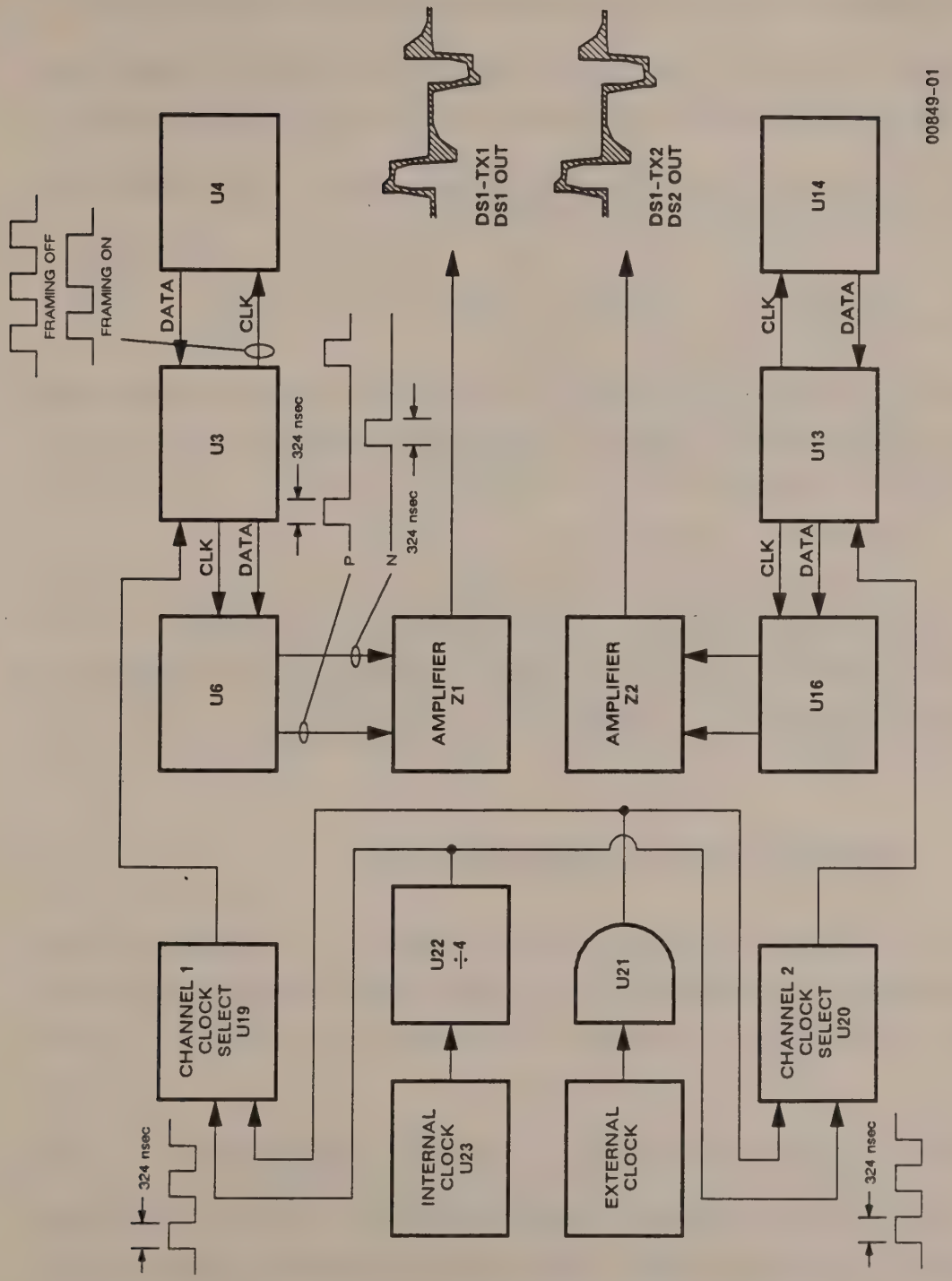

Figure 2.14. DS1 2x2 Transmitter Block Diagram

The data signal from U3 (U13) to U6 (U16) again depends on the data pattern set into the analyzer.

U6 (U16) produces two streams, or rails, of data. The p data stream goes positive on every other incoming "1"; the n data stream goes POSITIVE on every other incoming "1" the p data stream didn't go positive on.

These two data streams go to amplifier Z1 (Z2) where they are combined into the familiar bipolar signal.

2.9.2 Receiver

Figure 2.15 is a block diagram of the DS1 2x2 receiver. The DS1 2x2 card has two independent, identical receivers, Channel 1 and Channel 2. In the text, Channel 1 reference designators are referred to first, with Channel 2 reference designators in parenthesis. Circuit components that are common to both channels stand alone.

The DS1 2x2 receiver analyzes DS1 signals. Each channel can make the same DS1 error and status measurements as the DS1 section of the demux card discussed earlier. After the clock and data is recovered by U8 (U18), the channel measures bipolar-violation, framing errors and bit errors. The error data and status signals are latched on a 50-millisecond internal signal through the microprocessor bus from the real-time clock card. The CPU configures the DS3 signal and reads error count and status through the microprocessor I/O bus.

2.10 DS3 TWO-POINT CARD (Dual DS3 Receiver)

Figure 2.16 is a block diagram of the DS3 two-point receiver. The DS3 two-point card has two independent identical receivers, Channel 1 and Channel 2. In the text, Channel 1 reference designators are referred to first, with Channel 2 reference designators in parenthesis. Circuit components that are common to both channels stand alone.

The DS3 two-point receiver analyzes DS3 signals. Each channel can make the same DS3 error and status measurements as the DSS section demux card discussed earlier. After the clock and data is recovered by U8 (U17), the channel measures bipolar violations, framing errors and bit errors. The error data and status signals are latched on a 50-millisecond internal signal through the microprocessor bus from the real-time clock card. The CPU configures the DS3 channels and reads error count and status through the microprocessor I/O bus.

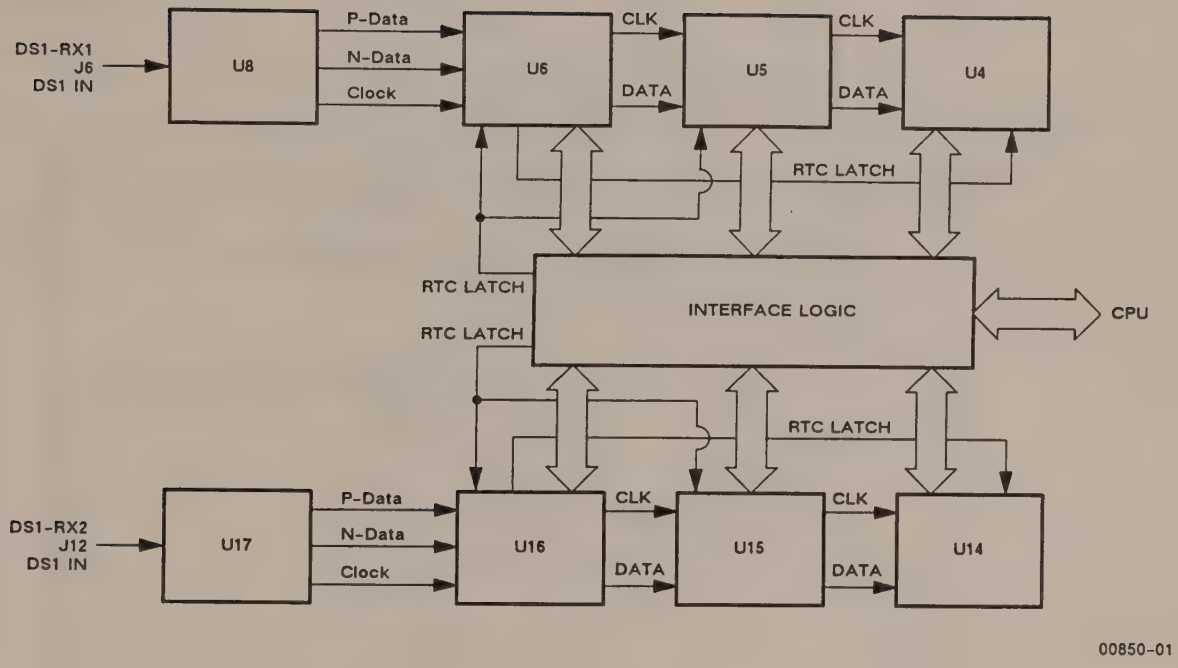

Figure 2.15. DS1 2x2 Receiver Block Diagram

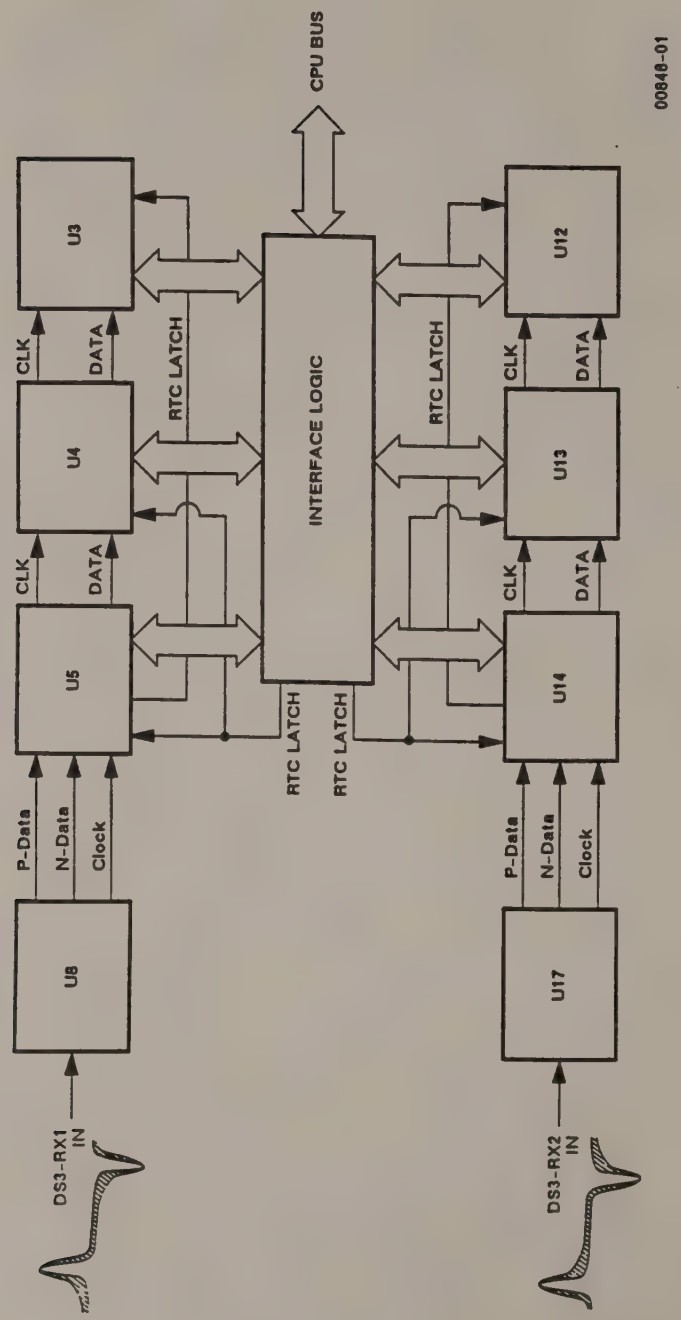

Figure 2.16. DS3 Two-point Receiver Block Diagram

2.11 DS1 TWO-POINT CARD (Dual DS1 Receiver)

Figure 2.17 is a block diagram of the DS1 two-point receiver. The DS1 two-point card has two independent, identical receivers, Channel 1 and Channel 2. In the text, Channel 1 reference designators are referred to first, with Channel 2 reference designators in parenthesis. Circuit components that are common to both channels stand alone.

The DS1 two-point receiver analyzes DS1 signals. Each channel can make the same DS1 error and status measurements as the DS1 section of the demux card discussed earlier. After the clock and data is recovered by U8 (U17), the channel measures bipolar violations, framing errors and bit errors. The error data and status signals are latched on a 50-millisecond internal signal through the microprocessor bus from the real-time clock card. The CPU configures the DS1 signal and reads error count and status through the microprocessor I/O bus.

The DS1 bipolar output goes through the CPU card to the serial output.

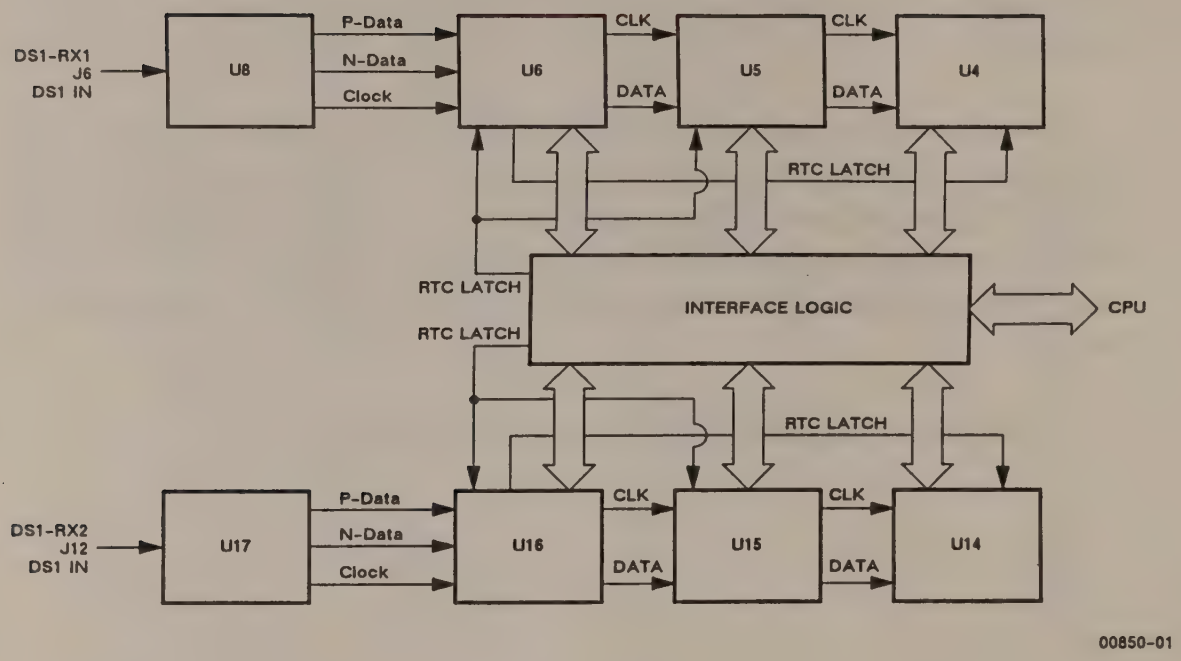

Figure 2.17. DS1 Two-point Receiver Block Diagram

CHAPTER 3
MAINTENANCE

3.1 INTRODUCTION

The AT 9000 Analyzer is durable and reliable and requires no preventive maintenance other than cleaning fan filters occasionally. However, once a year the analyzer should be inspected and calibrated by a representative of Scientific-Atlanta. Look on the last page of this section for the address and telephone number of the Scientific-Atlanta service center nearest you.

This section tells you how to find defective printed circuit cards. Some cards can be repaired, and you will be told exactly how, but cards or components beyond repair must be replaced with identical new ones from Scientific-Atlanta. Ordering information is in Chapter 4.

Before you start repairing a defective card, read the theory of operation on that card, in Chapter 2, and review the schematic of that card, in Chapter 5.

This chapter starts with the basic steps to follow when the AT 9000 is not working. You will start by looking for the most general problems and working toward the most specific problems. You'll need this equipment as a minumum:

- Digital Volt Meter [DVM] Hewlett-Packard Model 3465A or equivalent
- Tektronix Model 2465 Dual-Trace Oscilloscope or equivalent
- Hewlett-Packard Frequency Counter, Model HP5316A, or equivalent
- Scientific-Atlanta Card Extender, Part Number 327934
- Scientific-Atlanta A931 Waveform Test Set
- Tektronix P6201 FET Probe

- Variable power supply, Hewlett-Packard Model 6236A, or equivalent
- 26 dB DS3 pad, Scientific-Atlanta Part Number 309709
- DS1 to BNC adapter, Scientific-Atlanta Part Number 456272
- 27 dB DS1 cable, Scientific-Atlanta Part Number 459372
- DTA/DAS long test cable, Scientific-Atlanta Part Number 306159

Be sure this test equipment is calibrated and working properly. You'll also need a 75-ohm BNC feed-through terminator, twisted-pair cables, coaxial cables and a 100-ohm differential terminator. You can easily make the terminator. Here's a sketch:

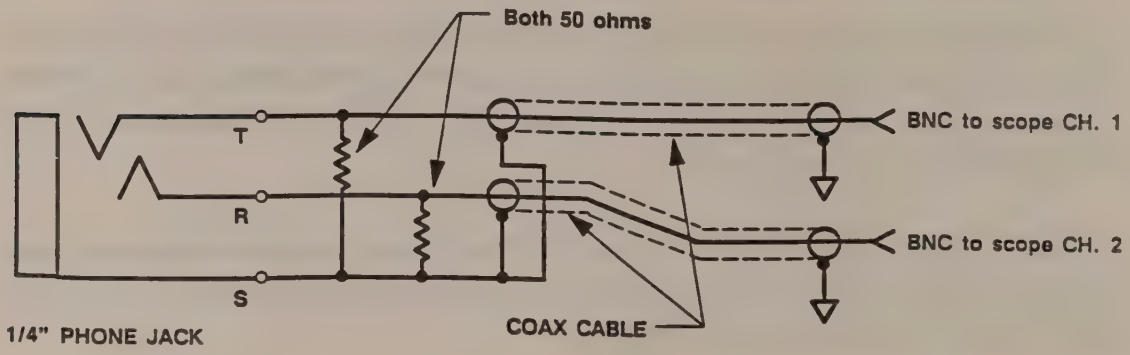

AI 3507A

The bare-bones version of an AT 9000 Analyzer includes a mothercard, a central processing unit (CPU) card (two CPUs, if there are more than six other cards installed) and a real-time clock.

You will be using two kinds of commands, **system** and **function**.

System commands are less specific than function commands. For example, the command "SYSTEM" will produce a display of system parameters.

Function commands are specific. Example: **FRAME CPAR** is a specific command for C-bit parity framing.

The commands are in English and the general form is:

REMOTE>COMMAND <address><parameter list><CR>

where REMOTE> is the serial interface prompt and the **bold** commands are the commands you type. **Address** is the location the command goes to, **parameter list** is the specific function.

Regardless, system or function, each command must have an address. For example, in the command **REMOTE> ADDR 7-TX1** the address is 7-TX1. Now you are dealing through the serial interface to slot 7, which contains transmitter 1.

So, for example, to set up our transmitter in slot 7 for a C-bit parity framing output, enter:

REMOTE> FRAME 7-TX1 CPAR <CR>

where **7-TX1** is the address, **FRAME** is the COMMAND name and **CPAR** is the entry from the <parameter list>.

Furthermore, once you enter this command, you don't have to repeat the address for subsequent commands for this port. You can now command FRAME CPAR, or any other commands in the parameter list, to the transmitter in slot 7 without repeating the address.

To extend our example, we can insert parity errors at the rate, for instance, of 1.00E-06 in the DS3 transmitter in slot 7 by commanding (typing):

ERRORS PARITY BER 1E-6

Chapter 5 of the "AT 9000 Operator's Manual" is a detailed description of each command and the parameter choices available in the Remote Command Library. In that chapter, and here in Figure 3.1, is a Quick Reference to commands and parameters.

Remote Controller Command Quick Reference

Command Name	Type	Description
ADDR	system	Selects application by location.
ALARMS-RST	receiver	Clears report alarm field.
BITS-DISPLAY	E1 demultiplexer	Displays the received E1 signaling bits.
BYE	system	Gives system prompt and stops automatic reporting.
CLOCK	transmitter	Selects transmitter clock.
CMD-ERROR	system	Reports system response to operator errors.
CODE	receiver transmitter	Codes DS1 Thru data. Codes DS1 data.
CONNECTOR	E1 receiver	Selects terminate or bridge for the E1 connector.
CONN-TYPE	E1 receiver	Enables either the BNC or Bantam E1 connector.
CRC4	E1 transmitter	Enables CRC4 encoding in time slot 0 of the E1 transmitted output.
DATE	system	Sets date.
DCL	system	Clears communication buffers.
DELETE	system application card	Deletes preset test.
DIR	system	Lists cards installed.
DMUX	demultiplexer	Selects channel to demultiplex.
DS2-SCAN	demultiplexer	Shows frame format of all DS2 channels in received DS3 signal.
E-BITS	E1 transmitter	Programs E-bits in E1 transmitted output.
ECHO	system	Serial communications character echo on/off.
ERRORS	receiver transmitter	Inserts Thru data errors. Inserts data errors.
ERR-BEEP	system	Beeps for detected Severely Errored Second (SES).
ERR-SEC	system	Selects error second algorithm.

Figure 3.1. QUICK-LOOK Commands (Sheet 1)

Command Name	Type	Description
FACILITY	receiver	Prints equipment description on test reports.
FORCEPRINT	system	Forces a report to printer port.
FRAME	transmitter	Selects framing.
FRAME-ALARM	E1 transmitter	Enable/disable frame alarm in E1 transmitted pattern output.
HELLO or HI	system	Displays log on message.
HELP or ?	system application cards	Lists commands.
INPUT	demultiplexer	Selects signal input source.
INST-RST	system	Resets system to defaults.
INVERT	E1 receiver E1 transmitter	Inverts transmitted/received E1 pattern.
LEVEL	receiver transmitter	Sets DS3 input level. Sets DS3 output level.
LEVEL-XCON	system	Sets receivers and transmitters to cross-connect (DSX) level.
LOCATION	system	Prints equipment on test reports.
LOOPBACK	transmitter	Selects special DS1 signaling scheme.
LOOPCODE	transmitter	Selects special DS1 signaling pattern for loopback.
MEAS-MODE	system	Changes system measurement mode from Standard to G.821.
MULTIFRAME-ALARM	E1 transmitter	Enables/disables multiframe alarm in E1 transmitter output.
NVR	system	Updates non-volatile RAM.
OVERVIEW	system	Lists BERTS receivers.
PATTERN	transmitter	Selects output data pattern.
PAUSE	system	Suspends all tests.
PREFERENCE	receiver	Selects DS3 M13 or CPAR frame for BLUE or IDLE patterns.
PRESETS	system application card	Lists preset tests.

Figure 3.1. QUICK-LOOK Commands (Sheet 2)

Command Name	Type	Description
PRINT	receiver signal analysis	Prints test summary for a receiver.
PRINT-DEV	system	Designates printer port.
RECALL	system application card	Recalls a preset test.
REFRESH	receiver	Automatically sends chosen data to target.
REMOTE-DEV	system	Sets remote device.
REPORT	receiver signal analysis	Automatically sends chosen data to target.
RERUN	receiver signal analysis	Restarts test.
RESULTS	receiver signal analysis	Requests test totals.
RESUME	system	Starts test stopped with PAUSE.
REVISION	system	Lists core and card versions.
RUN	application card	Starts test.
SA-BITS	E1 transmitter	Programs SA-bits in E1 transmitted output.
SAVE	system application card	Saves setup.
SET-RESULTS	receiver	Sets up results report.
SETUP	application card	Lists setup data.
SHOWTIME	system	Shows date and time of day.
SIGNALING	DS1 receiver	Shows DS1 signaling bits.
	E1 transmitter	Programs signaling bits for all DS0 channels in E1 time slot 16.
SINGLE	transmitter	Inserts single error from all transmitters.
SQUELCH	system	Squelches error event reporting.
STATUS	receiver	Lists test status.
STOP	receiver	Stops test.
SUMMARY	receiver signal analysis	Lists test summary.

Figure 3.1. QUICK-LOOK Commands (Sheet 3)

Command Name	Type	Description
SYSTEM	system	Lists setup data.
TEST-TYPE	receiver	Selects test category.
THRES-BIT THRES-CRC4 THRES-CRC6 THRES-FBIT THRES-FRAME THRES-MULTIFRAME THRES-PAR	receiver	Sets error threshold.
THRU	receiver	Chooses Thru data.
TIME	system	Sets time of day.
TIMELINE	system	Reports time and date every 30 minutes.
TIMER	receiver	Sets test length.
TS16	E1 transmitter	Enable/disable time slot 16 in E1 transmitted output.
TX-BUSY	transmitter	Marks transmitter status in directory.
TX-OUT	transmitter	Turns transmitter output on/off.
XBIT	transmitter	Sets framed DS3 X-bit value.
X-BITS	E1 transmitter	Programs X-bits in E1 transmitted output.
YELLOW	transmitter	Sends DS1 yellow alarm.
ZERO-PRBS20	system	Selects DS1 zero suppression.
? or HELP	system application cards	Lists commands.
ctrl R	system	Repeats last command.
ctrl Z	system	Stops automatic reporting.

Figure 3.1. QUICK-LOOK Commands (Sheet 4)

3.2 EXTERNAL TROUBLESHOOTING

This section tells you how to start troubleshooting before taking the cover off the analyzer. All you know is that "something" is wrong.

WARNING

THIS ANALYZER USES DANGEROUS VOLTAGE. FOLLOW THESE PRECAUTIONS BEFORE TURNING ON THE POWER TO PREVENT INJURY.

- **ANY REPAIR OR ADJUSTMENT MADE TO THE ANALYZER WITH THE POWER ON SHOULD BE DONE ONLY BY EXPERIENCED TECHNICIANS WHO KNOW THE HAZARDS OF HIGH VOLTAGE.**
- **USE ONLY A THREE-PRONGED POWER CORD TO CONNECT THE ANALYZER TO AC POWER.**
- **WHEN USING AN AUTO-TRANSFORMER, MAKE SURE THE COMMON TERMINAL IS CONNECTED TO THE NEUTRAL POLE OF THE POWER SOURCE.**
- **THE SOCKET OF THE POWER CORD, AND OF ANY EXTENSION CORD, MUST HAVE A PROTECTIVE EARTH GROUND.**
- **WHEN THESE PROCEDURES REQUIRE TAKING OFF THE PROTECTIVE COVER, BE ESPECIALLY CAREFUL!**
- **EVEN IF THE ANALYZER IS UNPLUGGED FROM AC POWER, CAPACITORS ON THE POWER SUPPLY CAN STILL HAVE DANGEROUS VOLTAGE ON THEM.**

First thing, check your serial communications setup, see Figure 3.2.

The AT 9000 uses the Serial Port COM1 (25-pin) RS-232 rear-panel connector to communicate with the rest of the world. Before you turn on the AT 9000 make sure that COM1 parameters are set like this:

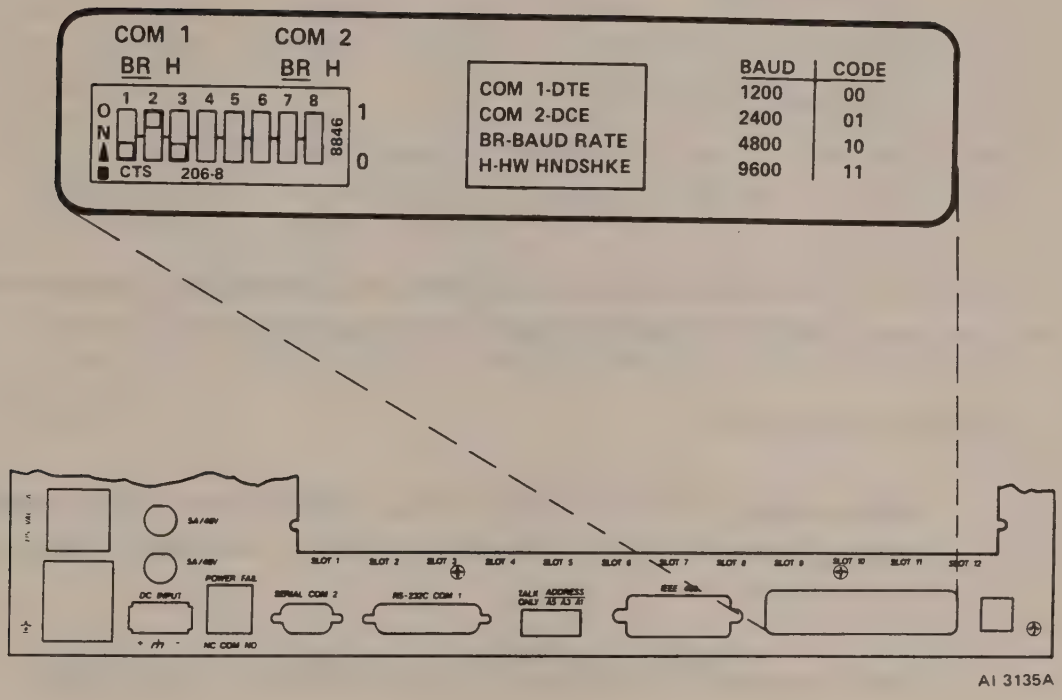

AI 3135A

Figure 3.2. Rear Panel, Serial Port Setup Switches

COM1 Parameters:

- Function: Full duplex DCE
- Baud Rate: 2400 default, 9600, 4800 or 1200 will work
- Word Length: 8 bits
- Parity: None
- Line Terminator: CR or CRLF
- Handshake: on = DTR/DSR with (cntl-q/cntl-s) xon/xoff
  off = (cntl-q/cntl-s) xon/xoff

The AT 9000 will now respond to a carriage return <CR> or carriage return line feed <CRLF> with a remote user prompt (REMOTE). If you see no response on your terminal, type **ECHO ON <CR>**.

Now check the power sources.

Using the ac source. Check that the analyzer is plugged in properly. If the source is controlled by a switch, make sure the switch is on. Check the source voltage at the analyzer's chassis connector and check the fuses.

Using the dc source. Check dc source connections for proper polarity. Check the fuses.

Turn on the analyzer.

The front-panel POWER switch shows a green dot; the sign-on screen appears. The sign-on screen inventory doesn't include either the CPU card or the RTC card, but does include everything else (see Figure 3.3.)

For example, a sign-on screen listing of 7-TX1 DS3-TX tells you there is a DS3 transmitter in slot 7.

The sign-on screen indicates the *particular* configuration of your AT 9000. Figure 3.3 is a sign-on screen of a *typical* AT 9000, which will be the example used in the troubleshooting procedures.

Scientific-Atlanta Model AT 9000 (rev 4.00)
DIGITAL ANALYSIS SYSTEM

Channels Present:

addr	fct	addr	fct	addr	fct	addr	fct
2-SA1	DS3-SA	2-SA2	DS1-SA	3-TX1	DS3-TX	3-TX2	DS1-TX
4-TX1	DS3-TX	4-TX2	DS1-TX	5-TX1	DS3-TX	5-TX2	DS1-TX
6-TX1	DS3-TX	6-TX2	DS1-TX	7-TX1	DS3-TX	7-TX2	DS1-TX
8-RX1	DS3-RX	8-RX2	DS1-RX	9-RX1	DS3-RX	9-RX2	DS1-RX
10-RX1	DS3-RX	10-RX2	DS1-RX	11-TX1	DS3-TX	11-TX2	DS3-TX
11-RX1	DS3-RX	11-RX2	DS3-RX				

Note: type "?" for system command list
type "? <addr>" for command list of addressed channel
type "dir" or "hi" for list of channel addresses

REMOTE>

02796

Figure 3.3. Typical Sign-on Screen

Here's the way you read it: There's a Signal Analysis (SA) card in slot two; there are transmitter (TX) cards in slots three, four, five, six, seven and eleven, and receiver (RX) cards in slots eight, nine, ten and eleven. (The card in slot eleven is a dual transmitter-receiver (TX-RX) card).

Sign-on screen does not appear. Run Diagnostic Test, Section 3.3.18.

Sign-on screen appears. Type **INST-RST**. This resets all the transmitters and receivers to (factory) default, see Figure 3.3.

Screen clears, then reappears with message INSTRUMENT HAS BEEN RESET. Type **DIR**.

Sign-on screen clears, then directory screen appears. See Figure 3.4.

Scientific-Atlanta Digital Analysis System 1988
DIRECTORY OF ANALYSIS FUNCTIONS

Slot #	Function	Address	Status	Slot #	Function	Address	Status
2				3			
	DS3 SIGNAL ANALYSIS .	2-SA1	avail		DS3 TRANSMITTER	3-TX1	avail
	DS1 SIGNAL ANALYSIS .	2-SA2	avail		DS1 TRANSMITTER	3-TX2	avail
4				5			
	DS3 TRANSMITTER	4-TX1	avail		DS3 TRANSMITTER	5-TX1	avail
	DS1 TRANSMITTER	4-TX2	avail		DS1 TRANSMITTER	5-TX2	avail
6				7			
	DS3 TRANSMITTER	6-TX1	avail		DS3 TRANSMITTER	7-TX1	avail
	DS1 TRANSMITTER	6-TX2	avail		DS1 TRANSMITTER	7-TX2	avail
8				9			
	DS3 RECV/DMUX/THRU	8-RX1	avail		DS3 RECV/DMUX/THRU .	9-RX1	avail
	DS1 RECV/DMUX/THRU	8-RX2	avail		DS1 RECV/DMUX/THRU .	9-RX2	avail

Press <RETURN> For More [

Slot #	Function	Address	Status	Slot #	Function	Address	Status
10				11			
	DS3 RECV/DMUX/THRU	10-RX1	avail		DS3 TRANSMITTER	11-TX1	avail
	DS1 RECV/DMUX/THRU	10-RX2	avail		DS1 TRANSMITTER	11-TX2	avail
					DS3 RECEIVER	11-RX1	avail
					DS1 RECEIVER	11-RX2	avail

REMOTE>

AI 3186A

Figure 3.4. Typical Directory Screen

3.2.1 Troubleshooting Procedure

Using Figure 3.5, our typical configuration, we will check every transmitter with every receiver, DS1 to DS1 and DS3 to DS3. Then we'll check the signal analysis card. You will have to adapt these procedures to fit your particular configuration.

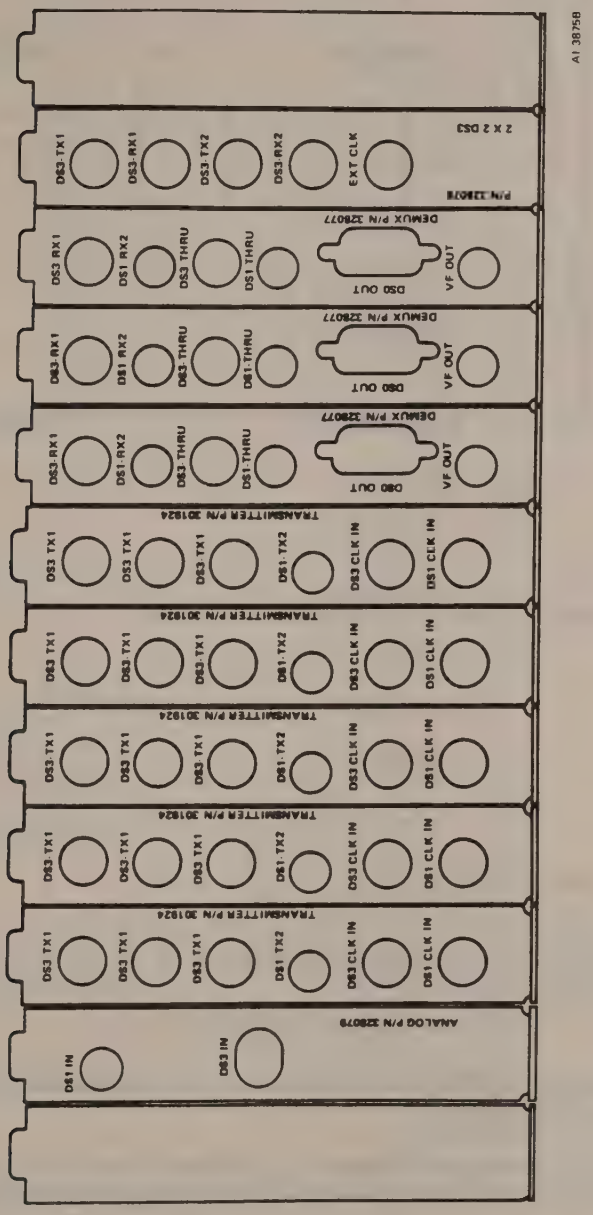

Figure 3.5. Typical Configuration

Here are the combinations of transmitters and receivers you must check. It's a good idea to make a check in the "Check" column, just to keep straight on what you've verified as a good card.

Transmitter/Slot	Receiver/Slot	Check
DS3-TX1/3	DS3-RX1/8	_____
	DS3-RX1/9	_____
	DS3-RX1/10	_____
	DS3-RX1/11	_____
	DS3-RX2/11	_____

Receiver/Slot	Transmitter/Slot	Check
DS3-RX1/8	DS3-TX1/4	_____
	DS3-TX1/5	_____
	DS3-TX1/6	_____
	DS3-TX1/7	_____
	DS3-TX1/11	_____
	DS3-TX2/11	_____

3.2.1.1 DS3 Transmitters and Receivers

1. Connect DS3-TX1 on card 3 to DS3-RX1 on card 8 (see Figure 3.6.)

2. Now type **ADDR 8-RX1<CR> RUN<CR> STOP<CR> STAT<CR>**.

   Screen shows Figure 3.7, and in upper right-hand corner, ALARMS entry shows "CLEAR," Mode: shows "M13 DSX," and Pattern: shows "PRBS15."

3. Repeat this sequence with each DS3 receiver, connecting, in sequence, DS3-TX1 on card 3, with DS3-RX1 on card 9, DS3-RX1 on card 10, DS3-RX1 on card 11, and DS3-RX2 on card 11, and checking the status each time. Make sure you address the receiver and not the transmitter.

   Status readings incorrect (anything but ALARMS CLEAR) for any DS3 receiver. Go to INTERNAL TROUBLESHOOTING, Section 3.3.

   Status is good on all five DS3 receivers. Not only are your DS3 receivers good, so is your DS3 transmitter on card 3.

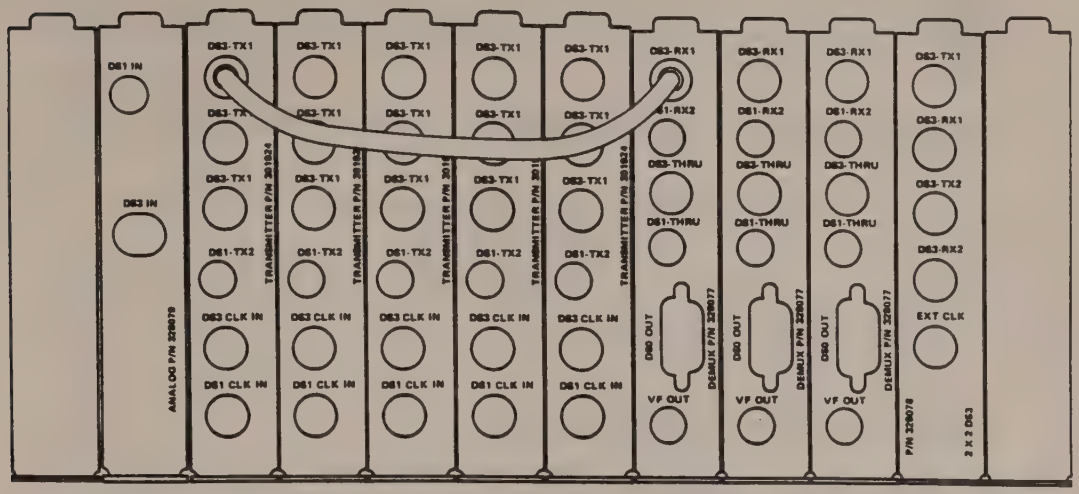

AI3086

Figure 3.6. Transmitter-Receiver Connection

```
REMOTE> ADDR 8-RX1

REMOTE (8-RX1)>run

REMOTE (8-RX1)>stop

REMOTE (8-RX1)>stat

                         DS3 Error Rate Test                    ALARMS  CLEAR
-------------------------------------------------------------------------------
09:38:59  01/17   SA AT 9000    ATLANTA GA    Slot 10 RX1 DS3      Mode:  M13 DSX
END OF TEST STATUS                            Timer: 00:00:02      Pattern:  PRBS15
-------------------------------------------------------------------------------
STATUS          Current    Seconds    #Occur                Current    Seconds    #Occur
Frame Loss ...... no         0          0     Pattern Loss ..... no        0          0
Signal Loss ...... no        0          0     Excess Zeros ..... no        0          0
Blue (AIS) ....... no        0          0     Idle (1100) ....... no       0          0
Power Loss ...... no         0          0     Xbit Alarm ....... no        0          0
Freq.(44.73594)  .. -1ppm

REMOTE (8-RX1)>
```

02855

Figure 3.7. DS3 Error Rate Test Screen

4. Now, connect DS3-RX1 on card 8, in succession, to the top DS3-TX1 on card four (the three DS3 outputs are identical; if one is good, they're all good), card five, card six, card seven, to DS3-TX1 on card eleven, and to DS3-TX2 on card eleven. Check the status each time, being sure you address the receiver, not the transmitter.

   Status readings incorrect for any DS3 transmitter. Go to INTERNAL TROUBLESHOOTING, Section 3.3.

   Status is good on all DS3 transmitters. Your DS3 transmitters and receivers are OK.

3.2.1.2 DS1 Transmitters and Receivers

1. Connect DS1-TX2 of card 3 to DS1-RX2 of card 8.

2. Type **ADDR-8 RX2<CR> RUN<CR> STOP<CR> STAT<CR>.**

   Screen shows Figure 3.8, and in the upper right-hand corner the ALARMS entry shows "CLEAR", Mode: shows "SF AMI," and Pattern: shows "PRBS20."

3. Repeat this sequence with each DS1 receiver, connecting, in sequence, DS1-TX2 of card 3 to DS1-RX2 of card 9 and then to DS1-RX2 of card 10, checking status each time. Make sure you address the receiver, not the transmitter.

   Status readings incorrect for any DS1 receiver. Go to INTERNAL TROUBLESHOOTING, Section 3.3.

   Status readings correct for all DS1 receivers. Your DS1 transmitters and receivers are OK.

4. Check the rest of your DS1 transmitters by connecting DS1-RX2 of card 8 to DS1-TX2 on card 4, then card 5, then card 6, then card 7. Check status each time, and make sure you are addressing the receiver, not the transmitter.

   Status readings incorrect for any DS1 transmitter. Go to INTERNAL TROUBLESHOOTING, Section 3.3.

   Status readings correct for all DS1 transmitters. Your DS1 transmitters and receivers are OK.

3.2.1.3 Signal Analysis DS1

NOTE

Test DS1 and DS3 receivers before you test the signal analysis card so you have a receiver you know is good.

```
REMOTE> ADDR 8-RX2

REMOTE (8-RX2)>run

REMOTE (8-RX2)>stop

REMOTE (8-RX2)>stat
```

DS1 Error Rate Test — ALARMS CLEAR

09:51:50 01/17 SA AT 9000 ATLANTA GA — Slot 8 RX2 DS1 — Mode: SF AMI
END OF TEST STATUS — Timer: 00:00:03 — Pattern: PRBS20

STATUS	Current	Seconds	#Occur		Current	Seconds	#Occur
Frame Loss	no	0	0	Pattern Loss	no	0	0
Signal Loss	no	0	0	Excess Zeros	no	0	0
Yellow Alarm	no	0	0	AIS	no	0	0
Power Loss	no	0	0	Data Channel	n/a		
Freq.(1.544002)	+1ppm						
Slips: Bit	ref	Frame	ref	Frame Slip Rate	ref		

REMOTE (8-RX2)>

02856

Figure 3.8. DS1 Error Rate Test Screen

1. Connect DS1-TX2 of slot 3 to DS1 in slot 2.

2. Type **ADDR 2-SA2<CR> run<CR> stop<CR> summ<CR>.**

   DS1 signal analysis summary screen (Figure 3.9) appears and ALARMS entry shows "CLEAR," DS1 In: shows "DSX," and all tests show "pass."

   Summary readings incorrect, or any of the test readings is "fail." Go to INTERNAL TROUBLESHOOTING, Section 3.3.

   Summary readings are correct and all test readings are "pass." DS1 channel of signal analysis card is OK.

```
REMOTE> ADDR 2-SA2

REMOTE (2-SA2)>summ

                              DS1 Signal Analysis                    ALARMS  CLEAR
-------------------------------------------------------------------------------------
09:30:22  01/18   SA AT 9000   ATLANTA GA   Slot 2 SA2                 DS1 In: DSX
END OF TEST RESULTS                        Timer: 00:00:01
-------------------------------------------------------------------------------------
DS1:              ---Current---      Hist                  ---Current---      Hist
  +Peak Volt    =  pass    3.29v            -Peak Volt    =  pass    -3.26v
  +75% Width    =  pass    292ns            -75% Width    =  pass    290ns
  +50% Width    =  pass    315ns            -50% Width    =  pass    311ns
  +25% Width    =  pass    334ns            -25% Width    =  pass    331ns

  Symmetry ......  pass    0.1dB            Level .........  pass    0.9dB

     0 failures during test


  REMOTE (2-SA2)>
                                                                          02857
```

Figure 3.9. DS1 Signal Analysis Summary Screen

3.2.1.4 Signal Analysis DS3

1. Connect DS3 OUT of card 3 to SA1 of card 2.

2. Type **ADDR 2-SA1<CR> run<CR> stop<CR> summ<CR>**.

   DS3 signal analysis summary screen (Figure 3.10) appears and ALARMS entry shows "CLEAR," DS3 In: shows "DSX," and all tests show "pass."

   Summary readings incorrect, or any of the test readings is "fail." Go to INTERNAL TROUBLESHOOTING, Section 3.3.

   Summary readings are correct and all test readings are "pass." DS3 channel of signal analysis card is OK.

```
REMOTE> addr 2-SA1

REMOTE (2-SA1)>run

REMOTE (2-SA1)>stop

REMOTE (2-SA1)>summ

                              DS3 Signal Analysis                    ALARMS  CLEAR
-------------------------------------------------------------------------------------
 04:15:42  01/18   SA AT 9000   ATLANTA GA   Slot 2 SA1                 DS3 In: DSX
 END OF TEST RESULTS                        Timer: 00:00:00
-------------------------------------------------------------------------------------
DS3:                ---Current---   Hist                  ---Current---   Hist
   +Peak Volt    =  pass          0.05 V   -Peak Volt    =  pass          0.05 V
   +75% Width    =  pass          9 ns     -75% Width    =  pass          10 ns
   +50% Width    =  pass          10 ns    -50% Width    =  pass          11 ns
   +25% Width    =  pass          20 ns    -25% Width    =  pass          21 ns

   Symmetry ...... -1.1 dB                Level ......... 0 dBx

      0 failures during test


   REMOTE (2-SA1)>
```

02797-01

Figure 3.10. DS3 Signal Analysis Summary Screen

3.3 INTERNAL TROUBLESHOOTING

Section 3.2, EXTERNAL TROUBLESHOOTING, gave instructions about isolating the problem down to a particular card or cards. Now, here's how you fix the card.

3.3.1 Removing Circuit Cards

The AT 9000 Digital Analyzer System uses either (or both) ac or dc (optional) power. These procedures apply to either version, see Figure 3.11.

WARNING

THIS ANALYZER USES DANGEROUS VOLTAGE. FOLLOW THESE PRECAUTIONS BEFORE TURNING ON THE POWER TO PREVENT INJURY.

- **ANY REPAIR OR ADJUSTMENT MADE TO THE ANALYZER WITH THE POWER ON SHOULD BE DONE ONLY BY EXPERIENCED TECHNICIANS WHO KNOW THE HAZARDS OF HIGH VOLTAGE.**
- **USE ONLY A THREE-PRONGED POWER CORD TO CONNECT THE ANALYZER TO AC POWER.**
- **WHEN USING AN AUTO-TRANSFORMER, MAKE SURE THE COMMON TERMINAL IS CONNECTED TO THE NEUTRAL POLE OF THE POWER SOURCE.**
- **THE SOCKET OF THE POWER CORD, AND OF ANY EXTENSION CORD, MUST HAVE A PROTECTIVE EARTH GROUND.**
- **WHEN THESE PROCEDURES REQUIRE TAKING OFF THE PROTECTIVE COVER, BE ESPECIALLY CAREFUL!**
- **EVEN IF THE ANALYZER IS UNPLUGGED FROM AC POWER, CAPACITORS ON THE POWER SUPPLY CAN STILL HAVE DANGEROUS VOLTAGE ON THEM.**
- **BE CAREFUL NOT TO SHORT THE NICKEL-CADMIUM BATTERY ON THE REAL-TIME CLOCK CARD.**

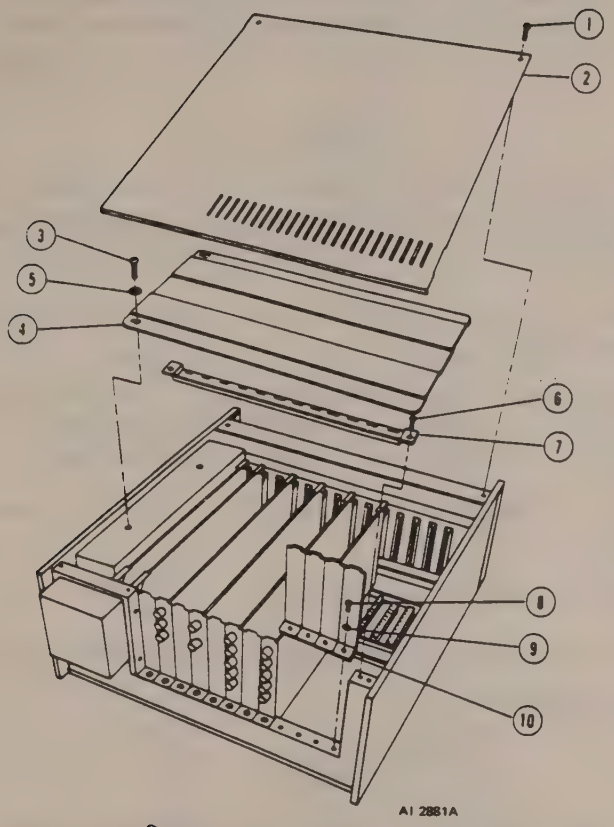

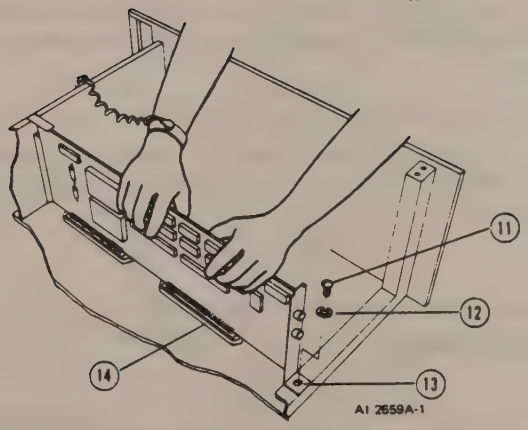

AI 3327A

Figure 3.11. Removing Circuit Cards

CAUTION

Static electricity can damage sensitive circuits. Always wear an anti-static wrist strap when working inside the AT9000 chassis.

1. Turn the power off.

2. Disconnect power cord and remote cables. Take the analyzer out of the rack or bay and put it on a clean work bench or table.

3. Refer to Figure 3.11. Remove two screws (1) and slide cover (2) out two inches towards the back of analyzer. Lift cover off.

   Look for the obvious: Broken wires on printed circuit cards, broken, kinked or disconnected RF or flat cables. Card components that are discolored, bulging, burned, scorched and disconnected. Take care of these obvious problems before you start looking for less obvious ones.

4. Loosen two screws (3) enough to remove card retainer (4); then remove two screws (3) and lockwashers (5).

5. Remove two screws (6) and slotted card retainer (7).

6. If your analyzer has a rear plate, remove screw(s) (8), lockwasher(s) (9), and rear plate (10).

CAUTION

These cards make a pretty tight fit. Be careful about touching components on cards next to the one you are removing.

7. Remove screw (11) and lockwasher (12) from card bracket (13). Pull card straight up, being careful not to bend the connectors (14).

3.3.2 Checking Power Supply

The AT 9000 Analyzer power supply is not repairable. The only symptom you'll have of a power supply failure would be POWER ON LED (on the front-panel POWER switch) not on when you turn on the analyzer or a blank analyzer screen. In this case, remove the power supply module and return it. The last page in this section is a list with the address and telephone number of the Scientific-Atlanta service center nearest you.

The only symptom of power supply *dysfunction* will be when you measure demux voltages in Section 3.3.3 and they are not in tolerance. The remedy is the same. Return the power supply.

3.3.3 Transmitter Card

NOTE

Replacements for some integrated circuits on the transmitter card are only available from Scientific-Atlanta. They are all in the Parts List, Chapter 4, but for your convenience, they're listed here also.

Reference Designator	Scientific-Atlanta Part Number
U1	304112
U4	327878
U5	327877
U6	327876
U7	174506
U8	252731
U12	327878
U13	327877
U14	327876
U18	457040
U19	Refer to Scientific-Atlanta for current number
U25	309149
U27	458355
Z1	0327940
Z2	0327942
Z3	0327944

Several voltage and oscilloscope readings you'll be making will vary, depending on the data pattern you have selected. Which data pattern you choose isn't critical; however, to keep your readings consistent, once you choose a pattern, don't change it.

NOTE

For this procedure, we are checking the DS1 circuit of a transmitter card in slot 4.

3.3.3.1 No DS1 Signal Out

Disconnect all rear-panel cables from the transmitter card to be checked and put the card on the Scientific-Atlanta card extender. Have the transmitter card schematic handy (Chapter 5) and refer to Figure 3.12 to locate card components.

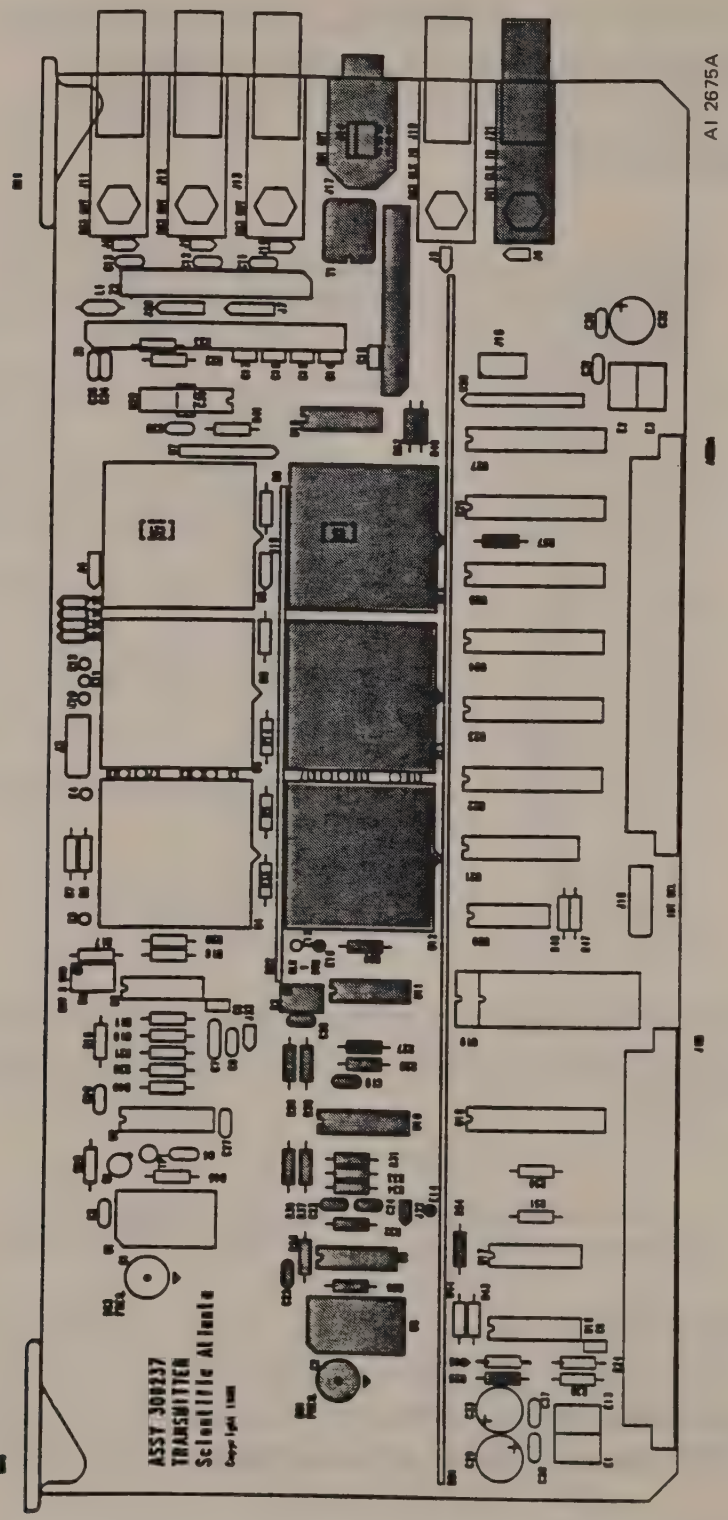

Figure 3.12. Transmitter Card DS1 Components

Step One: Clock Oscillator U8.

1. Use oscilloscope to check for a +5 volts clock pulse at 6.176 MHz crystal oscillator U8, pins 4 and 8. (Square pad is pin 1, number pins counterclockwise, looking from front of the card.)

   Clock pulse is correct. Oscillator is OK but something else is wrong. Check U14, **Step Two.**

   Clock pulse is not there. Check oscillator input pin 14 for +5 volts dc. If you have +5 volts in and nothing out, replace oscillator U8.

2. Check output of replacement U8 for clock pulse.

   Clock pulse is correct. Check transmitter card output for a DS1 bipolar signal that meets template specifications, see Figure 3.13.

   Transmitter output meets specifications. The oscillator was the problem. Remove card extender, reconnect rear-panel cables, plug transmitter card back into analyzer and replace analyzer top. Turn on the analyzer and repeat procedures in Section 3.2 that apply to that card.

   Transmitter output does not meet specifications. You have more than oscillator problems. Go to **Step Two.**

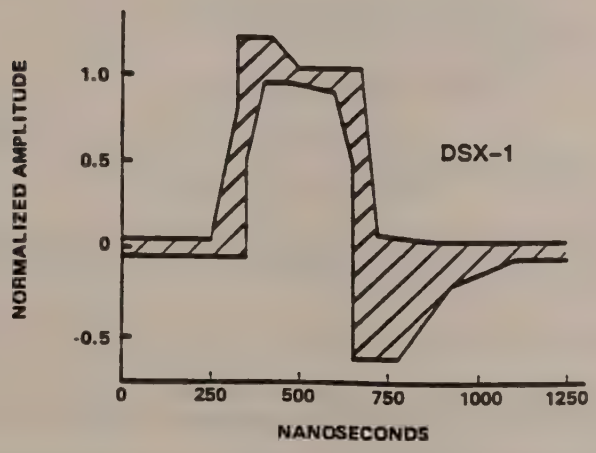

Figure 3.13. DSX DS1 Bipolar Signal - Isolated Pulse Template

Step Two: U14.

1. Check input of U14, pin 28 for 1.544 MHz clock pulse.

   Correct clock pulse at pin 28 of U14. All components from the output of oscillator U8 to pin 28 of U14 are good but the transmitter card output is still bad. Check amplifier Z3, **Step Three.**

   No clock pulse at pin 28 of U14. Check for clock pulse at pin 6 of U11.

      Clock pulse is at pin 6 of U11, but not at pin 28 of U14. Check for short or open circuit between pins 28 of U14 and pin 6 of U11.

      No clock pulse at pin 6 of U11. Check for clock pulse at pin 6 of U10.

         Clock pulse at pin 6 of U10. With your oscilloscope measuring the clock pulse at pin 6 of U11, adjust R3 for a clock pulse with a 50/50 duty cycle, see Figure 3.12.

            1.544 MHz clock pulse at pin 6 of U11. Reconnect cables and check transmitter card output, see Figure 3.13. If output signal fits within specified template, reassemble analyzer and repeat procedures in Section 3.2 that apply to this card.

            No clock pulse at pin 6 of U11. Replace U11, then check output of transmitter card, see Figure 3.13.

               Transmitter card output correct. Reassemble analyzer and repeat procedures in Section 3.2 that apply to this card.

               Transmitter card output not correct. Check input of pin 28 of U14.

                  U14 input correct. Check U14, U13 and U12, see **Step Four.**

                  U14 input still not correct.

2. Let's review. Oscillator U8 is good, U11 is good. But your transmitter output is not right, and your input to U14 is not right, and you have no output at pin 6 of U10.

3. Check output from U10, pin 6.

   No output from U10. Check the three selector lines at the input of U10, pins 9, 10 and 11. Voltage at all three pins must be at logic zero (< +0.4 volts) for U10 to produce an output.

   Logic high (> +0.4 volts) at pins 9, 10 or 11 of U10. Check DS1 BERTS XMTR SETUP to make sure INTERNAL CLOCK is selected. Here's how you do that.

   Type **ECHO<CR> DCL<CR> ADDR 4-TX2<CR>.** Then check setup parameters by typing **SETUP<CR>.** What you want to see is Figure 3.14, with the CLOCK entry INTERNAL.

```
REMOTE>addr 4-TX2

REMOTE (4-TX2)>setup

                Channel    :  DS1 4-TX2
             Tx Output     :  ON
                  Code     :  AMI
                 Frame     :  SF
               Pattern     :  PRBS-20

          Loopback (esf)   :   OFF
          Loopcode (esf)   :   CSU-LINE
          Loopback (sf)    :   OFF
          Loopcode (sf)    :   CSU-LINE

                Yellow     :  OFF
                 Clock     :  INTERNAL
              Tx-Busy      :  OFF

                Errors     :  Pattern: BIT     Frame: FBIT     Coding: BPV
```

02858

Figure 3.14. DS1 Transmitter Setup Screen

To change the CLOCK setting, if it needs changing, type **CLOCK INTERNAL<CR>**. The screen won't change, but to check the new setting, type **SETUP<CR>**.

INTERNAL CLOCK is selected and there is still voltage at either pin 9, 10 or 11 of U10. Check U14, U13 and U12, see **Step Four.**

INTERNAL CLOCK is selected and there is no voltage at pins 9, 10 and 11. Check pin 4 of U10.

No clock pulse at input pin 4 of U10. Check input of U9, pin 1. Input signal at pin 1 of U9 and no input at U10 means U9 is bad. Replace and remeasure.

Correct input to U10. Check input of U14 at pin 28 for clock pulse.

Correct input to U14. Proceed with check of U14, U13 and U12, **Step Four.**

No input to U14. Replace U10. Verify output of transmitter card and compare to template.

Now, you have checked the transmitter card circuit up to the input of U14 and everything is in order. However, the output of the transmitter card still does not meet template specifications. The next step is to check output amplifier Z3.

Step Three: Amplifier Z3.

1. Check input of amplifier Z3; both pins 5 and 13 should have a +5 volts data pulse, 324 nanoseconds wide.

   No data pulses at either pin 5 or 13. At U14, check input pin 28 for +5 volts clock pulse at 1.544 MHz.

   No input pulse to U14. Check U14, U13 and U12, see **Step Four.**

   Correct input to U14. At U14, check output pin 54 for 1.544 MHz clock pulse. Check input pin 51 for same clock pulse, and input pin 50 for the selected data pattern.

   No pulse at U14, pins 54, 51 or 50. Replace U14. Check input to Z3, pins 5 and 13.

   Correct input at both pins 5 and 13. Check output of transmitter card against template, see Figure 3.13. If output meets template specifications, reassemble analyzer and repeat procedures in Section 3.2 that apply to this card.

   Output does not meet template specifications. Check output of Z3, pins 8 and 10 for data pulses. Should be the same as signal at pin 50 of U14, selected data pattern.

   Z3 output not correct. Replace Z3.

   Z3 output correct. Replace transformer T1.

2. Check output of transmitter card output for bipolar signal, see Figure 3.13. If it meets specifications, reassemble analyzer and repeat procedures in Section 3.2 that apply to this card.

You have eliminated all the major components of the transmitter card as sources of trouble except the three chips, U14, U13 and U12. They are interconnected and must be tested together, see **Step Four.**

Step Four: U14, U13 and U12.

You have checked everything from the input of oscillator U8 to the input pin 28 of U14, and everything from the output amplifier Z3 to the output. Now, the output of the transmitter card is not correct; still, the input to pin 28 of U14 is correct.

Input signal to U14 at pin 28 is correct. Check U14 for a clock pulse at input pin 51 and a selected data pattern at input pin 50.

No clock pulse at pin 51. Replace U13 and check for clock pulse at pin 51. If pulse is good, check output of transmitter card. If output signal meets specifications, U13 was your problem. Reassemble analyzer and repeat procedures in Section 3.2 that apply to this card.

Clock pulse at input pin 51 but no data pattern at input pin 50. Check U13 output; pin 54 should have clock pulse, pin 55 should have selected data pattern.

No clock pulse at pin 54. Replace U13.

No data pattern at pin 55. Replace U12.

Recheck U14 for a clock pulse at input pin 51 and a selected data pattern at input pin 50.

Correct pulse at pin 51 and data pattern at pin 50. Check transmitter output. If output signal meets specifications, reassemble analyzer and repeat procedures in Section 3.2 that apply to this card.

At this stage, you have checked all the components of the DS1 section of the transmitter card.

Here's the procedure for the DS3 circuit.

3.3.3.2 No DS3 Signal Out

Have the transmitter card schematic handy (Chapter 5) and refer to Figure 3.15 to locate card components. We're assuming a transmitter card is in slot 4.

Disconnect rear-panel cables. Put the transmitter card on the Scientific-Atlanta card extender.

Step One: Clock Oscillator U1.

1. Use oscilloscope to check for a +5 volts clock pulse at 44.736 MHz at crystal oscillator U1, pins 4 and 8. (Square pin is pin 1, number pins counterclockwise.)

   Output signal is correct. Oscillator is OK but something else is wrong. See **Step Two.**

   Output signal is not there. Check input pin 14 for +5 volts dc. If you have +5 volts in, and nothing out, replace oscillator U1.

2. Check output of replacement U1 for clock pulse.

   Output signal is correct. Reconnect rear-panel cables and check transmitter card output at DS3-TX1 for bipolar signal that meets template specifications, see Figure 3.16.

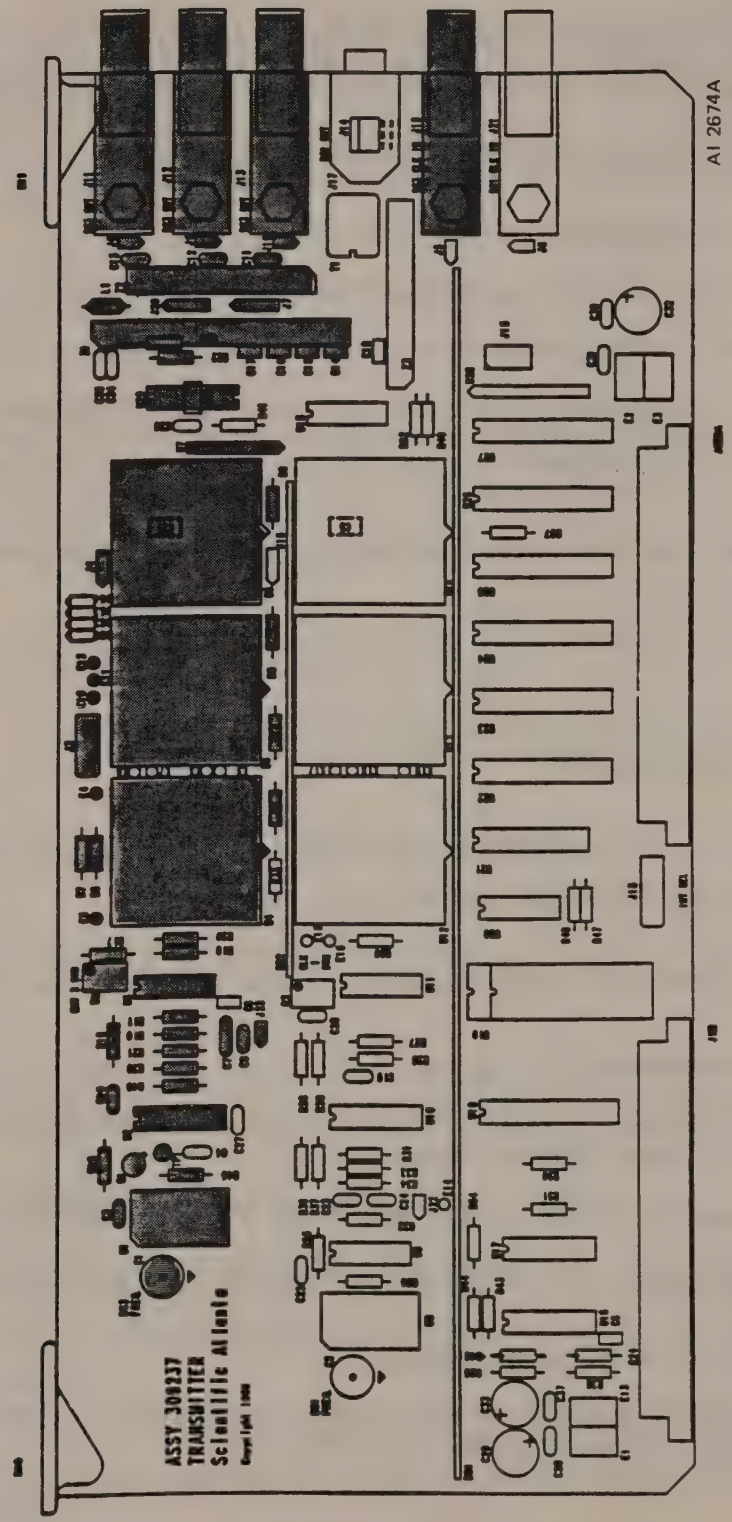

Figure 3.15. Transmitter Card DS3 Components

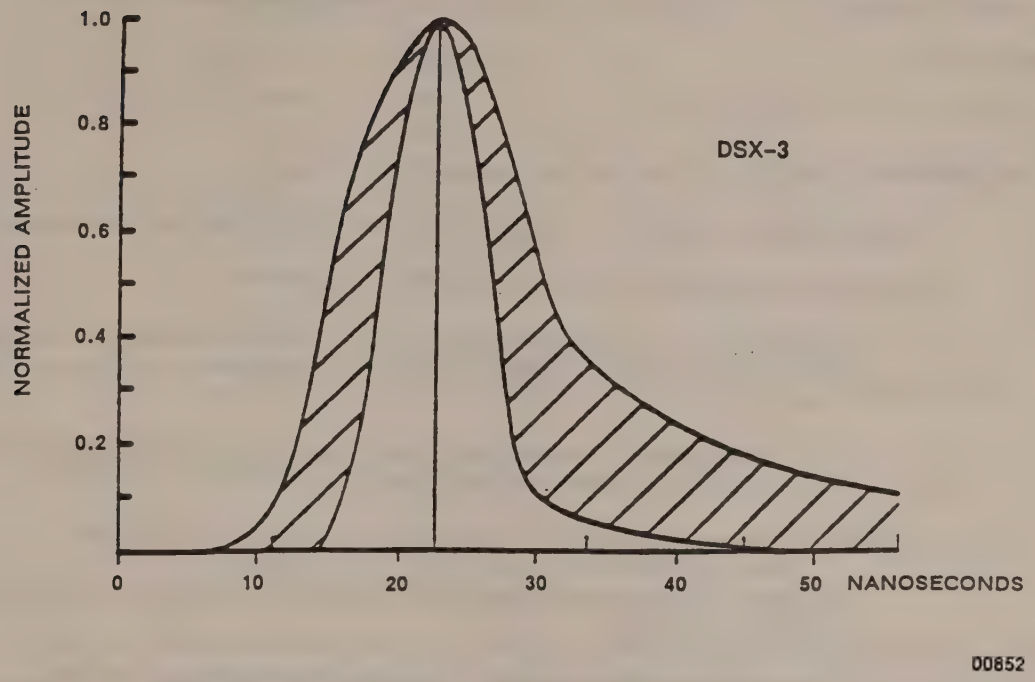

Figure 3.16. DSX DS3 Transmitter Output Signal

Transmitter output meets specifications. The oscillator was the problem. Remove card extender; reconnect rear-panel cables. Plug transmitter card back into analyzer, replace card retainers and replace analyzer top. Turn on the analyzer and repeat procedures in Section 3.2 that apply to this card.

Transmitter output does not meet specifications. You have problems other than your oscillator. Go to **Step Two.**

3. Check input of oscillator U1, pin 14. Should be +5 volts dc.

   No input voltage to U1. Check pin 29 of U6 for a logic zero (< +0.4 volts).

   Pin 29 of U6 is logic zero. Replace transistor Q1.

   Pin 29 of U6 is logic one (> +0.4 volts). Check U6 in **Step Four.**

4. Let's review where we are. Input transistor Q1 is good and crystal oscillator U1 is good. Now check U2 and U3.

5. Check input of U6, pin 28 for +5 volts clock pulse.

   Correct clock pulse at pin 28 of U6. All components from the output of oscillator U1 to pin 28 of U6 are good, but the transmitter card output is still bad. Check amplifier Z1, **Step Three.**

Step Two: U3.

1. Check for clock pulse at pin 28 of U6.

   No clock pulse at pin 28 of U6. Check for clock pulse at pin 8 of U3.

   Clock pulse at pin 8 of U3. Check for short or open circuit between pin 28 of U6 and pin 8 of U3.

   No clock pulse at pin 8 of U3. Check for clock pulse at pin 3 of U2.

   Clock pulse at pin 3 of U2, but not at pin 8 of U3. With your oscilloscope measuring the clock pulse at pin 8 of U3, adjust R2 for a clock pulse with a 50/50 duty cycle, see Figure 3.15.

   Cannot tune R2 and get clock pulse at pin 8 of U3. Replace U3, then check output of transmitter card, see Figure 3.16.

   +5 volts clock pulse at pin 8 of U3. Check transmitter card output, see Figure 3.16.

   Transmitter card output correct. Reassemble analyzer and repeat procedures in Section 3.2 that apply to this card.

   Transmitter card output not correct. Once again, check input of pin 28 of U6.

   U6 input correct. Check U6, U5 and U4, see **Step Four.**

   U6 input still not correct.

2. Let's review. Oscillator U1 is good, U3 is good. But your transmitter output is not right, and your input to U6 is not right.

3. Check input of U2, pin 16.

   No input to U2. Check the two selector lines at the input of U2, pins 1 and 2. Logic levels at both pins must be zero for U2 to produce a clock pulse.

   Logic ones at U2, pins 1 and 2. Check DS3 setup to see that the clock is internal. Here's how you do that.

   You should already be at the transmitter in slot 4. Check status by typing **SETUP<CR>**. What you want to see is Figure 3.17, with the CLOCK entry INTERNAL.

   To change the CLOCK setting, if you need to, type **CLOCK INTERNAL<CR>**. The screen won't change until you type **SETUP<CR>.**

   INTERNAL CLOCK is selected and there are still logic ones at pins 1 or 2. Check U6, U5 and U4, **Step Four.**

```
REMOTE>addr 4-TX1

REMOTE (4-TX1)>setup

          Channel   :  DS3 4-TX1
       Tx Output    :  ON
            Level   :  DSX
            Frame   :  M13
          Pattern   :  PRBS-15
            Clock   :  INTERNAL
         Tx-Busy    :  OFF
             Xbit   :  1

           Errors   :  Pattern: BIT     Frame: FBIT     Coding: BPV

REMOTE (4-TX1)>                                                  02859
```

Figure 3.17. DS3 Transmitter Setup Screen

Now, you have checked the transmitter card circuit up to the input of U6 and everything is in order. However, the output of the transmitter card still does not meet template specifications. The next step is to check output amplifiers Z1 and Z2.

Step Three: Amplifiers Z1 and Z2.

1. Type **SETUP<CR>**. You'll see a status sheet similar to Figure 3.17. Type **LEVEL DSX<CR>**. This puts a logic one at input pin 10 of output amplifier Z1.

2. Check Z1 input pins 10, 22, 21 and 19 at amplifier Z1. Pin 10 should have a positive voltage, pins 22, 21 and 19 should have a zero voltage.

   Input voltages at pins 10, 22, 21 and 19 are not correct. Replace U6.

3. Check Z1 input at pins 5 and 4. Should look like Figure 3.18.

   Input to amplifier Z1 at pins 10, 22, 21, 19, 5 and 4 are correct. Check output at pin 16 for a +1 volt peak bipolar signal that matches template shown in Figure 3.16.

   Output of Z1 at pin 16 is correct. Check output of transmitter card for bipolar signal within template, Figure 3.16. If output meets specifications, reassemble analyzer and repeat procedures in Section 3.2.

   Output of Z1 at pin 16 is not correct. Replace Z1.

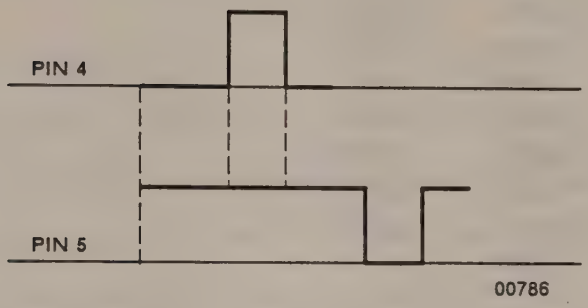

Figure 3.18. Amplifier Z1 Input

4. Check output of buffer Z2 pins 5, 9 and 14 for signal same as Z1 output at pin 16, but inverted. Should also match transmitter card output template.

   Output of Z1 is correct, output of Z2 is not correct. Replace Z2.

Now you have checked the transmitter card circuit up to the input of U6 and everything is in order. However, U6 is interconnected with U5 and U4, and the next step is to check the three chips together.

Step Four: U6, U5 and U4.

You have checked everything from the input of oscillator U1 to the input pin 28 of U6, and everything from the output amplifier Z1 to the transmitter output. Now, the output of the transmitter card is not correct, and the input to pin 28 of U6 is correct.

Input signal to U6 at pin 28 is correct. Check U6 for a clock pulse at input pin 51 and a selected data pattern at input pin 50.

No clock pulse at pin 51. Replace U5 and check for clock pulse at pin 51. If pulse is good, check output of transmitter card. If output signal meets specifications, U5 was your problem. Reassemble analyzer and repeat procedures in Section 3.2 that apply to this card.

Clock pulse at input pin 51 but no data pattern at input pin 50. Check U5 output; pin 54 should have clock pulse, pin 55 should have selected data pattern.

No clock pulse at pin 55. Replace U5.

No data pattern at pin 55. Replace U4.

Recheck U6 for a clock pulse at input pin 51 and a selected data pattern at input pin 50.

Correct pulse at pin 51 and data pattern at pin 50. Check transmitter output. If output signal meets specifications, reassemble analyzer and repeat procedures in Section 3.2 that apply to this card.

3.3.3.3 No DS1 or DS3 Signal Out

When your External Troubleshooting procedures show no output from either DS1 or DS3 channels, the problem may be in the bus interface. Have the bus interface schematic handy (Chapter 5) and refer to Figure 3.19 to find card components.

NOTE

For this procedure, we are checking a transmitter card in slot 4.

1. Turn off analyzer power.
2. Connect oscilloscope to input of U21, pins 1 and 11.
3. Turn on analyzer power. On your oscilloscope, you should see pulses for a few seconds.

Pulses are there; error message is still on screen. Replace U21. If there is no change, replace U19.

Pulses are there, error message is gone, and you can change the 'screen' readings, but there is still zero output for DS1 and DS3.

Check output of U17 for positive voltage at all output lines. If output is continuously low (< +0.4 volts) replace U17. If changing U17 doesn't solve the problem, replace 27.

No pulses at inputs of U21, pins 1 and 11. Remove and replace in this order U22, U23, U24, U26, U25 and U27.

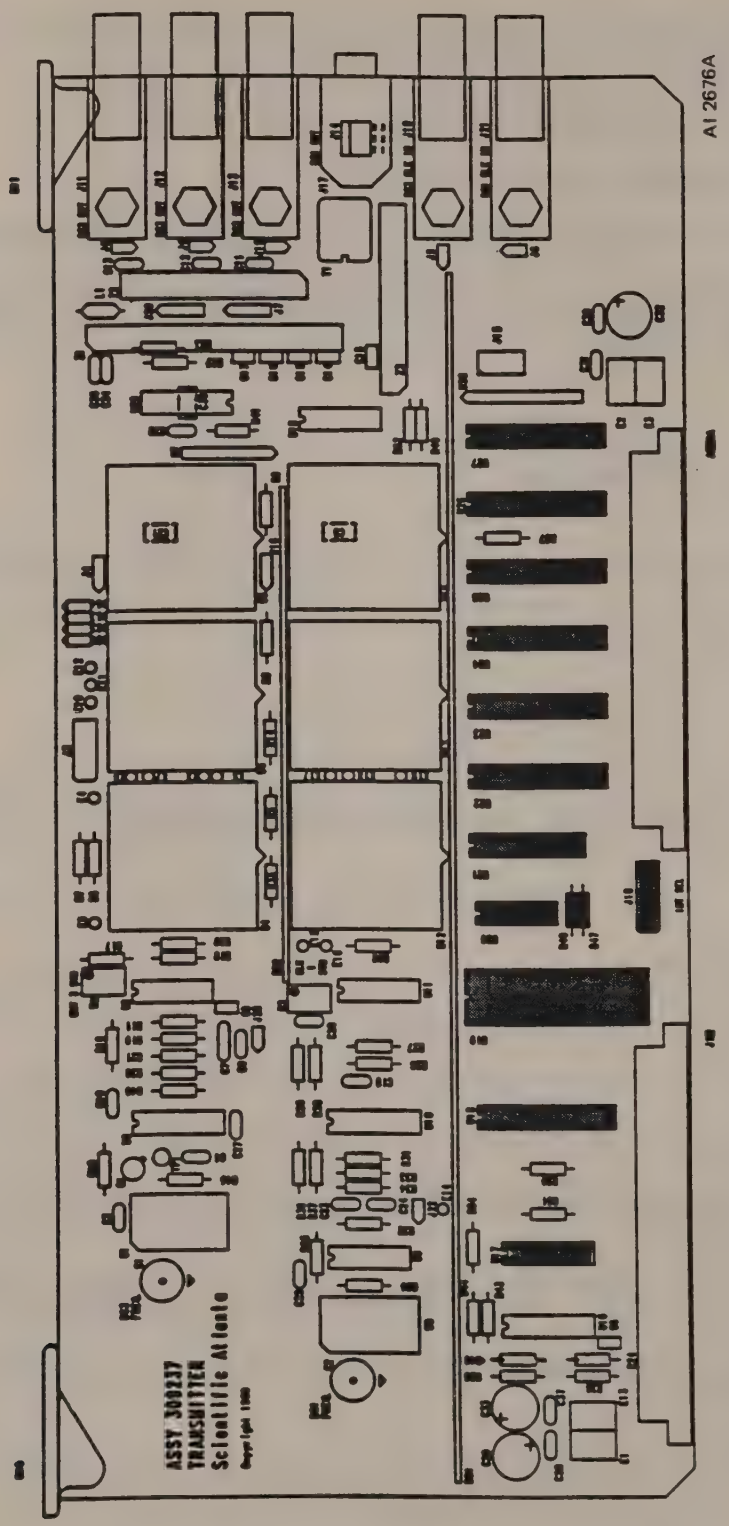

Figure 3.19. Transmitter Bus Interface Components

4. Remove card extender, reconnect rear-panel cables, plug transmitter card back into analyzer, replace card retainers and replace analyzer top. Turn on the analyzer and repeat procedures in Section 3.2 that apply to this card.

At this stage, you have done all you can do with the transmitter card.

3.3.4 Demux Card

NOTE

Make sure you have a good transmitter to check the demux card. See Section 3.3.3.

The demux card has five diagnostic LEDs on the top edge. Here's what these LEDs indicate:

Definition		Abbreviation	Reference Designator	STATUS Screen ALARMS Entry
DS1	Frame Loss	1FL	DS5	OOF
DS1	Pattern Loss	1PL	DS2	LOP
DS2	Frame Loss	2FL	DS1	OOF
DS3	Frame Loss	3FL	DS4	OOF
DS3	Pattern Loss	3PL	DS3	LOP

The LEDs give *hardware* status. The CRT screen gives hardware status as seen by the software. Occasionally, it is convenient to compare readings to help isolate problems.

NOTE

Replacements for some circuits on the demux card can only come from Scientific-Atlanta. These circuits are in the Parts List, Chapter 4, but for your convenience, they're listed here too.

Reference Designator	Scientific-Atlanta Part Number
U1	307959
U2	327877 or 457040
U3	327878
U4	327877 or 457040
U5	327876
U9	327875
U10	458325
U17	327878
U18	327877 or 457040
U19	327876
U24	327875
U28	307951
U29	461091
U36	457001
U38	3079577
U40	307963
Y1	318996
Z1	327940
Z2	327944
U31, U32	Refer to Scientific-Atlanta for current number

3.3.4.1 DS1 Circuit

1. Put the demux card on the Scientific-Atlanta card extender.

2. Disconnect rear-panel cables.

3. Check for supply voltages of +5 volts dc at connector J1, row C, pin 2, see Figure 3.20.

   +5 volts not at pin 2 of J1C. Go to Section 3. Check power supply.

   +5 volts is at pin 2 of J1C. Go to next step.

In this procedure you will be asked to check for data pattern A. Figure 3.21 shows Data Pattern A, 1010 with no framing.

NOTE

This procedure is for a demux card in slot 9 with a good DS1 transmitter in slot 4.

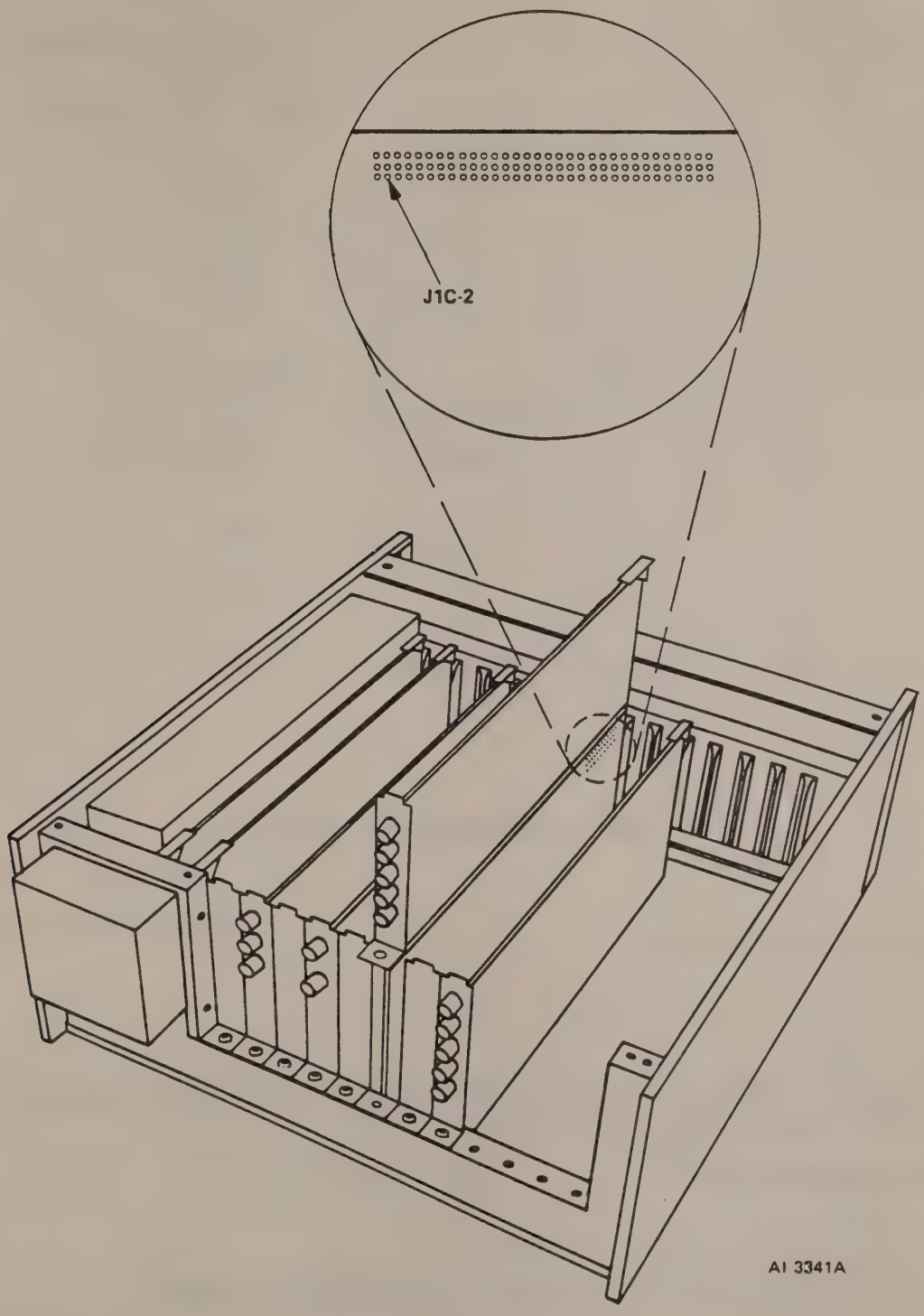

Figure 3.20. Voltage Checkpoints

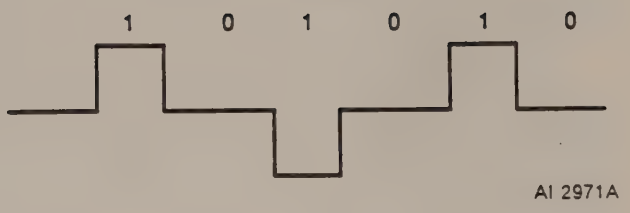

Figure 3.21. Data Pattern A, 1010

Here's how you get data pattern A.

1. Connect DS1-TX2 in slot 4 to DS1-RX2 in slot 9.

2. Type **ADDR 4-TX2<CR>**. Then type **SETUP<CR>**. What you want to see is Figure 3.22 with the CLOCK entry INTERNAL. Change CLOCK entry, if you need to, by typing **CLOCK INTERNAL<CR>**. Screen won't change until you type **SETUP<CR>**.

3. Type **PATTERN 1010<CR>**. These entries will produce data pattern A.

4. Put the demux card on the Scientific-Atlanta card extender.

5. Have the demux card schematic handy and refer to Figure 3.23 to locate components.

```
REMOTE>addr 4-TX2

REMOTE (4-TX2)>setup

                Channel   :  DS1 4-TX2
             Tx Output    :  ON
                  Code    :  AMI
                 Frame    :  SF
               Pattern    :  PRBS-20

        Loopback (esf)    :   OFF
        Loopcode (esf)    :   CSU-LINE
        Loopback (sf)     :   OFF
        Loopcode (sf)     :   CSU-LINE

                Yellow    :  OFF
                 Clock    :  INTERNAL
              Tx-Busy     :  OFF

                Errors    :  Pattern: BIT    Frame: FBIT    Coding: BPV
```

02858

Figure 3.22. DS1 Transmitter Setup Screen

Step One: Type **STATUS<CR>**.

NOTE

We presume you have a bad card that has been isolated by the procedures in Section 3.2. Consequently, the ALARMS entry on the STATUS screen will show LOS (Loss Of Signal), LOP (Loss Of Pattern), OOF (Out Of Frame) or AIS (All 1s Signal).

The STATUS screen shows a hierarchy of failures; LOS, OOF then LOP, e.g., Loss Of Signal, Out Of Frame and then Loss Of Pattern. Or, to put it another way, you can't solve an LOP problem until you have framing, and you can't solve a framing problem until you have a signal.

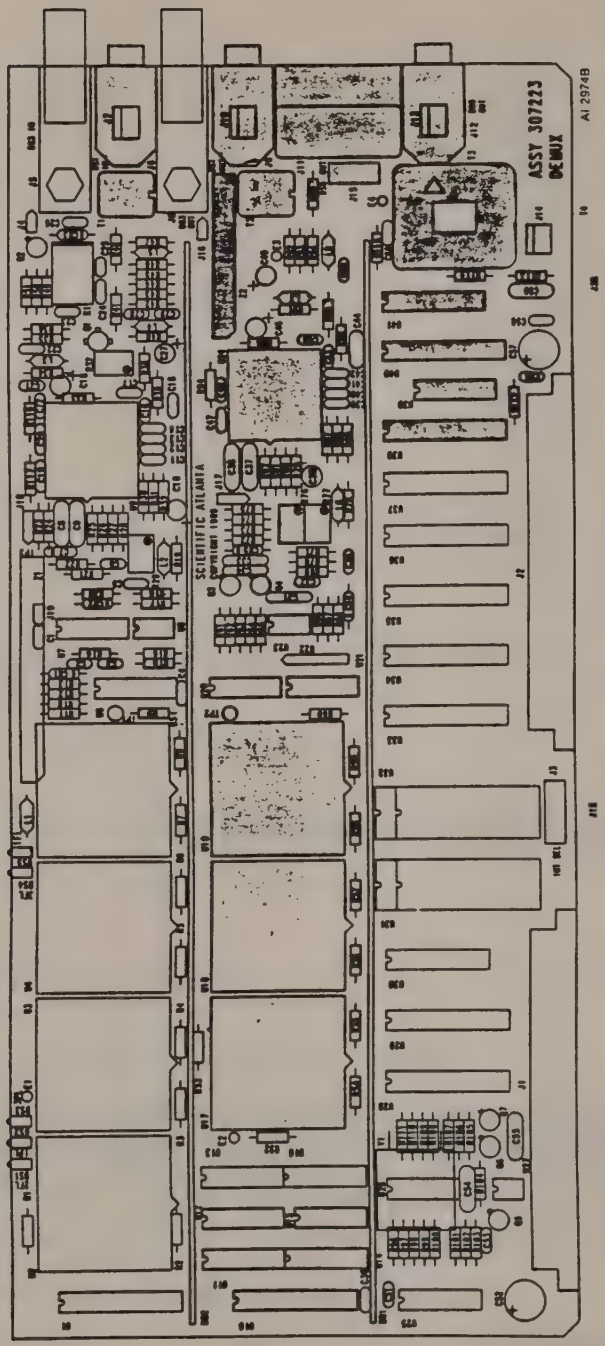

Figure 3.23. DS1 Components of Demux Card

STATUS screen ALARMS entry shows LOS. LOS indicates potential trouble in two places. Either the clock recovery signal is not phase-locked with the input signal, or there is no input signal at all.

Use oscilloscope to check for data pattern A at pin 11 of U24.

No data pattern A at output pin 11 of U24. Check input pin 23 of U24 for data pattern A.

Data pattern A at input pin 23 of U24. Replace U24.

Still no data pattern A at pin 23 of U24. Check cable at connection J7 and input. Check input to transformer T1, pin 3, for data pattern A.

Data pattern A is at pin 3 of transformer T1. Replace T1.

NOTE

A standard TTL clock pulse is logic zero between 0 and +0.8 volts. It is logic one between +2.4 and 5.2 volts.

Data pattern A is at output pin 11 of U24. With oscilloscope check for TTL clock pulse, 1.544 MHz, at U24, pin 30.

There are three possibilities; the TTL clock pulse is not there, the TTL clock pulse is there at 1.544 MHz, or the TTL clock pulse is there but not at 1.544 MHz.

No TTL clock pulse at pin 30 of U24. Replace U24. Recheck for TTL clock pulse at pin 30 of U24.

No TTL clock pulse at pin 30 of U24. Check pin 5 of U24 for +5 volts ± 5%.

No voltage at pin 5 of U24. Check R78 and L6 for short or open circuits.

TTL clock pulse at 1.544 MHz is at pin 30 of U24. Check pin 28 of U24 for +5 volts dc.

-5 volts dc at pin 28 of U24. Replace U24.

+5 volts dc at pin 28 of U24. Check U19, pin 20 for a logic one (> +2.4 volts).

Pin 20 of U19 has logic one. Verify phase lock by checking U19, pin 12 for TTL low (< +0.8 volts).

U19, pin 12 has TTL low. Replace U19.

TTL clock pulse at pin 30 of U24 but not at 1.544 MHz. At pin 12 of U19, check for TTL low.

Pin 12 of U19 is low. Replace U19.

(1) With no signal applied, jumper pins 1 and 2 of J17.

(2) Set R76 approximately in the middle of its range.

(3) Connect frequency counter to TP2.

(4) Adjust R77 until frequency counter shows 1.60 to 1.61 MHz.

(5) Short pin 6 of U24 to -5 volts dc and adjust R76 for a frequency of 1.49 to 1.50 MHz.

(6) Jumper pins 2 and 3 of J17, disconnect the short at pin 6 of U24, and adjust R77 for a frequency of 1.590 to 1.595 MHz.

(7) Repeat steps (1) through (6) until frequency range is 1.50 to 1.59 MHz.

Step Two: Type **STATUS<CR>**.

STATUS screen ALARMS entry shows CLEAR. Go to **Step Five:** Check Frequency.

STATUS screen ALARMS entry shows OOF. Check to see if framing is on. Here's how you do that.

1. Type **FRAME CPAR<CR> STATUS<CR>**.

   ALARMS entry still shows OOF. Check that U19 is decoding properly. Type **PATTERN 1111<CR> STATUS<CR>.**

   ALARMS entry still shows OOF. With oscilloscope, check pin 55 of U19 for an all 1s pulse with an occasional (zero) framing bit. It looks like Figure 3.24.

   Data pulse with framing bit at pin 55 of U19. Replace U4.

   No data pulse at pin 55 of U19. Replace U19.

2. Type **STATUS<CR>**.

   ALARMS entry shows CLEAR. Go to **Step Five:** Check Frequency.

   ALARMS entry shows OOF. Check phase lock. Here's how you do that.

   Check pin 30 of U24 for TTL clock pulse at 1.544 MHz.

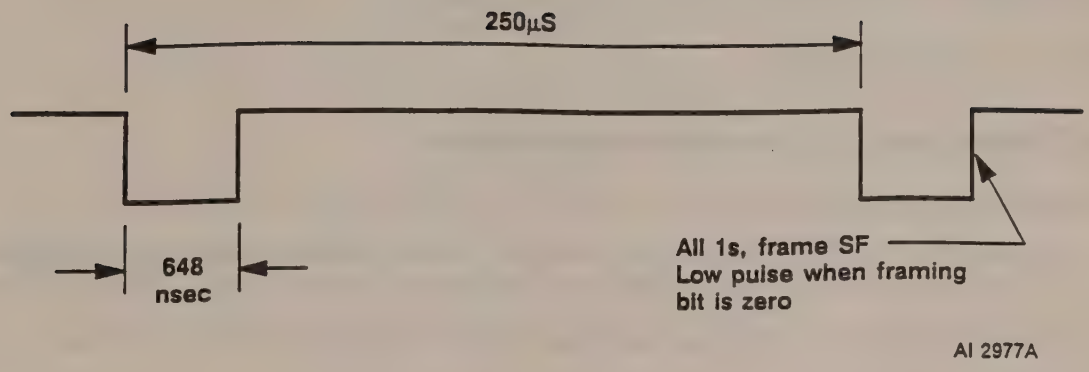

Figure 3.24. All Ones Data with Framing Bits

TTL clock pulse at pin 30 of U24 but not at 1.544 MHz. Adjust phase lock.

(1) With no signal applied, jumper pins 1 and 2 of J17.

(2) Set R78 approximately in the middle of its range.

(3) Connect frequency counter to TP2.

(4) Adjust R77 until frequency counter shows 1.60 to 1.61 MHz.

(5) Short pin 6 of U24 to -5 volts dc and adjust R76 for a frequency of 1.49 to 1.50 MHz.

(6) Jumper pins 2 and 3 of J17, disconnect the short at pin 6 of U24, and adjust R77 for a frequency of 1.590 to 1.595 MHz.

(7) Repeat steps (1) through (6) until frequency is between 1.50 and 1.59 MHz.

Step Three: Type **STATUS<CR>.**

STATUS screen ALARMS entry shows CLEAR. Go to **Step Five:** Check Frequency.

STATUS screen ALARMS entry shows LOP. Replace U17 and type **STATUS<CR>.**

ALARMS entry shows CLEAR. Go to **Step Five:** Check Frequency.

ALARMS entry shows LOP. Replace U18.

Step Four: Type **STATUS<CR>.**

ALARMS entry shows CLEAR. Go to **Step Five:** Check Frequency.

ALARMS entry shows AIS. Make sure you are using the internal clock. Here's how you do that.

1. Type **ADDR 4-TX2<CR>.** Then type **SETUP<CR>.** What you want to see is Figure 3.22 with the CLOCK entry INTERNAL. Change CLOCK entry, if you need to, by typing **CLOCK INTERNAL<CR>.**
2. Type **PATTERN 1111<CR>.** Screen shows Figure 3.24.
3. Type **SETUP<CR>.**

ALARMS entry shows CLEAR. Put demux card back in analyzer, reassemble analyzer, and repeat Section 3.2, making sure to check all transmitters against all receivers.

ALARMS entry shows AIS. Replace U18.

Step Five: Check Frequency.

Type **STATUS<CR>.** The STATUS screen should show, for example, "Freq.(1.544002) +1ppm", which means the DS1 input frequency is 1.544002 MHz.

DS1 input signal frequency is 1.544 MHz. Remove card extender, plug demux card back into mothercard, and reassemble analyzer. Turn on the analyzer and repeat procedures in Section 3.2 making sure you check all transmitters against all receivers.

No DS1 frequency measurement (screen shows "Freq.(n/a)"). With oscilloscope check pin 11 of U12 for a TTL square wave at a frequency of 6.17600 MHz.

No TTL pulse at pin 11 of U12. Check pin 7 of connector J2B for TTL pulse.

TTL pulse is at pin 7 of J2B. Replace U10.

TTL pulse is not at pin 7 of J2B. Proceed to Section 3.3.19, Mothercard.

TTL pulse is at pin 11 of U12. Check pin 13 of U12 for CMOS clock pulse, 2.6 microseconds wide, 50 milliseconds apart.

TTL clock pulse is at pin 13 of U12. Replace U12, and if necessary, U11.

No pulse at pin 13 of U12. Replace U10 and then if necessary U19.

Still no pulse at pin 13 of U12. Check for 50-millisecond latch signal at pin 58 of U19.

No latch signal at pin 58 of U19. Check J2B pin 27 for 50-millisecond latch signal.

Latch signal at J2B pin 27. Replace buffer U21.

No latch signal at J2B pin 27. Rerun Diagnostic Test, Section 3.3.18.

Step Six: Check DS1 to DS0 Demultiplexing.

1. Type **FRAME SF<CR> PATTERN PRBS 20.**
2. Connect headphones to VF OUT connector on rear panel of demux card and check for noise similar to AM static.

Static in headphones. DS1 to DS0 demultiplexer is good. Proceed to Section 3.3.18, Diagnostic Test.

No static in headphones. Type **STATUS<CR>.**

ALARMS entry shows OOF. Go to **Step Two** for the Out-Of-Frame procedure.

ALARMS entry shows CLEAR. Check for AM static at VF OUT connector.

No static in headphones. Go to **Step Seven:** Check DS0 Audio Output.

Step Seven: Check DS0 Audio Output.

Check U41 pin 11 for a 1.544 MHz ungapped clock pulse.

Ungapped clock pulse not at pin 11 of U41. Replace U18.

Ungapped clock pulse is at pin 11 of U41. Check pin 9 of U41 for an 8 kHz strobe.

8 kHz strobe not at pin 9 of U41. Replace U18 and recheck pin 9 of U41 for an 8 kHz strobe. If that doesn't help, check pin 9 of U40 for 8 kHz strobe.

8 kHz is present at pin 9 of U41. Check pin 8 of U41 for a changing data pattern.

Changing data pattern at pin 8 of U41. Replace U41.

No changing data pattern at pin 8 of U41. Replace U18.

Step Eight: Check Digital Output.

The digital output of the demux card is checked on connector J11 on the rear panel of the demux card and is labeled DS0 OUT. With your oscilloscope, check pin 8 of the DS0 OUT connector for a TTL clock pulse with pulses 647 nanoseconds wide and 125 microseconds apart. This is the octet end marker, see Figure 3.25.

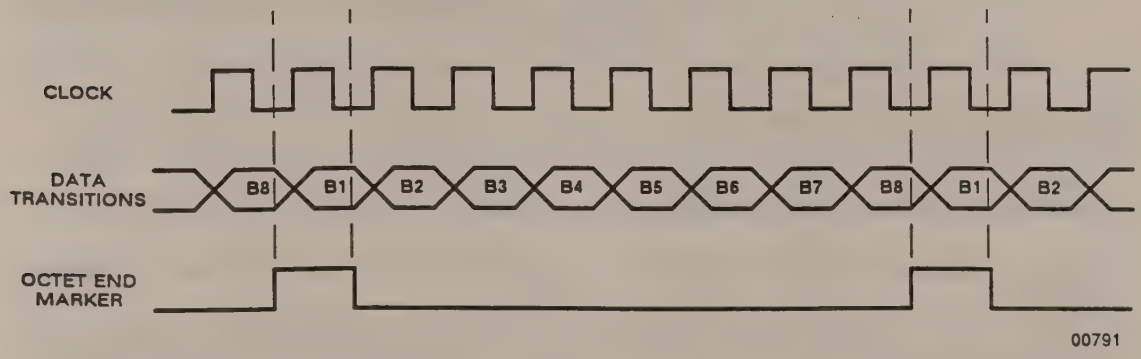

Figure 3.25. Timing Diagram

Octet end marker is at pin 8 of J11. Check J11, pin 7 for a 64 kHz clock pulse (TTL level) and check J11 pin 6 for data transitions (TTL level), see Figure 3.25.

Octet end marker is not at pin 8 of J11, or 64 kHz clock pulse is not at pin 7, or data transitions are not at pin 6. Check pin 10 of U40 for data, pin 7 of U40 for a clock pulse and pin 11 of U40 for octet end marker.

Any of the signals at pin 10, 7 or 11 of U40. Replace U40 and recheck pins at DS0 OUTPUT.

Signal missing at either pin 10, 7 or 11 of U40. Check U39, pin 9 for a high TTL level (> +2.4 volts).

Signal at pin 9 of U39 is high. Check U39, pin 4 for data transitions and U39, pin 3 for clock pulse.

No data transitions at pin 4 of U39. Replace U18.

No clock pulse at pin 3 of U39. Check pin 1 of U38 for clock pulse.

No clock pulse at pin 1 of U38. Replace U18 and check pin 3 of U38 for logic zero.

No logic zero at pin 3 of U38. Replace U40.

Logic zero at pin 3 of U38. Replace U38.

Step Nine: Check DS1 THRU Output.

Type **FRAME SF<CR> PATTERN 1111<CR>.**

ALARM entry shows CLEAR. Apply 100-ohm differential load to the DS1 THRU connector. Connect oscilloscope across the load and check for a 6 volt peak-to-peak output.

No output voltage across DS1 THRU load. Check U19, pins 37 and 38 for random data pulses.

Random data pulses are present at U19, pins 37 and 38, Replace Z2. If replacing Z2 doesn't help, replace T2.

No pulses at U19, pins 37 and 38. Replace U19.

Step Ten: How To Calibrate DS1 Channel

1. Set R76 to approximately the middle of its range and connect a frequency counter to TP2.

CAUTION

Skipping step (2) may damage the card.

2. With no signal coming in, take the jumper off J17 and jumper J20.
3. Adjust R77 for a frequency of 1.54x MHz.
4. Move the jumper from J20 to J21.
5. Adjust R76 for a frequency of 1.44x MHz.

Frequency is no 1.44x MHz. Repeat steps (2) through (5) until you get the correct frequencies.

Frequency is 1.44x MHz Go to step (6) of this procedure.

CAUTION

Skipping step (6) may damage the card.

6. Remove jumpers from J20 or J21 and jump pins 2 and 3 of J17.

7. Spray Freeze-mist on U24 (frequency may drift). Warm U24 to 40° C. You should not lose signal or have any errors.

8. Set the DS1 transmitter to b8zs and prbs-23. Connect DS1 transmitter to DS1 receiver and run a one-minute test and verify no errors.

9. Replace cable with 27 dB cable. Run a one-minute test and verify no errors.

Step Eleven: Check signaling bits.

NOTE

Should any of the signaling bit patterns not show up on the screen, replace U18.

1. Type **FRAME 4-TX1 SF<CR> CODE B8ZS<CR> PATTERN PRBS-20.**

2. Type **SIGNALING 9-RX1.** Figure 3.26 shows PRBS signaling bit data.

```
                              DS1 Error Rate Test                ALARMS CLEAR
-------------------------------------------------------------------------------
01:01:05  01/01   SA AT 9000 ATLANTA GA     Slot 2 RX2 DS1        Mode:  SF B8ZS
END OF TEST RESULTS                         Timer: 00:00:03       Pattern:PRBS20
-------------------------------------------------------------------------------
                              DS1 Signaling Status
          1-6                  7-12                 13-18                19-24
        ------               ------               ------               ------
A   ? ? ? ? ? ?    ? ? ? ? ? ?    ? ? ? ? ? ?    ? ? ? ? ? ?
B   ? ? ? ? ? ?    ? ? ? ? ? ?    ? ? ? ? ? ?    ? ? ? ? ? ?
C   x x x x x x    x x x x x x    x x x x x x    x x x x x x
D   x x x x x x    x x x x x x    x x x x x x    x x x x x x
```

00853

Figure 3.26. PRBS Signaling Bit Pattern

3. Type **PATTERN FIXED 1 1 1 1**

4. Type **SIGNALING 9-RX1.** Figure 3.27 shows all ones signaling bit pattern.

```
                                DS1 Error Rate Test                    ALARMS CLEAR
-------------------------------------------------------------------------------------
01:01:05  01/01   SA AT 9000 ATLANTA GA      Slot 2 RX2 DS1          Mode:  SF B8ZS
END OF TEST RESULTS                          Timer: 00:00:03         Pattern:ALL 1S
-------------------------------------------------------------------------------------
                                DS0 Signaling Status
          1-6                  7-12                 13-18                 19-24
        ------               ------               ------               ------
A   1  1  1  1  1  1     1  1  1  1  1  1     1  1  1  1  1  1     1  1  1  1  1  1
B   1  1  1  1  1  1     1  1  1  1  1  1     1  1  1  1  1  1     1  1  1  1  1  1
C   x  x  x  x  x  x     x  x  x  x  x  x     x  x  x  x  x  x     x  x  x  x  x  x
D   x  x  x  x  x  x     x  x  x  x  x  x     x  x  x  x  x  x     x  x  x  x  x  x
```

00854

Figure 3.27. All 1s Signaling Bit Pattern

5. Type **PATTERN FIXED 0 0 0 0.**

6. Type **SIGNALING 9-RX1.** Figure 3.28 shows all zeros signaling bit pattern.

```
                                DS1 Error Rate Test                    ALARMS CLEAR
-------------------------------------------------------------------------------------
01:01:05  01/01   SA AT 9000 ATLANTA GA      Slot 2 RX2 DS1          Mode:  SF B8ZS
END OF TEST RESULTS                          Timer: 00:00:03         Pattern:ALL 0S
-------------------------------------------------------------------------------------
                                DS0 Signaling Status
          1-6                  7-12                 13-18                 19-24
        ------               ------               ------               ------
A   0  0  0  0  0  0     0  0  0  0  0  0     0  0  0  0  0  0     0  0  0  0  0  0
B   0  0  0  0  0  0     0  0  0  0  0  0     0  0  0  0  0  0     0  0  0  0  0  0
C   x  x  x  x  x  x     x  x  x  x  x  x     x  x  x  x  x  x     x  x  x  x  x  x
D   x  x  x  x  x  x     x  x  x  x  x  x     x  x  x  x  x  x     x  x  x  x  x  x
```

00855

Figure 3.28. All 0s Signaling Bit Pattern

This is all you can do for the DS1 section of the demux card.

3.3.4.2 DS3 Circuit

Here's the procedure for troubleshooting the demux DS3 circuit.

IMPORTANT NOTE

WHEN YOU MUST REPLACE U9... There are four instances in this procedure when you may need to replace U9. Should this happen, before you take the next step, calibrate the DS3 circuit. Use the procedures in **Step Eight** only. And **ONLY WHEN YOU MUST REPLACE U9.**

NOTE

This procedure is for a demux card in slot 9 with a good DS3 transmitter card in slot 4.

Have the demux card schematic handy and refer to Figure 3.29 to locate components.

1. Put the demux card on the Scientific-Atlanta card extender.
2. Disconnect rear-panel cables.
3. Check for supply voltages of +5 volts dc at connector J1, row C, pin 2, see Figure 3.30.

   +5 volts not at pin 2 of J1C. Go to Section 3. Check power supply.

   +5 volts is at pin 2 of J1C. Go to next step.
4. Connect DS3-TX1 in slot 4 to DS3-RX1 in slot 9.
5. Type **ADDR 4-TX1<CR> SETUP<CR>**. What you want to see is Figure 3.31 with the CLOCK entry INTERNAL. Change CLOCK entry, if you need to, by typing **CLOCK INTERNAL<CR>**. Screen won't change until you type **SETUP<CR>**.
6. Type **PATTERN 1010<CR>**. These entries will produce data pattern A, Figure 3.32.
7. Type **ADDR 9-RX1<CR>**.

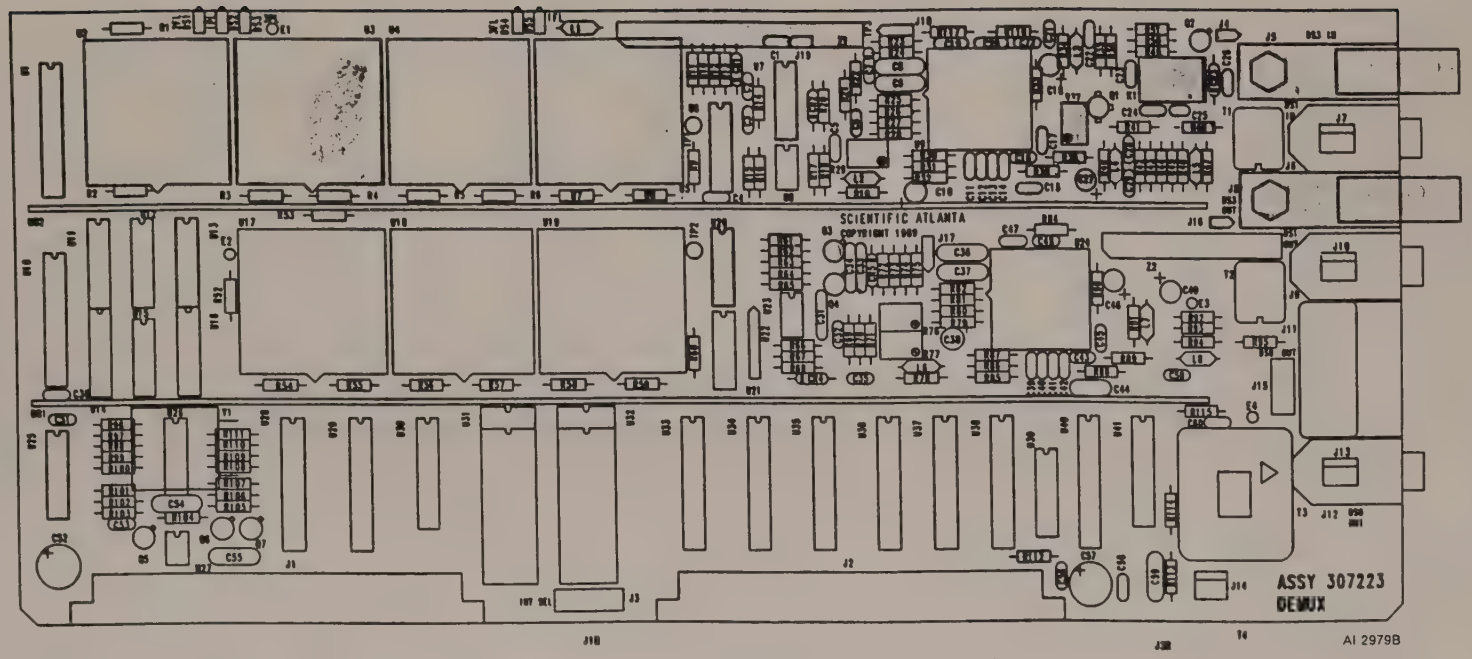

Figure 3.29. DS3 Components of Demux Card

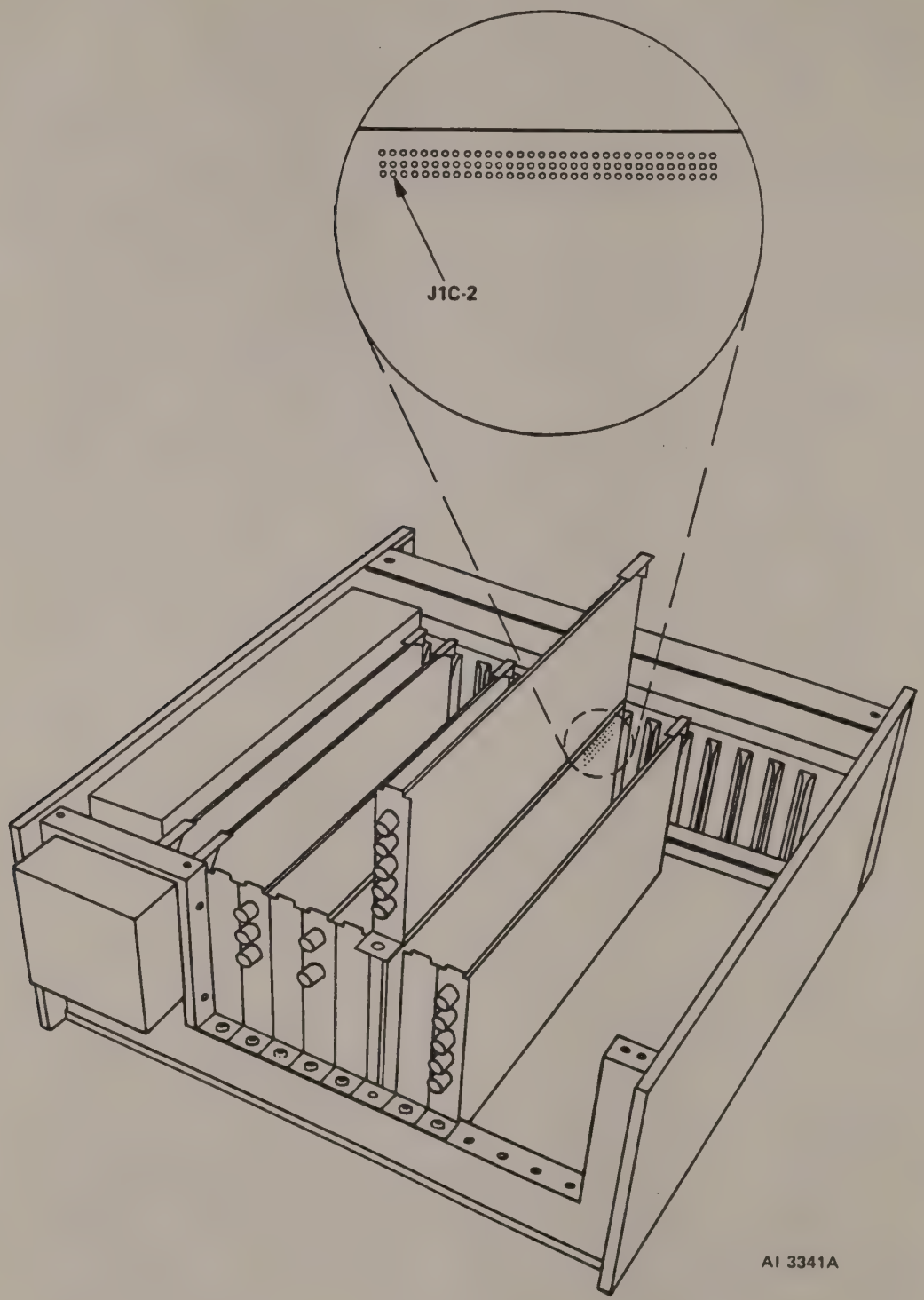

Figure 3.30. Voltage Checkpoints

```
REMOTE>addr 4-TX1

REMOTE (4-TX1)>setup

          Channel   :  DS3 4-TX1
       Tx Output    :  ON
            Level   :  DSX
            Frame   :  M13
          Pattern   :  PRBS-15
            Clock   :  INTERNAL
          Tx-Busy   :  OFF
             Xbit   :  1

           Errors   :  Pattern: BIT     Frame: FBIT     Coding: BPV

REMOTE (4-TX1)>
```

02859

Figure 3.31. DS3 Transmitter Setup Screen

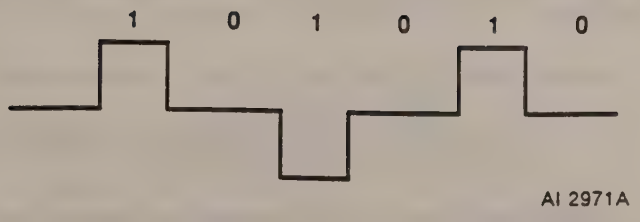

Figure 3.32. Data Pattern A, 1010

Step One: Type **STATUS<CR>**.

NOTE

The STATUS screen shows a hierarchy of failures; LOS, OOF then LOP, e.g., Loss Of Signal, Out Of Frame and then Loss Of Pattern. Or, to put it a different way, you can't solve an LOP problem until you have framing, and you can't solve a framing problem until you have a signal. First, consider the case where you have LOS.

STATUS screen ALARMS entry shows LOS. Use oscilloscope to check output pin 11 of U9 for data pattern A.

No data pattern A at output pin 11 of U9. Check input pin 23 of U9 for data pattern A.

IMPORTANT NOTE

WHEN YOU MUST REPLACE U9... There are four instances in this procedure when you may need to replace U9. Should this happen, before you take the next step, calibrate the DS3 circuit. Use the procedures in **Step Eight** only. And **ONLY WHEN YOU MUST REPLACE U9.**

Data pattern A at input pin 23 of U9. Replace U9.

Data pattern A not at input pin 23 of U9. Check input to relay K1, pin 10 for data pattern A.

Data pattern A not at pin 10 of relay K1. Type **ADDR 4-TX1<CR> LEVEL DSX-LOW**. This puts data pattern A at pin 10 of relay K1. Check pin 3 of relay K1 for signal.

No signal at pin 3. Check base of buffer Q1 for data pattern A.

No data pattern A at base of buffer Q1. Replace Q1. Type **LEVEL HIGH**. Check pin 3 of relay K1 for signal.

No signal at pin 3 and DS3 RCVR level is set on "high." Replace K1.

Data pattern A at output pin 11 of U9. With oscilloscope, check output of U9 at pin 30 for TTL clock pulse at 44.736 MHz.

There are three possibilities; the TTL clock pulse is not at pin 11 of U9, or it is there at 44.736 MHz, or it is there but at the wrong frequency.

IMPORTANT NOTE

WHEN YOU MUST REPLACE U9... There are four instances in this procedure when you may need to replace U9. Should this happen, before you take the next step, calibrate the DS3 circuit. Use the procedures in **Step Eight** only. And **ONLY WHEN YOU MUST REPLACE U9.**

No TTL clock pulse at pin 30 of U9. Replace U9.

TTL clock pulse at 44.736 MHz is at pin 30 of U9. Check for +5 volts dc at pin 28 of U9.

-5 volts at pin 28 of U9. Replace U9.

+5 volts dc at pin 28 of U9. Check U5 pin 12 for a logic zero (< +0.4 volts).

Pin 12 of U5 has voltage. Replace U8. Check input of U5 at pin 58 for a 50-millisecond square pulse.

Square pulse at pin 58 of U5. Replace U5.

No square pulse at pin 58 of U5. Check input of buffer U21, pin 9.

Square pulse at pin 9 of U21. Replace U21.

No square pulse at pin 9 of U21. Run Diagnostic Test, Section 3.3.18.

TTL clock pulse is at pin 30 of U9 but not at 44.736 MHz. Set up DS3 Clock Recovery. Here's how you do that.

1. Connect frequency counter to TP1. Jumper pins 1 and 2 of J18 and adjust R29 for a frequency of 45.x MHz.
2. Short pins 6 and 8 together and check frequency.

Frequency is less than 38 MHz. Go to next step in this procedure.

IMPORTANT NOTE

WHEN YOU MUST REPLACE U9... There are four instances in this procedure when you may need to replace U9. Should this happen, before you take the next step, calibrate the DS3 circuit. Use the procedures in **Step Eight** only. And **ONLY WHEN YOU MUST REPLACE U9.**

Frequency is more than 38 MHz. Replace U9.

3. Remove short from between pins 6 and 8 and adjust R29 for a frequency of 47 MHz.

4. Jumper pins 2 and 3 of J18. Apply all 1s signal to a DS3 input and check counter for a reading of 44.736 MHz.

   Frequency is 44.736 MHz. Adjust R29 for a voltage at pin 3 of U9 to 0 volts ± 0.25 volts. Spray U9 with Freeze-mist (this may cause frequency to drift from 44.736 MHz). Apply heat until U9 is 40° C. Front panel DS3 LOS led stays out.

   Frequency is not 44.736 (clock does not lock to 44.736 MHz). Check U5, pin 12, for a logic high.

   Pin 12 of U19 is not at a logic high. Check U8, pin 7, for +5 volts.

   U8 pin 7 is not +5 volts. Check U8, pin 5 to be more negative than U8, pin 6.

   Pin 5 of U8 is more negative than pin 6 of U8. Replace U9.

   Pin 12 of U19 is at a logic high. Set oscilloscope on 1-volt scale, and check signal at pin 6 of U9 for a triangular pulse going above and below zero.

   Triangular pulse at pin 6 of U9. Replace U9.

   No triangular pulse at pin 6 of U9. Check U23, pin 7 for triangular pulse.

   No triangular pulse at pin 7 of U23. Check U20, pin 11 for 100-millisecond square pulse.

5. Let's review. Analog Clock Recovery Card U9 is good, and so are the components associated with it. This should take care of the LOS problem.

Step Two: Type **ADDR 9-RX1<CR> STATUS<CR>.**

ALARMS entry shows OOF. First, make sure the framing is on. Here's how you do that.

1. Type **ADDR 4-TX1<CR> FRAME CPAR<CR>.**

2. Type **ADDR 9-RX1<CR> STATUS<CR>.**

   ALARMS entry still shows OOF. Check that U5 is decoding correctly.

   Type **ADDR 4-TX1<CR> PATTERN 1111<CR>.**

   Type **ADDR 9-RX1<CR> STATUS<CR>.**

   ALARMS entry shows OOF. With oscilloscope, check pin 55 of U5 for an all 1s pulse with an occasional (zero) framing bit. The pulse looks like Figure 3.33.

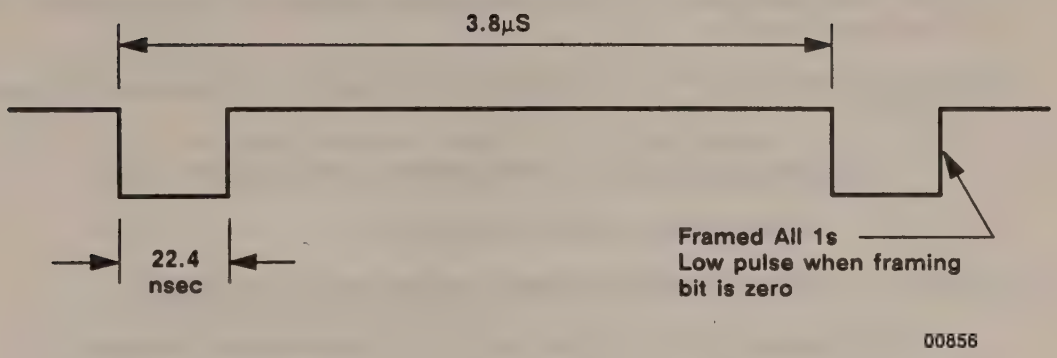

Figure 3.33. All Ones Data with Framing Bits

Data pulse with framing bits at pin 55 of U5. Replace U4. Type **STATUS<CR>**.

ALARMS entry shows CLEAR. Go to **Step Four:** Check Frequency.

No data pulse with framing bits at pin 55 of U5. Replace U5. Type **STATUS<CR>**.

ALARMS entry shows LOP. Replace U3. Type **STATUS<CR>**.

ALARMS entry shows CLEAR. Go to **Step Four:** Check frequency.

ALARMS entry still shows LOP. Replace U4.

Step Three: Type **ADDR 4-TX1<CR> PATTERN BLUE<CR> ADDR 9-RX1<CR> STATUS<CR>**.

ALARMS entry shows CLEAR. Go to **Step Four:** Check Frequency.

ALARMS entry shows BLUE. Take demux card off card extender, plug into mothercard, reassemble analyzer and repeat procedures of Section 3.2, making sure you check all transmitters with all receivers.

Step Four: Check Frequency.

1. Type **STATUS<CR>**. Frequency entry shows, for example, "Freq.(44.73642) +9ppm", which means the DS3 frequency is 44.73642 MHz, which is 9 parts per million high.

   Screen shows "Freq.(44.73642)...". DS3 output frequency is good. Remove card extender, plug demux card back into mothercard, replace card retainers and replace analyzer top. Turn on analyzer and repeat front-panel test, Section 3.2.

   Screen shows "Freq (n/a)". With oscilloscope check signal at pin 11 of U13 for a square TTL square wave at 6.176 MHz.

   No TTL pulse at pin 11 of U13. Check pin 7 of connector J2B for TTL pulse.

   TTL pulse at pin 7 of J2B. Replace U10.

   TTL pulse not at pin 7 of J2B. Check Mothercard, Section 3.3.19.

   TTL pulse at pin 11 of U13. Check pin 13 of U13 for 50-millisecond latch signal.

   Latch signal at pin 13 of U13. Replace U13. If still no frequency, check 50-millisecond latch signal from real-time clock card with Diagnostic Test, Section 3.3.18.

   No latch signal at pin 13 of U13. Replace U10 and then, if necessary, U5.

Step Five: Check DS3 to DS0 Demultiplexing.

NOTE

Analyzer does not provide a DS3 signal for this test. Input external DS3 either on rear panel of the demux card in slot 9, or at the card input.

1. Make sure the DS1 receiver is set for a demuxed input. Type **STATUS<CR> DMUX 9-RX1 22<CR>**.

2. Connect external demuxed DS3 signal and type **STATUS<CR>**.

   Screen ALARMS entry shows CLEAR. Go to **Step Six.**

   Screen ALARMS entry shows OOF. Check DS2 framing. Here's how you do that. First, check LEDs. On the top edge of the demux card are five LEDs. Check the DS2 frame loss LED; it is labeled 2FL.

   LED 2FL is off. DS2 frame is good.

   LED 2FL is on. DS2 has not framed. Replace U2 and type **STATUS<CR>**.

ALARMS entry shows LOS. DS2 has framed, but DS1 has not. With frequency counter, check for 1.544 MHz ± 50 Hz signal at U19, pin 25.

No signal at U19, pin 25. Check output of U26, pin 8 for TTL level 1.544 MHz signal.

CAUTION

Be careful moving the crystal Y1. It's in a precarious position and is easily damaged.

No signal at U26, pin 8. Replace and recheck for signal, in this order; U26, transistors Q5, Q6 and Q7, and finally crystal Y1.

No signal at U26, pin 8. Replace U10. Check U25, pin 14 for 193 kHz signal.

No signal at U25, pin 14. Check for 1.544 MHz signal at U2, pin 30.

No signal at U2, pin 30. Replace U2.

Signal at U2, pin 30. Replace U10.

Off-frequency signal at U19, pin 25 (not 1.544 MHz ± 50 Hz). Replace U25. With oscilloscope, check for data at U19, pin 24.

No data or gaps in data at U19, pin 24. Check for data at U2, pin 29.

No signal at U2, pin 29. Replace U2.

Signal at U2, pin 29. Replace U1, then recheck and replace U14 if necessary.

3. Let's review. DS1 smoother is OK, DS3 and DS2 framing is OK but there is no demuxing DS1 to DS0 from DS3.

   Check for 1.544 MHz ± 50 Hz signal at U19, pin 54 and data at U19, pin 55. Signal should be identical to signal at U19, pin 25 and data should be identical to data at U19, pin 24.

   Both signals, pins 25 and 24 of U19, are present.

NOTE

If the DS1 channel worked in the EXTERNAL mode, it should work from here on.

No signals at U19, pins 54 and 55. Replace U19.

DS1 framing OK but no DS0 audio. Check, in succession, for signals at pins 8, 9 and 11 of U41.

At pin 8, you should see data transitions.

At pin 9, you should see an 8 kHz octet strobe.

At pin 11, you see a 1.544 MHz signal.

No signal at any three of these pins. Replace U18. Recheck for audio signal.

All signals there; replace U41. Recheck for audio signal.

Step Six: Check Digital Output.

The digital output of the demux card is checked on connector J11, which is labeled DS0 OUT on the rear panel of the demux card. With your oscilloscope, check pin 8 of the DS0 OUT connector for a TTL clock pulse with pulses 647 nanoseconds wide and 125 microseconds apart. This is the octet end marker, see Figure 3.34.

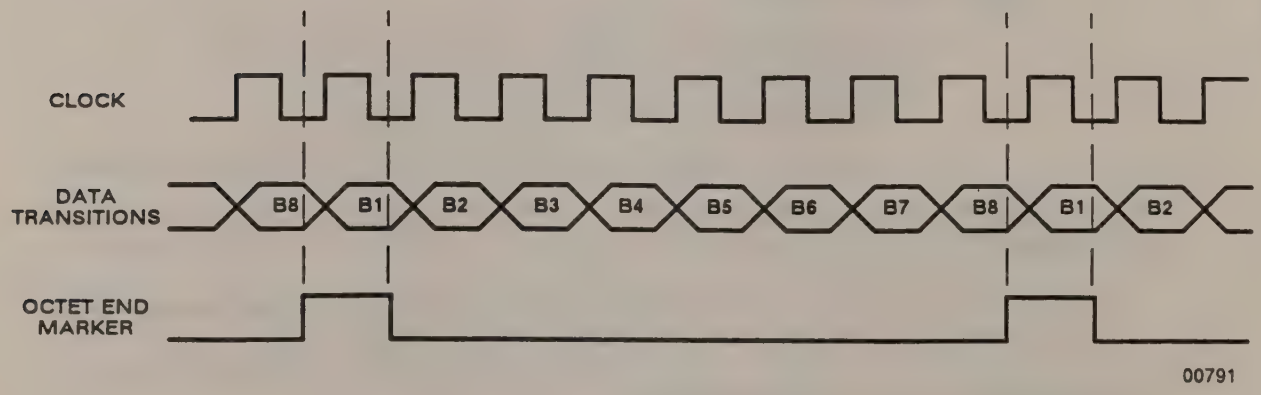

Figure 3.34. Timing Diagram

Octet end marker is at pin 8 of J11. Check J11, pin 7 for a 64 kHz clock pulse (TTL level) and check J11, pin 6 for data transitions (TTL level). The three signals--clock, data and octet end marker--are shown in the correct juxtaposition, see Figure 3.34.

Octet end marker is not at pin 8 of J11, or 64 kHz clock pulse is not at pin 7, or data transitions are not at pin 6. Check pin 10 of U40 for data, pin 7 of U40 for a clock pulse and pin 11 of U40 for octet end marker.

Any of the signals are at pins 10, 7 or 11 of U40. Replace U40 and recheck DS0 OUTPUT.

Signal missing at either pin 10, 7, or 11 of U40. Check U39, pin 9 for a high TTL level.

Signal at pin 9 of U39 is not high. Type **STATUS<CR>**.

ALARMS entry shows CLEAR. Replace U40.

Signal at pin 9 of U39 is high. Check U39, pin 4 for data transitions and U39, pin 3 for clock pulse.

No data transitions at pin 4 of U39. Replace U18.

No clock pulse at pin 3 of U39. Check pin 1 of U38 for clock pulse.

No clock pulse at pin 1 of U38. Replace U18 and check pin 3 of U38 for logic zero.

No logic zero at pin 3 of U38. Replace U40.

Logic zero at pin 3 of U38. Replace 38.

Step Seven: Check DS3 THRU Output.

1. Type **ADDR 4-TX1<CR> FRAME M13<CR>PATTERN PRBS15<CR>**.
2. Connect a 73-ohm single-ended load to the DS3-THRU on slot 9. Connect oscilloscope across the load, and check for a 0.7 to 1.2 volt peak-to-peak output signal.

No output across load. Check U5, pin 37 and 38 for pulses.

No pulses at pins 37 or 38. Replace Z1.

Remove card extender, reconnect rear-panel cables, plug transmitter card back into analyzer, replace card retainers, and replace analyzer top. Turn on the analyzer and repeat procedures in Section 3.2 that apply to this card.

Step Eight: How To Calibrate the DS3 Circuit

1. Connect frequency counter to TP1 and jumper pins 1 and 2 of J18. Adjust R29 for a frequency of 45.x MHz.

2. Short pin 6 of U9 to -5.2 volts (pin 8); frequency 38 MHz.

   Frequency is greater than 38 MHz. Replace U9 and repeat test.

   Frequency is 38 MHz or less. Go to step 3 in this procedure.

3. Jumper pins 2 and 3 of J18. Adjust R29 for a frequency of 47 MHz.

4. Connect external DS3 signal to DS3-RX connector. Frequency is 44.736 MHz (signals are phase locked).

5. Adjust R29 for a voltage at pin 3 of U9 of 0 ± 0.25 volts.

6. Spray U9 with Freeze-mist (frequency may drift from 44.736 MHz) then heat U9 to 40° C. Verify there are no errors.

7. Choose XMTR, then ___DS3 BERTS, m13 framing, hi level and any PRBS. Connect the full length of DTA/DAS long test cable (Scientific-Atlanta part number 306159) from DS3 TX1 to DS3 RX.

8. On front of analyzer, choose RCVR, then ___ DS3 BERTS and on the Level: line, choose ___dsx/low.

9. Type **FRAME 4-TX2 M13<CR> LEVEL HIGH<CR> PATTERN PRBS-20.** Connect transmitter to receiver with the full length of the long test cable (Scientific-Atlanta Part Number 306159). Type **LEVEL 9-RX2 DSX-LOW.**

10. Connect digital voltmeter to the junction of R24, C7 and ground. Remove jumper on J18 and adjust R37 for a voltage between 100 and 105 millivolts.

11. Jumper pins 1 and 2 on J18. Frequency is 44.736 MHz and voltage is less than -225 millivolts.

12. Replace long cable with a short one. Type **LEVEL 4-TX2 LOW.** Frequency stays at 44.736 and voltage stays below -225 millivolts.

13. Type **PATTERN BLUE.** Frequency stays at 44.736 and voltage stays below -225 millivolts.

    Voltage is above -225 millivolts. Adjust R37 until voltage is between -225 millivolts and -255 millivolts.

14. Remove jumper from J18. Voltage is more than +50 millivolts.

    Voltage is between +30 millivolts and +50 millivolts. Adjust R37 until voltage is more than +50 millivolts.

15. Jumper pins 1 and 2 on J18. Voltage is less than -225 millivolts.

16. Remove R21 and connect the test circuit to the ASIC like this:

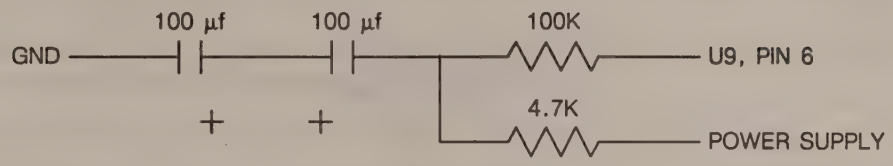

Make sure the lead from pin 6 of U9 to the resistors is less than 6 inches.

17. Type **REP 9-RX2 REM REF 00:00:01 RUN <CR>.** Connect 10 volts DC power supply to the test circuit and set to zero volts. Also, use REMOTE-DEU command to set terminal type.

NOTE

In the next two steps, using the DS3 MEASUREMENTS screen, watch **BOTH** error seconds and total bit errors. When the error rate is high, error seconds may change but total bit errors may not.

When you can't get a zero error rate at a positive voltage (step 18), adjust the voltage to the smallest negative voltage that just begins to produce errors.

When you can't get a zero error rate at a negative voltage (step 19), adjust the voltage to the smallest positive voltage that just begins to produce errors.

18. Adjust voltage toward +10 volts until you just lose your signal (you show an LOS) then adjust voltage toward zero until LOS just goes away and no errors are made. Write down this voltage, including its sign. **You'll need it later. This is V1.**

19. Set test voltage back to zero, then adjust it toward -10 volts until you just get LOS, then adjust voltage toward zero until LOS barely goes away and no errors are made. Write down this voltage, including its sign. **This is V2.**

20. Calculate V3 = V1 + V2.

    V3 is between +0.5 volts and -0.5 volts. Calibration is correct. Go to step 21.

    V3 is more than +0.5 or less than -0.5 volts. Go to step 17. in this procedure.

21. Choose offset correction resistor from Resistor Table that corresponds to the value of V3 calculated in step 17. Connect it between -5.2 volts (U9, pin 8 and U9, pin 6).

RESISTOR TABLE
(R in Kilohms, V3 in volts)

	V3			V3			V3	
R	max	min	R	max	min	R	max	min
2210	0.58	0.50	487	2.16	2.11	226	4.65	4.54
1500	0.77	0.58	475	2.22	2.16	221	4.77	4.65
1240	0.86	0.77	464	2.30	2.22	215	4.77	4.77
1180	0.91	0.86	442	2.41	2.30	205	5.14	4.96
1100	0.99	0.91	422	2.53	2.41	200	5.25	5.14
1000	1.07	0.99	402	2.62	2.53	196	5.43	5.25
953	1.12	1.07	392	2.68	2.62	187	5.64	5.43
909	1.17	1.12	383	2.78	2.68	182	5.78	5.64
866	1.23	1.17	365	2.92	2.78	178	6.00	5.78
825	1.29	1.23	348	3.06	2.92	169	6.29	6.00
787	1.35	1.29	332	3.21	3.06	162	6.59	6.29
750	1.42	1.35	316	3.37	3.21	154	6.84	6.59
715	1.49	1.42	301	3.50	3.37	150	7.00	6.84
681	1.56	1.49	294	3.58	3.50	147	7.25	7.00
649	1.64	1.56	287	3.71	3.58	140	7.62	7.25
619	1.72	1.64	274	3.89	3.71	133	8.00	7.62
590	1.81	1.72	261	4.03	3.89	127	8.39	8.00
562	1.87	1.81	255	4.13	4.03	121	8.82	8.39
549	1.92	1.87	249	4.23	4.13	115	9.12	8.82
536	1.99	1.92	243	4.33	4.23	113	9.33	9.12
511	2.06	1.99	237	4.44	4.33	110	9.68	9.33
499	2.11	2.06	232	4.54	4.44	105	10.15	9.68

22. Repeat steps 18, 19, and 20.

V3 is between -0.5 volts and +0.5 volts. Install correction resistor as R21 and go to step 23.

V3 is less than -0.5 volts or more than +0.5 volts. Take the correction resistor off and repeat procedure, starting with step 18.

23. Type **FRAME 4-TX2 OFF<CR> LEVEL HIGH<CR>PATTERN 1111**. Connect DS3 TX1 to Channel 2 of your oscilloscope. Connect DS3 TX2 to DS3 RX. Set scope to DC Coupled, 5 nanoseconds per division, and trigger on Channel 2.

24. Using the FET probe on Channel 1 of the scope, look at the NRAIL signal on pin 15 of U5. Mark the 50% (amplitude) levels with the scope's vertical cursors.

25. Using the FET probe, look at the RECOVERED CLOCK signal at pin 19 of U5.

    Falling edge of RECOVERED CLOCK signal is within 4 nanoseconds of NRAIL's center (see Figure 3.35). Go to step 28.

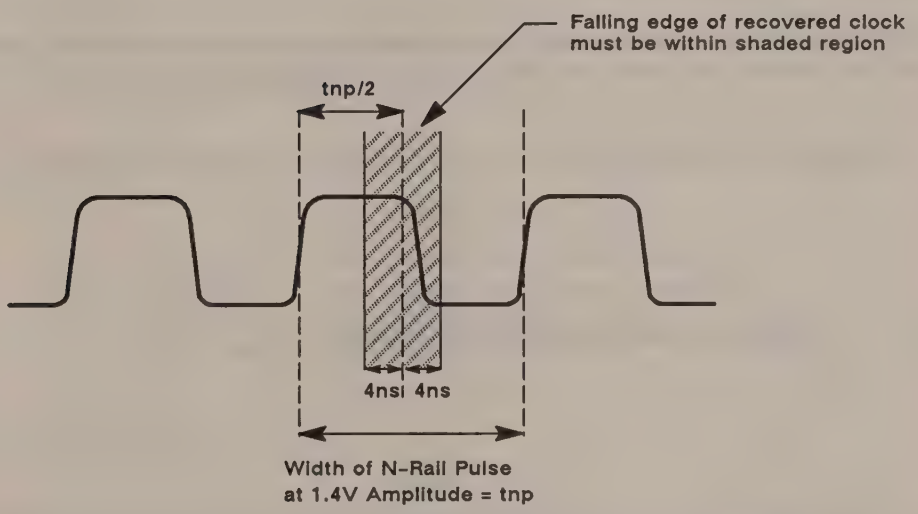

Figure 3.35. Correct Phasing of Recovered Clock

Falling edge of RECOVERED CLOCK signal is not within 4 nanoseconds of NRAIL's center. Replace R117 with new resistor between 1.5 kilohms and 3.3 kilohms. Repeat steps 24 and 25 until the two signals are in the correct juxtaposition. Then go to step 30.

26. Type **REP 9-RX2 REM REF 00:01:00 RUN <CR>** and verify there are no errors. Type **STOP <CR>.**

27. Disconnect long test cable. Type **LEVEL DSX-LOW** and then type **LEVEL 4-TX2 DSX.** Connect the transmitter to the receiver with standard cable. Type **REP 9-RX2 REM REF 00:01:00 RUN <CR>** and verify no errors. Type **STOP <CR>.**

28. Type **LEVEL 4-TX2 LOW,** then type **REP 9-RX2 REM REF 00:01:00 RUN <CR>** and verify no errors. Type **STOP <CR>.**

29. Disconnect and reconnect test cable and verify that frequency is 44.736 MHz.

30. Type **LEVEL 4-TX2 DSX-MON.** Type **REP 9-RX2 REM REF 00:01:00 RUN <CR>** and verify there are no errors. Type **<STOP <CR>.**

31. Type **LEVEL 4-TX2 DSX** and connect transmitter and receiver through a 26 dB pad. Type **REP 9-RX2 REM REF 00:01:00 RUN <CR>** and verify no errors. Type **STOP <CR>.**

This completes the DS3 channel calibration and it is all you can do with the demux card.

3.3.5 DS3 2x2 Card, Channel 1 Transmitter

NOTE

Replacements for some integrated circuits on the DS3 2x2 card are only available from Scientific-Atlanta. They are in the Parts List, Chapter 4, but for your convenience, they're listed here too.

Reference Designator	Scientific-Atlanta Part Number
U2	327877
U3	327878
U4	327877
U5	327876
U8	327875
U11	327877
U12	327878
U13	327877

U14	327876
U17	327875
U18	327875
U21	304112
U23	309225
U24	309226
U25	309227
U29	309228
Z1	327940
Z2	327940

Several voltage and oscilloscope readings you'll be making will vary, depending on the data pattern you have selected. Which data pattern you choose isn't critical; however, to keep your readings consistent, once you choose a pattern, don't change it.

Have the 2x2 card schematic handy and refer to Figure 3.36 to locate card components. We're checking Channel 1 of a transmitter on a DS3 2x2 card in slot 11.

NOTE

The symptom of our problem is no bipolar signal at DS3-TX1 or a bipolar signal that doesn't match the template. Disconnect rear-panel cables. Put the 2x2 card on the Scientific-Atlanta card extender.

Step One: Check Clock Oscillator U21.

1. Use oscilloscope to check for clock pulse +5 volts, 44.736 MHz at output of crystal oscillator U21, pins 4 and 8 (square pad is pin 1, number pins counterclockwise looking from the front of the card).

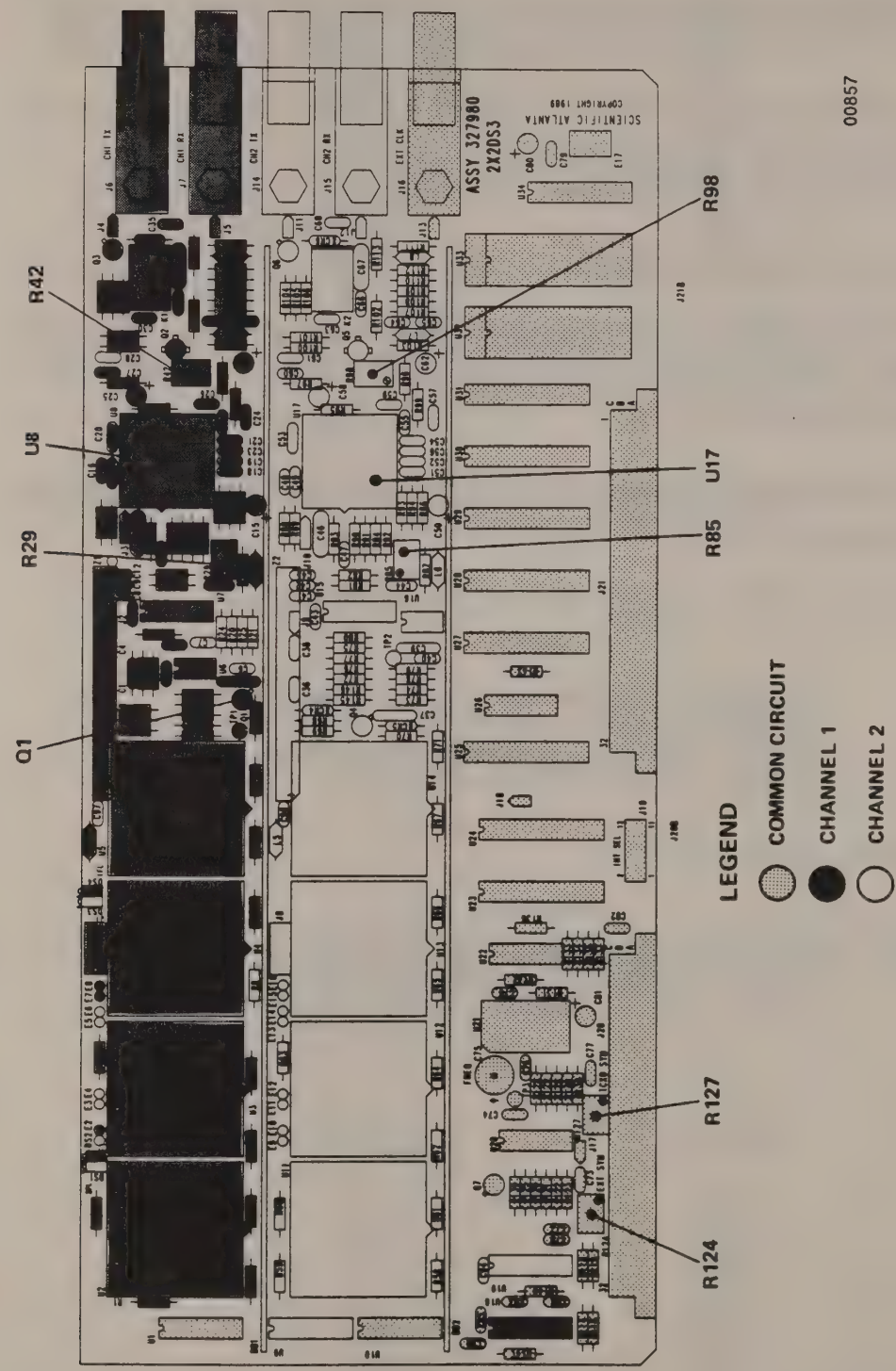

Figure 3.36. DS3 2x2 Card Components

Output signal is correct. Oscillator is OK but something else is wrong. See **Step Two.**

Output signal is not there. Check input pin 14 for +5 volts dc.

Input is 0 volts. Check Mothercard, Section 3.3.19.

Input is +5 volts. Replace oscillator U21 and check output of replacement U21 for clock pulse.

Output signal is correct. Check 2x2 transmitter card output at DS3-TX1 for bipolar signal that meets template specifications, see Figure 3.37.

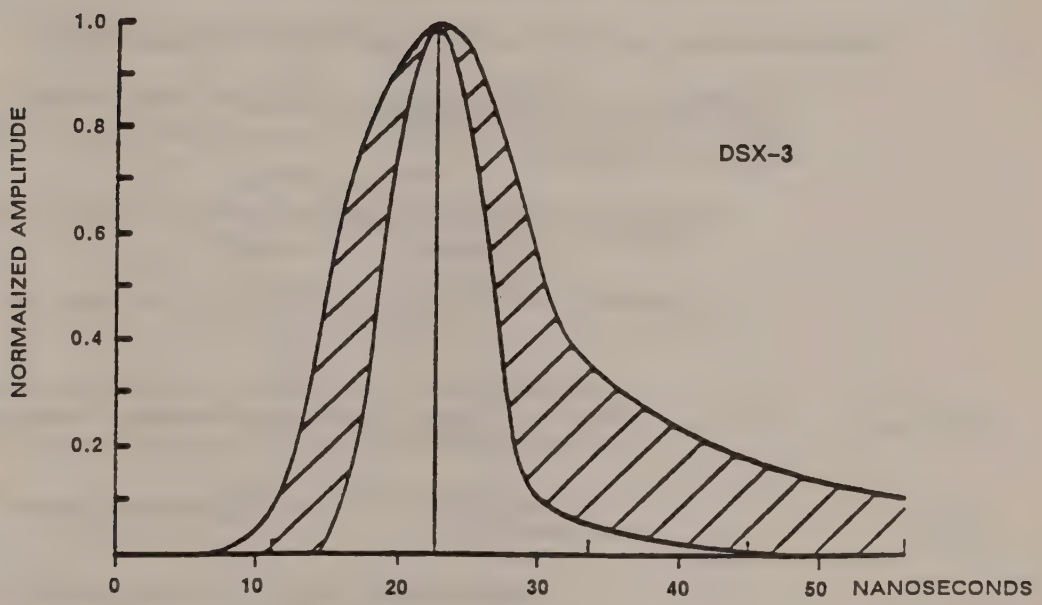

Figure 3.37. DSX DS3 2x2 Transmitter Output Signal

Transmitter output meets specifications. Good, the oscillator was the problem. Remove card extender; plug 2x2 card back into analyzer, and replace analyzer top. Turn on the analyzer and repeat procedures in Section 3.2 that apply to this card.

Transmitter output does not meet specifications. You have problems other than your oscillator. Go to **Step Two.**

2. Check input of U2, pin 16 for +5 volts clock pulse.

   Correct clock pulse at pin 29 of U5. All components from the output of oscillator U21 to pin 16 of U2 are good but the transmitter output is still bad. Check amplifier Z1, **Step Three.**

Step Two: Check Buffer U20.

1. Check for clock pulse at pin 16 of U2.

   No clock pulse at pin 16 of U2. Check for clock pulse at pin 8 of U20.

   Clock pulse at pin 8 of U20. Check U18, Channel 1 clock select, pin 16 for clock pulse.

   Clock pulse at pin 16 of U18. Replace U18.

   No clock pulse at pin 8 of U20. Check for clock pulse at pin 8 of oscillator U21.

   Clock pulse at pin 8 of U21, but not at pin 8 of U20. With your oscilloscope measuring the pulse at pin 8 of U20, adjust R127 until you get a +5 volts clock pulse with a 50/50 duty cycle, see Figure 3.36.

   Can't get +5 volts clock pulse at pin 8 of U20. Replace U20, and readjust R127. Replace R127 if necessary.

   +5 volts clock pulse at pin 8 of U20. Check for +5 volts clock pulse at pin 16 of U2.

   +5 volts clock pulse at pin 16 of U2. Check output at DS3-TX1, see Figure 3.33. If bipolar signal meets specifications, reassemble analyzer and repeat procedures in Section 3.2 that apply to this card.

   No pulse at pin 16 of U2. Replace U20, then check output at DS3-TX1, see Figure 3.37.

   Analyzer output correct. Reassemble analyzer and repeat procedures in Section 3.2 that apply to this card.

   Analyzer output not correct. Once again, check input of U2 and pin 16.

   U2 input correct. Check U5, U2 and U3, see **Step Four.**

   U2 input still not correct.

Let's review. Oscillator U21 is good, buffer U20 is good. But your transmitter output at DS3-TX1 is not right, and your input to U2 is not right.

2. Check output of Channel 1 clock selector U18, pin 3.

No output at pin 3 of U18. Check the two selector lines at the input of U18, pins 1 and 2. Logic levels at both pins must be zero for U18 to produce a clock pulse.

Logic ones at U18, pins 1 and 2. Check DS3 setup to see that your clock is internal. Here's how you do that.

Type **ADDR 11-TX1<CR>.** Then check status by typing **SETUP<CR>.** What you want to see is Figure 3.38, with the CLOCK entry INTERNAL.

```
REMOTE>addr 11-TX1

REMOTE (11-TX1)>setup

          Channel   :  DS3 11-TX1
       Tx Output    :  ON
            Level   :  DSX
            Frame   :  M13
          Pattern   :  PRBS-15
            Clock   :  INTERNAL
         Tx-Busy    :  OFF
             Xbit   :  1

           Errors   :  Pattern: BIT    Frame: FBIT    Coding: BPV

REMOTE (4-TX1)>
```

02862

Figure 3.38. DS3 Transmitter Setup Screen

To change the CLOCK setting, if you need to, type **CLOCK INTERNAL<CR>.** The screen won't change until you type **SETUP<CR>.**

INTERNAL CLOCK is selected and there are still logic ones at pins 1 or 2 of U18. Check U5, pins 29 and 32, for logic ones.

Logic ones on pins 29 and 32 of U5. Replace U5.

Now, you have checked the transmitter circuit up to the input of U2 and everything is in order. However, the output of the transmitter at DS3-TX1 still does not meet template specifications. The next step is to check output amplifier Z1.

Step Three: Check Amplifier Z1.

1. Type **SETUP<CR>**. You'll see a setup screen similar to Figure 3.39. Type **LEVEL DSX <CR> PATTERN 1010**. This puts a logic one at input pin 22 of output amplifier Z1.

2. Check Z1 input pins 10, 22, 21 and 19 of amplifier Z1. Pin 22 should have +5 volts,, pins 10, 21 and 19 should have a zero voltage.

   Input voltages at pins 10, 22, 21 or 19 are not correct. Replace U5.

3. Check Z1 input at pins 5 and 4; it should look like Figure 3.39.

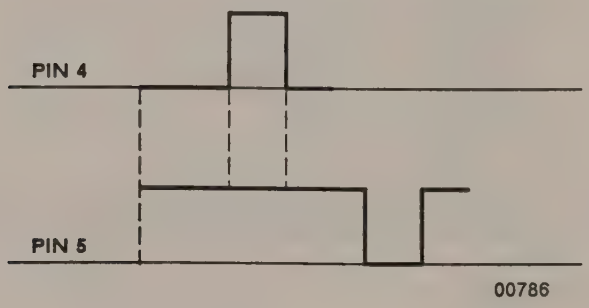

Figure 3.39. Amplifier Z1 Input

Input of amplifier Z1 at pins 10, 22, 21, 19, 5 and 4 is correct. Check output at pin 16 for a +1 volt peak, bipolar signal, see Figure 3.37.

Output of Z1 at pin 16 is correct. Check output of transmitter at DS3-TX1 for bipolar signal within template shown in Figure 3.37. If output meets specifications, reassemble analyzer and repeat procedures in Section 3.2 that apply to this card.

Output of Z1 at pin 16 is not correct. Replace Z1.

Now, you have checked the transmitter card circuit up to the input of U2 and everything is in order. However, U2 is interconnected with U5 and U3, and the next step is to check the three chips together.

Step Four: Check U5, U2 and U3.

You have checked everything from the input of oscillator U21 to the input pin 16 of U2, and everything from the output amplifier Z1 to the output of the DS3 transmitter. Now, the input to pin 16 of U2 is correct, but the transmitter output is not correct.

Input signal to U2 at pin 16 is correct. Check U5 for a clock pulse at input pin 25 and your selected data pattern at input pin 24.

No clock pulse at pin 25 of U5. Replace U2 and recheck for clock pulse at pin 25 of U5.

Clock pulse at pin 25 of U5. Check output of transmitter at DS3-TX1 and compare it with Figure 3.37.

Output signal meets specifications. U2 was your problem. Reassemble analyzer and repeat procedures in Section 3.2 that apply to this card.

Clock pulse at input pin 25 but no data pulse at input pin 24. Check U2 output; pin 19 should have clock pulse, pin 20 should have your selected data pattern.

Pulse absent at either pin 19 or 20 of U2. Replace U2 and recheck for pulses at pins 24 and 25 of U5.

Correct pulses at pins 24 and 25 of U5. Check transmitter output at DS3-TX1 and compare to Figure 3.37. If output signal meets specifications, reassemble analyzer and repeat procedures in Section 3.2 that apply to this card.

This is all you can do to the Channel 1 transmitter part of the DS3 2x2 card.

3.3.6 DS3 2x2 Card, Channel 2 Transmitter

NOTE

Replacements for some integrated chips on the DS3 2x2 card are only available from Scientific-Atlanta. They are in the Parts List, Chapter 4, but for your convenience, they're listed here too.

Reference Designator	Scientific-Atlanta Part Number
U2	327877
U3	327878
U4	327877
U5	327876
U8	327875
U11	327877
U12	327878
U13	327877
U14	327876
U17	327875
U18	327875
U21	304112
U23	309225
U24	309226
U25	309227
U29	309228
Z1	327940
Z2	327940

Several voltage and oscilloscope readings you'll be making will vary, depending on the data pattern you have selected. Which data pattern you choose isn't critical; however, to keep your readings constant, once you choose a pattern, don't change it.

Have the 2x2 card schematic handy (Chapter 5) and refer to Figure 3.40 to locate card components. We're checking Channel 2 of a transmitter on a DS3 2x2 card in slot 11.

NOTE

The symptom of our problem is no bipolar signal, or a distorted bipolar signal, at DS3-TX2. Disconnect rear-panel cables. Put the 2x2 card on the Scientific-Atlanta card extender.

Step One: Check Clock Oscillator U21.

1. Use oscilloscope to check for clock pulse +5 volts, 44.736 MHz at output of crystal oscillator U21, pins 4 and 8 (square pad is pin 1, number pins counterclockwise, looking from the front of the card.)

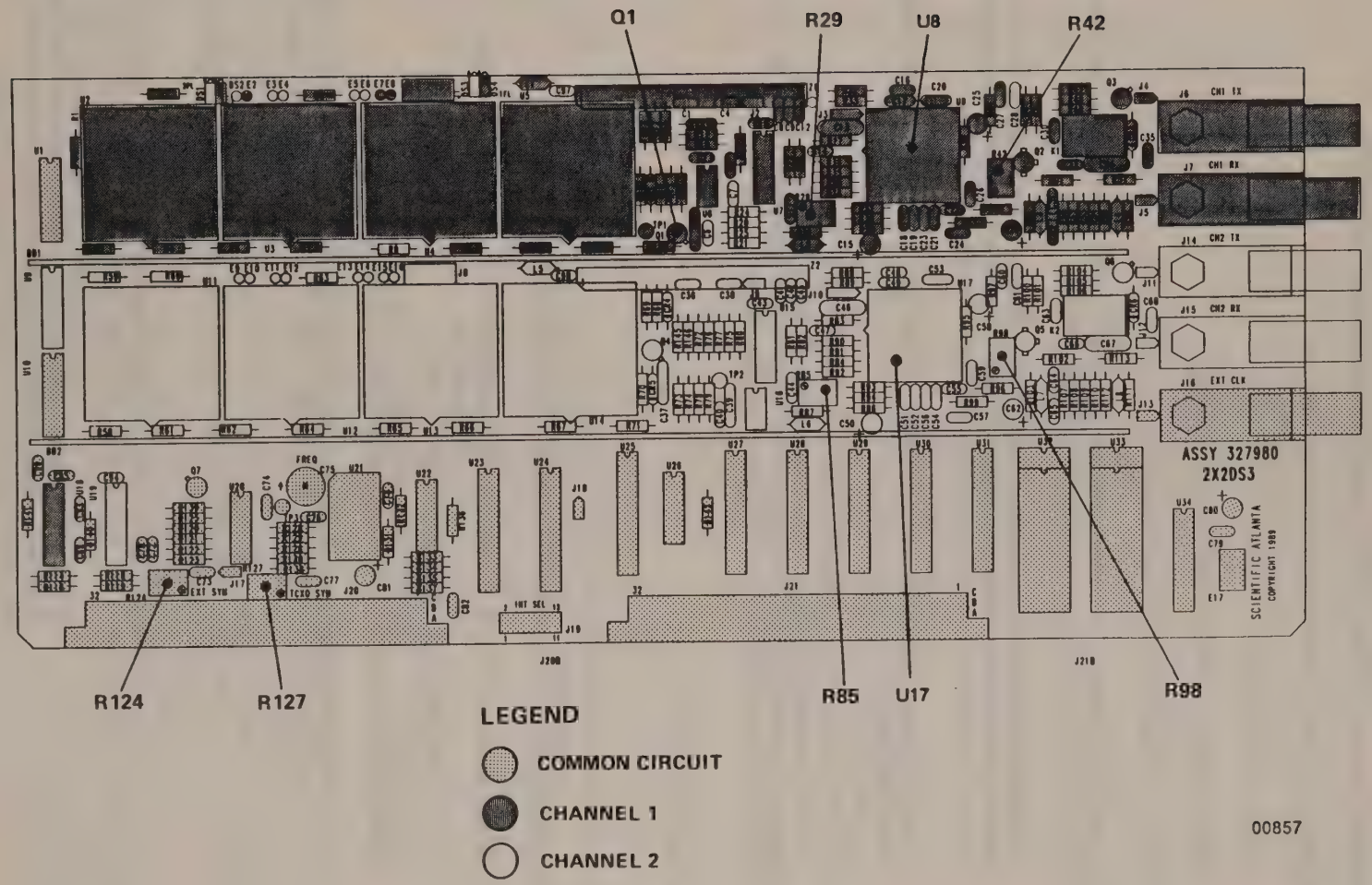

Figure 3.40. DS3 2x2 Card Components

Output signal is correct. Oscillator is OK but something else is wrong. See **Step Two.**

Output signal is not there. Check input pin 14 for +5 volts dc.

Input is +5 volts. Replace oscillator U21.

Input is 0 volts. Check Mothercard, Section 3.3.19.

2. Check output of replacement U21 for clock pulse.

Output of new U21 is correct. Reconnect rear-panel cables and check 2x2 transmitter card output at DS3-TX2 for bipolar signal that meets template specifications, see Figure 3.41.

Transmitter output meets specifications. Good, the oscillator was the problem. Remove card extender; reconnect rear-panel cables. Plug 2x2 card back into analyzer, and replace analyzer top. Turn on the analyzer and repeat procedures in Section 3.2 that apply to this card.

Transmitter output does not meet specifications. You have problems other than your oscillator. Go to **Step Two.**

3. Check input of U14, pin 29 for +5 volts clock pulse.

Correct clock pulse at pin 16 of U11. All components from the output of oscillator U21 to pin 16 of U11 are good but the transmitter output is still bad. Check amplifier Z2, **Step Three.**

Step Two: Check Buffer U20.

1. Check for clock pulse at pin 16 of U11.

No clock pulse at pin 16 of U11. Check for clock pulse at pin 8 of U20.

Clock pulse at pin 8 of U20. Check U19, Channel 2 clock select, pin 16 for clock pulse.

Clock pulse at pin 16 of U19. Replace U19.

No clock pulse at pin 8 of U20. Check for clock pulse at pin 8 of oscillator U21.

Clock pulse at pin 8 of U21, but not at pin 8 of U20. With your oscilloscope measuring the pulse at pin 8 of U20, adjust R127 until you get a +5 volts clock pulse with a 50/50 duty cycle, see Figure 3.40.

Can't get +5 volts clock pulse at pin 8 of U20. Replace U20, and readjust R127. Replace R127 if necessary.

+5 volts clock pulse at pin 8 of U20. Check for +5 volts clock pulse at pin 29 of U14.

+5 volts clock pulse at pin 16 of U11. Check output at DS3-TX2, see Figure 3.42. If bipolar signal meets specifications, reassemble analyzer and repeat procedures in Section 3.2 that apply to this card.

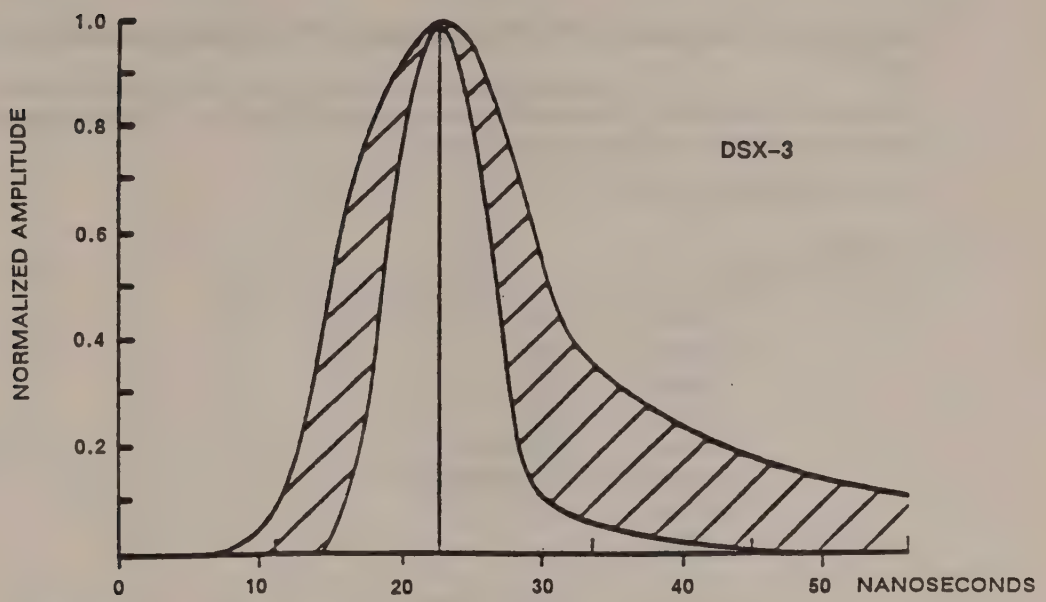

Figure 3.41. DSX DS3 2x2 Transmitter Output Signal

No pulse at pin 16 of U11. Replace U20, then check output at DS3-TX2, see Figure 3.41.

Analyzer output correct. Reassemble analyzer and repeat procedures in Section 3.2 that apply to this card.

Analyzer output not correct. Once again, check input of U11 pin 16.

U11 input correct. Check U14, U11 and U12, see **Step Four**.

U11 input still not correct.

2. Let's review. Oscillator U21 is good, buffer U20 is good. But your transmitter output at DS3-TX2 is not right, and your input to U11 is not right.

3. Check input of Channel 2 clock selector U19, pin 16.

No input at pin 16 of U19. Check the two selector lines at the input of U19, pins 1 and 2. Logic levels at both pins must be zero for U19 to produce a clock pulse.

Logic ones at U19, pins 1 and 2. Check DS3 setup to see that your clock is internal. Here's how you do that.

Type **ADDR 11-TX2<CR>**. Then check status by typing **SETUP<CR>**. What you want to see is Figure 3.42 with the CLOCK entry INTERNAL.

```
REMOTE>addr 11-TX2

REMOTE
(11-TX2)>setup

          Channel   :  DS3 11-TX2
       Tx Output    :  ON
            Level   :  DSX
            Frame   :  M13
          Pattern   :  PRBS-15
            Clock   :  INTERNAL
         Tx-Busy    :  OFF
             Xbit   :  1

           Errors   :  Pattern: BIT     Frame: FBIT     Coding: BPV

REMOTE (11-TX2)>
```

02860

Figure 3.42. DS3 Transmitter Setup Screen

To change the CLOCK setting, if you need to, type **CLOCK INTERNAL<CR>**. The screen won't change until you type **SETUP<CR>**.

INTERNAL CLOCK is selected and there are still logic ones at pins 1 or 2 of U19. Check U14, pins 29 and 32 for logic ones.

Pins 29 and 32 of U14 have logic ones. Replace U14.

Now, you have checked the transmitter circuit up to the input of U14 and everything is in order. However, the output of the transmitter at DS3-TX2 still does not meet template specifications. The next step is to check output amplifier Z2.

Step Three: Check Amplifier Z2.

1. Type **SETUP<CR>**. You'll see a setup screen similar to Figure 3.42. Type **LEVEL DSX <CR>PATTERN 1010<CR>**. This puts a logic one at input pin 22 of output amplifier Z2.

2. Check Z2 input pins 10, 22, 21 and 19 of amplifier Z2. Pin 22 should have +5 volts, pins 10, 21 and 19 should have a zero voltage.

   Input voltages at pins 10, 22, 21 or 19 are not correct. Replace U14.

3. Check Z2 input at pins 5 and 4; it should look like Figure 3.43.

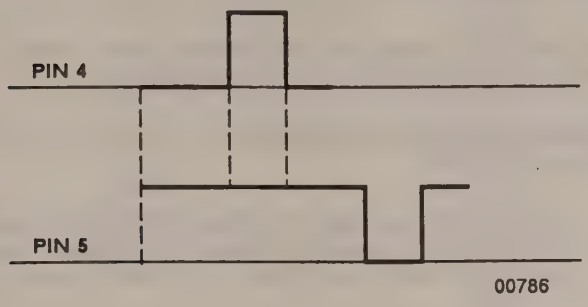

Figure 3.43. Amplifier Z2 Input

Input of amplifier Z2 at pins 10, 22, 21, 19, 5 and 4 is correct. Check output at pin 16 for a +1 volt peak bipolar, see Figure 3.41.

Output of Z2 at pin 16 is correct. Check output of transmitter at DS3-TX2 for bipolar signal within template shown in Figure 3.41. If output meets specifications, reassemble analyzer and repeat procedures in Section 3.2 that apply to this card.

Output of Z2 at pin 16 is not correct. Replace Z2.

Now, you have checked the transmitter card circuit up to the input of U11 and everything is in order. However, U11 is interconnected with U11 and U12, and the next step is to check the three chips together.

Step Four: Check U14, U11 and U12.

You have checked everything from the input of oscillator U21 to the input pin 16 of U11, and everything from the output amplifier Z2 to the output of the DS3 transmitter. Now, the input to pin 29 of U14 is correct, but the transmitter output is not correct.

Input signal to U14 at pin 29 is correct. Check U14 for a clock pulse at input pin 25 and your selected data pattern at input pin 24.

No clock pulse at pin 25 of U14. Replace U11 and recheck for clock pulse at pin 25 of U14.

Clock pulse at pin 25 of U5. Check output of transmitter at DS3-TX2 and compare it with Figure 3.41.

Output signal meets specifications. U11 was your problem. Reassemble analyzer and repeat procedures in Section 3.2 that apply to this card.

Clock pulse at input pin 25 but no data pulse at input pin 24. Check U11 output; pin 19 should have clock pulse, pin 20 should have your selected data pattern.

Pulse absent at either pin 19 or 20 of U11. Replace U11 and recheck for pulses at pins 24, 25 and 29 of U14.

Correct pulses at pins 24, 25 and 29 of U14. Check transmitter output at DS3-TX2 and compare to Figure 3.41. If output signal meets specifications, reassemble analyzer and repeat procedures in Section 3.2 that apply to this card.

You've done all you can do to the Channel 2 transmitter part of the DS3 2x2 card.

3.3.7 DS3 2x2 Receiver, Channel 1

IMPORTANT NOTE

WHEN YOU MUST REPLACE U8... Four times in this procedure, you may need to replace U8. Should this happen, you must calibrate the DS3 circuit, before you go to the next step. This calibration procedure is **Step Five,** and is only done **WHEN YOU REPLACE U8.**

NOTE

Replacements for some integrated circuits on the DS3 2x2 card are only available from Scientific-Atlanta. They are in the Parts List, Chapter 4, but for your convenience, they're listed here too.

Reference Designator	Scientific-Atlanta Part Number
U2	327877
U3	327878
U4	327877
U5	327876
U8	327875
U11	327877
U12	327878
U13	327877
U14	327876
U17	327875
U18	327875
U21	304112
U23	309225
U24	309226
U25	309227
U29	309228
Z1	327940
Z2	327940

Several voltage and oscilloscope readings you'll be making will vary, depending on the data pattern you have selected. Which data pattern you choose isn't critical; however, to keep your readings constant, once you choose a pattern, don't change it.

NOTE

These procedures are for a DS3 Channel 1 receiver on a 2x2 card in slot 11 and a good DS3 transmitter card in slot 4.

Have the 2x2 receiver schematic handy and refer to Figure 3.44 to locate components.

1. Put the receiver card on the Scientific-Atlanta card extender.
2. Disconnect rear-panel cables.
3. Check for supply voltages of +5 volts dc at connector J21, row C, pin 2, see Figure 3.45.
4. Type **ADDR 11-RX1<CR>**.

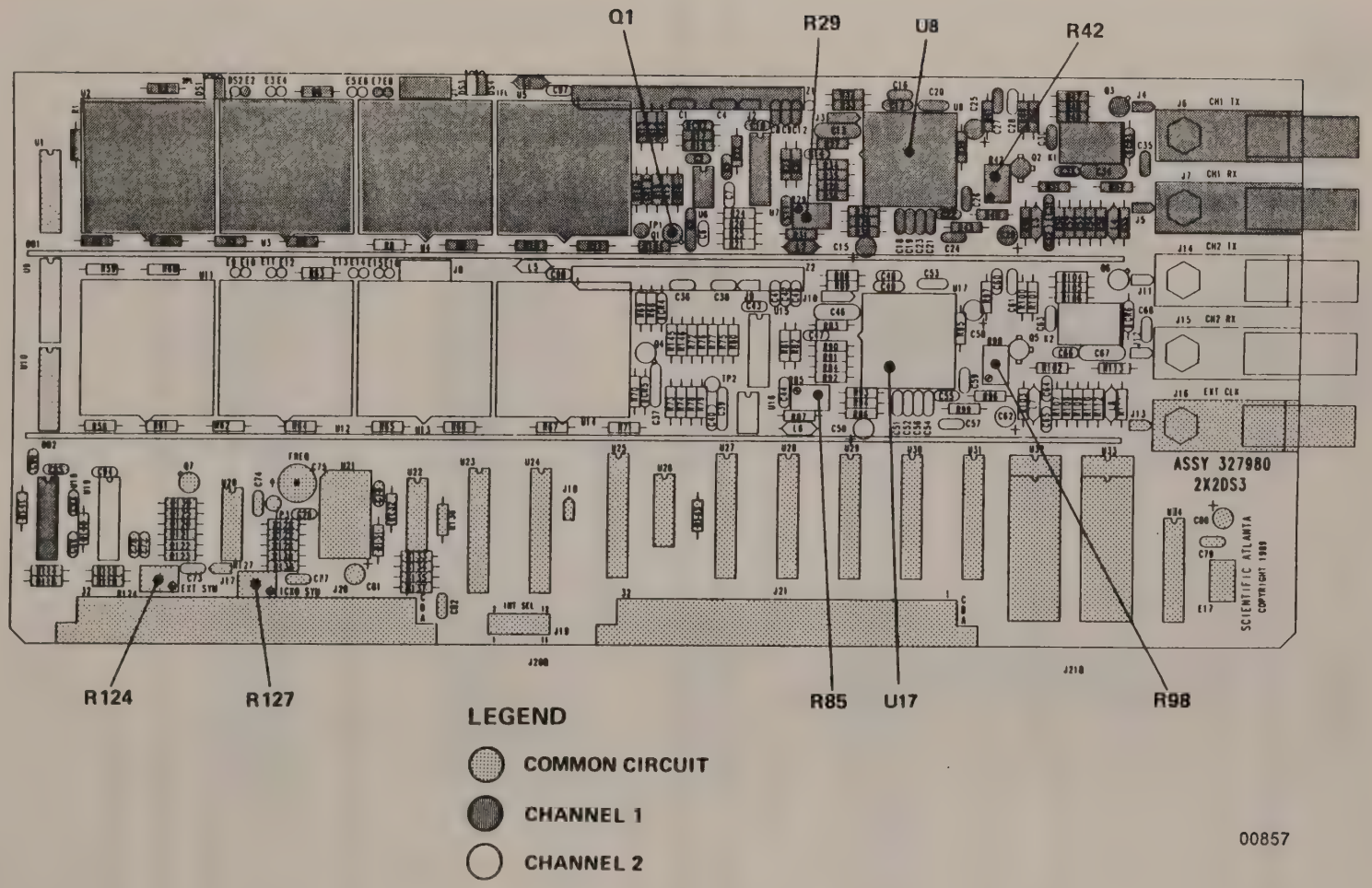

Figure 3.44. DS3 2x2 Components

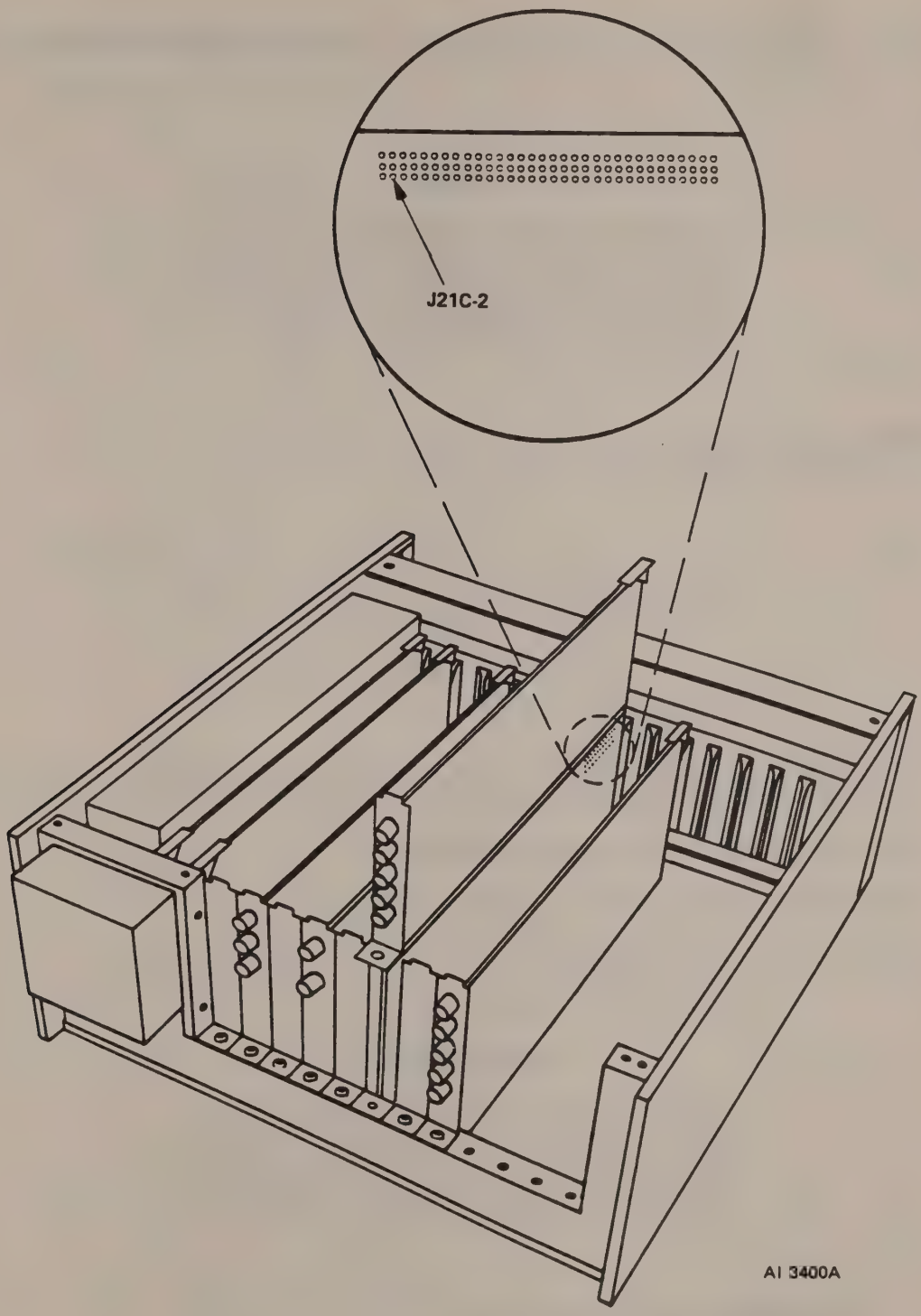

Figure 3.45. DS3 2x2 Card Demux Voltages

Step One: Type **STATUS<CR>**. In the upper right of the STATUS screen the ALARMS entry will be LOS, OOF or LOP.

NOTE

The STATUS screen shows a hierarchy of failures; LOS, OOF then LOP, e.g., Loss Of Signal, Out Of Frame and then Loss Of Pattern. Or, to put it a different way, you can't solve an LOP problem until you have framing, and you can't solve a framing problem until you have a signal.

ALARMS entry shows LOS.

NOTE

In this procedure you will be asked to look for data pattern A. Here's how to set data pattern A.

1. Connect DS3-TX1 in slot 4 to DS3-RX1 in slot 11.
2. Type **ADDR 4-TX1<CR> SETUP<CR>**. What you want to see is Figure 3.46 with the CLOCK entry INTERNAL. Change CLOCK entry, if you need to, by typing **CLOCK INTERNAL<CR>**.
3. Type **PATTERN 1010<CR>**. These entries will produce data pattern A, see Figure 3.47.
4. Use oscilloscope to check output pin 11 of U8 for data pattern A.

   No data pattern A at output pin 11 of U8. Check input pin 23 of U8 for data pattern A.

IMPORTANT NOTE

WHEN YOU MUST REPLACE U8... Four times in this procedure, you may need to replace U8. Should this happen, you must calibrate the DS3 circuit, before you go to the next step. This calibration procedures is **Step Five**, and is only done **WHEN YOU REPLACE U8.**

Data pattern A at input pin 23 of U8. Replace U8.

```
REMOTE>addr 4-TX1

REMOTE (4-TX1)>setup

                Channel  :  DS3 4-TX1
              Tx Output  :  ON
                  Level  :  DSX
                  Frame  :  M13
                Pattern  :  PRBS-15
                  Clock  :  INTERNAL
              Tx-Busy    :  OFF
                  Xbit   :  1

                Errors   :  Pattern: BIT    Frame: FBIT    Coding: BPV

REMOTE (4-TX1)>
```

02859

Figure 3.46. DS3 2x2 Transmitter Setup Screen

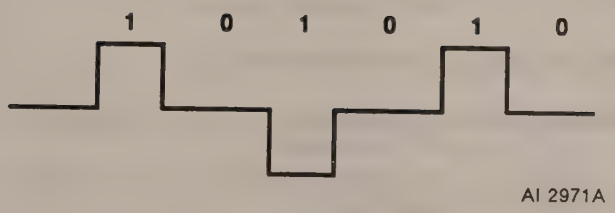

Figure 3.47. Data Pattern A, 1010

Data pattern A not at input pin 23 of U8. Check input to relay K1, pin 10 for data pattern A.

Data pattern A at pin 10 of relay K1. Type **LEVEL DSX-LOW<CR>**. This puts data pattern A at pin 3 of relay K1. Check pin 3 of relay K1 for signal.

No signal at pin 3 of K1. Check base of Q2 for data pattern A.

No data pattern A at base of Q2. Replace Q2. Type **LEVEL HIGH<CR>**. Check pin 3 of relay K1 for signal.

No signal at pin 3 of K1. Replace K1.

Data pattern A is at output pin 11 of U8. With oscilloscope, check output of U8 at pin 30 for TTL clock pulse at 44.736 MHz.

There are three possibilities: There is no TTL pulse at pin 30 of U8, there is a TTL pulse at the correct frequency or there is a TTL pulse there, but the frequency is wrong.

IMPORTANT NOTE

WHEN YOU MUST REPLACE U8... Four times in this procedure, you may need to replace U8. Should this happen, you must calibrate the DS3 circuit, before you go to the next step. This calibration procedures is **Step Five,** and is only done **WHEN YOU REPLACE U8.**

No TTL pulse at pin 30 of U8. Replace U8.

TTL pulse at 44.736 MHz is at pin 30 of U8. Check for dc voltage at pin 28 of U8. Should be +5 volts.

-5 volts at pin 28 of U8. Replace U8.

+5 volts dc at pin 28 of U8. Check U5, pin 12 for a logic zero (< +0.4 volts).

Pin 12 of U5 has voltage. Replace U6. Check output of U5 at pin 58 for a 50-millisecond square pulse.

Square pulse at pin 58 of U5. Replace U5.

No square pulse at pin 58 of U5. Check input of buffer U22, pin 9.

Square pulse at pin 9 of U22. Replace U22.

No square pulse at pin 9 of U22. Run Diagnostic Test, Section 3.3.18.

TTL pulse at pin 30 of U8 but not at 44.736 MHz. Set up DS3 Clock Recovery.

(1) Connect frequency counter to TP1. Jumper pins 1 and 2 of J3 and adjust R29 for a frequency reading of 45.x MHz.

(2) Short pin 6 of U8 to -5.2 volts(pin 8). Frequency is 38 MHz.

Frequency is greater than 38 MHz. Replace U8.

Frequency is 38 MHz or less. Go to next step in this procedure.

(3) Remove jumper between pins 6 and 8. Adjust R29 for a frequency of 47 MHz.

(4) Jumper pins 1 and 2 of J3. Connect external all 1s DS3 signal to RX1. Frequency should be 44.736 MHz. (clock is locked to 44.736 MHz).

Frequency is 44.736 MHz. Adjust R29 until voltage at pin 3 of U8 is 0 volts ± 0.25 volts. Spray Freeze-mist on U8 (frequency may drift from 44.736 MHz). Warm U8 to 40°C. You should not lose signal or have any errors.

Frequency is not 44.736 MHz (clock does not lock to 44.736 MHz). Check U5, pin 12 for a logic high.

Pin 12 of U5 is not at a logic high. Check U6, pin 1 for +5 volts.

Pin 1 of U6 is not +5 volts. Check U6, pin 3 to be more negative than U6, pin 2.

Pin 3 of U6 is more negative than pin 2 of U6. Replace U8.

Pin 12 of U5 is at a logic high. Set oscilloscope on 1-volt scale, and check signal at pin 6 of U8 for a triangular pulse going above and below zero.

Triangular pulse at pin 6 of U8. Replace U8.

No triangular pulse at pin 6 of U8. Check U16, pin 1 for triangular pulse.

No triangular pulse at pin 1 of U16. Check U26, pin 8 for 100-millisecond square pulse.

Square pulse at pin 8 of U26. Replace U16.

Square pulse not at pin 8 of U26. Check pin 9 of U26 for square wave.

Square wave is at pin 9 of U26. Replace U26.

Square wave not at pin 9 of U26. Replace U24.

Triangular pulse at pin 1 of U16. Replace Q1.

5. Let's review. U8 is good, and so are the components associated with it. This should take care of the LOS problem.

Step Two: Type **ADDR 11-RX1<CR> STATUS<CR>.**

STATUS screen ALARMS entry shows OOF or LOP. Check to see if framing is on. Here's how you do that.

1. Type **ADDR 4-TX1<CR> FRAME CPAR<CR>.**
2. Type **ADDR 11-RX1<CR> STATUS<CR>.**

ALARMS entry still shows OOF or LOP. Check that U5 is decoding properly.

Type **ADDR 4-TX1<CR> FRAME 1111<CR>.**

Type **ADDR 11-RX1<CR> STATUS<CR>.**

ALARMS entry shows OOF or LOP. With oscilloscope, check pin 55 of U5 for an all 1s data with an occasional (zero) framing bit. The data looks like Figure 3.48.

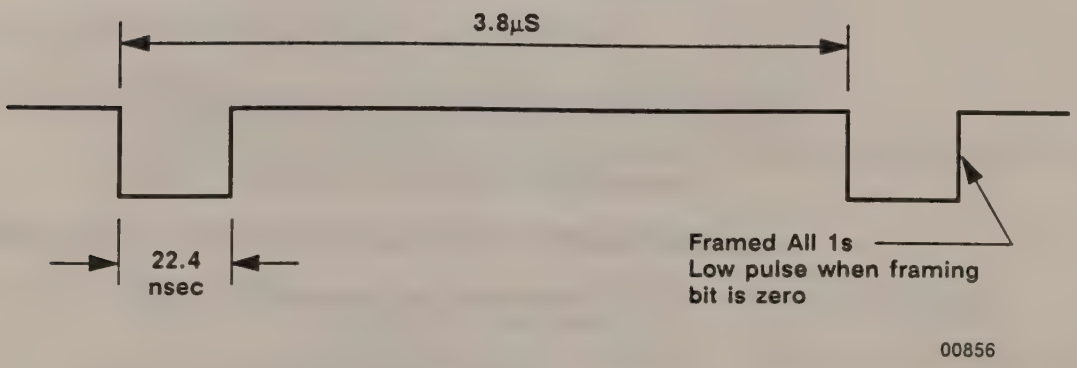

Figure 3.48. All Ones Data with Framing Bits

Data pulse with framing bits at pin 55 of U5. Replace U4 and type **STATUS<CR>.**

No data pulse with framing bits at pin 55 of U5. Replace U5 and type **STATUS<CR>**.

ALARMS entry shows CLEAR. Go to **Step Four:** Check Frequency.

ALARMS entry shows LOP. Replace U3 and type **STATUS<CR>**.

ALARMS entry shows CLEAR. Go to **Step Four:** Check Frequency.

ALARMS entry still shows LOP. Replace U4.

Step Three: Check BLUE pattern.

Type **ADDR 4-TX1<CR>** then type **PATTERN BLUE<CR>** then type **ADDR 11-RX1<CR> STATUS<CR>**.

ALARMS entry shows CLEAR. Go to **Step Four:** Check Frequency.

ALARMS entry shows BLUE. Take 2x2 card off card extender, plug into mothercard, reassemble analyzer and repeat procedures of Section 3.2, making sure you check all transmitters with all receivers.

Step Four: Check Frequency.

Type **ADDR 11-RX1<CR> STATUS<CR>**. Frequency entry shows, for an example, "Freq.(44.73642) +9ppm", which means the DS3 frequency is 44.73642 MHz.

The screen shows "Freq.(44.736...)...". DS3 output frequency is good. Remove card extender, plug demux card back into mothercard, replace card retainers and replace analyzer top. Turn on analyzer and repeat front-panel test, Section 3.2.

The screen shows "Freq (n/a)". With oscilloscope, check signal at pin 11 of U1 for a TTL clock pulse at 6.176 MHz.

No clock pulse at pin 11 of U1. Check pin 7 of connector J21B for clock pulse.

Clock pulse at pin 7 of J21B. Replace U24.

Clock pulse not at pin 7 of J21B. Check Mothercard, Section 3.3.19.

Clock pulse at pin 11 of U1. Check pin 13 of U1 for 50-millisecond latch signal.

Latch signal at pin 13 of U1. Replace U1. If still no frequency, check 50-millisecond latch signal from real-time clock card with Diagnostic Test, Section 3.3.18.

No latch signal at pin 13 of U1. Replace U24 and then, if necessary, U5.

Step Five: Calibrating the DS3 Circuit.

1. Connect frequency counter to TP1 and jumper pins 1 and 2 of J3. Adjust R29 for a frequency of 45.x MHz.
2. Short pin 6 of U8 to -5.2 volts (pin 8); frequency should be between 38 MHz.

   Frequency greater than 38 MHz. Replace U8 and start procedure over.

   Frequency 38 MHz or less. Go to step 3 of this procedure.
3. Remove the short between pins 6 and 8 of U8 and adjust R29 for a frequency of 47 MHz.
4. Jumper pins 1 and 2 of J3.
5. Connect external all 1s DS3 signal to DS3-RX connector. Frequency is 44.736 MHz (signals are phase locked).
6. Adjust R29 until voltage at pin 3 of U8 is 0 volts ± 0.25 volts.
7. Spray U8 with Freeze-mist (frequency may drift from 44.736 MHz). Heat U8 to 40 °C. There should be no signal loss or errors.
8. Type **LEVEL 4-TX1 HIGH**. Connect the full length of DTA/DAS long test cable (Scientific-Atlanta part number 306159) from DS3 TX1 to DS3 RX1.
9. Type **LEVEL 11-RX1 DSX-LOW.**
10. Connect digital voltmeter to the C5 side of R22 and ground. Remove jumper on J3 and adjust R42 for a voltage between 100 and 105 millivolts.
11. Jumper pins 2 and 3 on J3. Frequency is 44.736 MHz and voltage is less than -225 millivolts.
12. Replace long cable with a short one. Type **LEVEL 4-TX1 LOW.** Frequency stays at 44.736 and voltage stays below -225 millivolts.
13. Type **PATTERN BLUE.** Frequency stays at 44.736 and voltage stays below -225 millivolts.

    Voltage is above -225 millivolts. Adjust R42 until voltage is between -225 millivolts and -255 millivolts.
14. Remove jumper from J3. Voltage is more than +50 millivolts.

    Voltage is between +30 millivolts and +50 millivolts. Adjust R42 until voltage is more than +50 millivolts.
15. Jumper pins 2 and 3 on J3. Voltage is less than -225 millivolts.
16. Type **FRAME 4-TX1 M13<CR> PATTERN PRBS-15<CR> LEVEL DSX.** On the receiver, remove R28 and connect the test circuit to the ASIC like this:

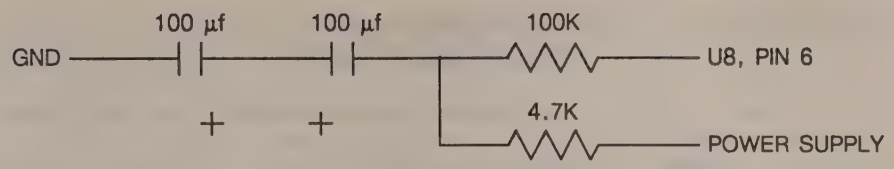

Make sure the lead from pin 6 of U8 to the resistors is less than 6 inches.

17. Type **REP 11-RX1 REM REF 00:00:01 RUN <CR>.** Connect 10 volts DC power supply to the test circuit and set to zero volts.

NOTE

In the next two steps, watch BOTH error seconds and total bit errors. When the error rate is high, error seconds may change but total bit errors may not.

When you can't get a zero error rate at a positive voltage (step 18), adjust the voltage to the smallest negative voltage that just begins to produce errors.

When you can't get a zero error rate at a negative voltage (step 19), adjust the voltage to the smallest positive voltage that just begins to produce errors.

18. Adjust voltage toward +10 volts until receiver begins to make errors, and then adjust voltage toward zero until errors stop. Write down this voltage, including its sign. **You'll need it later. This is V1.**

19. Set test voltage back to zero, then adjust it toward -10 volts until receiver begins to make errors, then adjust voltage toward zero until errors stop. Write down this voltage, including its sign. **This is V2.** Type **STOP <CR>** to stop the test.

20. Calculate V3 = V1 + V2.

    V3 is between +0.5 volts and -0.5 volts. Calibration is correct. Go to step 23.

    V3 is more than +0.5 or less than -0.5 volts. Go to step 21. in this procedure.

21. Choose offset correction resistor from Resistor Table that corresponds to the value of V3 calculated in Step 20. Connect it between -5.2 volts (U8, pin 8 and U8, pin 6).

RESISTOR TABLE
(R in Kilohms, V3 in volts)

	V3			V3			V3	
R	max	min	R	max	min	R	max	min
2210	0.58	0.50	487	2.16	2.11	226	4.65	4.54
1500	0.77	0.58	475	2.22	2.16	221	4.77	4.65
1240	0.86	0.77	464	2.30	2.22	215	4.77	4.77
1180	0.91	0.86	442	2.41	2.30	205	5.14	4.96
1100	0.99	0.91	422	2.53	2.41	200	5.25	5.14
1000	1.07	0.99	402	2.62	2.53	196	5.43	5.25
953	1.12	1.07	392	2.68	2.62	187	5.64	5.43
909	1.17	1.12	383	2.78	2.68	182	5.78	5.64
866	1.23	1.17	365	2.92	2.78	178	6.00	5.78
825	1.29	1.23	348	3.06	2.92	169	6.29	6.00
787	1.35	1.29	332	3.21	3.06	162	6.59	6.29
750	1.42	1.35	316	3.37	3.21	154	6.84	6.59
715	1.49	1.42	301	3.50	3.37	150	7.00	6.84
681	1.56	1.49	294	3.58	3.50	147	7.25	7.00
649	1.64	1.56	287	3.71	3.58	140	7.62	7.25
619	1.72	1.64	274	3.89	3.71	133	8.00	7.62
590	1.81	1.72	261	4.03	3.89	127	8.39	8.00
562	1.87	1.81	255	4.13	4.03	121	8.82	8.39
549	1.92	1.87	249	4.23	4.13	115	9.12	8.82
536	1.99	1.92	243	4.33	4.23	113	9.33	9.12
511	2.06	1.99	237	4.44	4.33	110	9.68	9.33
499	2.11	2.06	232	4.54	4.44	105	10.15	9.68

22. Repeat steps 18, 19, and 20.

    V3 is between -0.5 volts and +0.5 volts. Install correction resistor as R28 and go to step 23.

    V3 is less than -0.5 volts or more than +0.5 volts. Take the correction resistor off and repeat procedure, starting with step 18.

23. Run a one-minute test and verify there are no errors.

24. Type **LEVEL 11-RX1 DSX-LOW.** Then type **LEVEL 4-TX1 DSX.** Connect DS3 TX1 to DS TX, using standard test cable. Run a one-minute test and verify no errors.

25. Type **LEVEL LOW.** Run a one-minute test and verify no errors.

26. Disconnect and reconnect test cable and verify that frequency is 44.736 MHz.

27. Type **LEVEL DSX-MON.** Run a one-minute test and verify no errors.

28. Type **LEVEL DSX.** Connect transmitter and receiver through a 26 dB pad. Run a one-minute test and verify no errors.

This completes the DS3 2x2 receiver, channel 1 calibration.

3.3.8 DS3 2x2 Receiver, Channel 2

IMPORTANT NOTE

WHEN YOU MUST REPLACE U17... Four times in this procedure, you may need to replace U17. Should this happen, you must calibrate the DS3 circuit, before you go to the next step. This calibration procedures is **Step Five,** and is only done **WHEN YOU REPLACE U17.**

NOTE

Replacements for some integrated chips on the DS3 2x2 card are only available from Scientific-Atlanta. They are in the Parts List, Chapter 4, but for your convenience, they're listed here too.

Reference Designator	Scientific-Atlanta Part Number
U2	327877
U3	327878
U4	327877
U5	327876
U8	327875
U11	327877
U12	327878
U13	327877
U14	327876
U17	327875
U18	327875
U21	304112
U23	309225
U24	309226
U25	309227
U29	309228
Z1	327940
Z2	327940

Several voltage and oscilloscope readings you'll be making will vary, depending on the data pattern you have selected. Which data pattern you choose isn't critical; however, to keep your readings constant, once you choose a pattern, don't change it.

NOTE

These procedures are for a DS3 Channel 2 receiver on a 2x2 card in slot 11 with a good DS3 transmitter card in slot 4.

Have the 2x2 card schematic handy and refer to Figure 3.49 to locate components.

1. Put the 2x2 card on the Scientific-Atlanta card extender.
2. Disconnect rear-panel cables.
3. Check for supply voltages of +5 volts dc at connector J21, row C, pin 2, see Figure 3.50.
4. Connect DS3-TX2 in slot 4 to DS3-RX2 in slot 11.

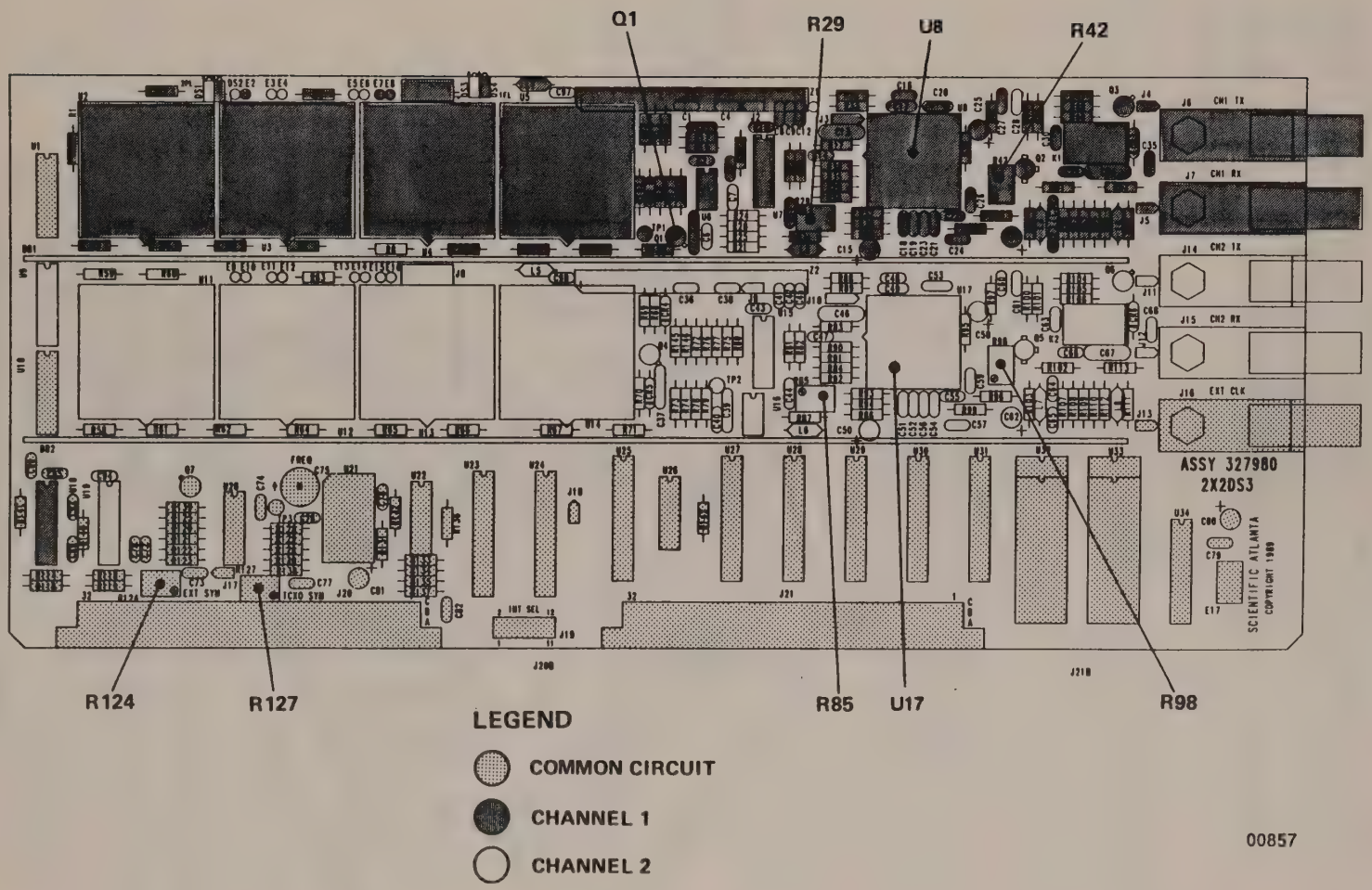

Figure 3.49. DS3 2x2 Card Components

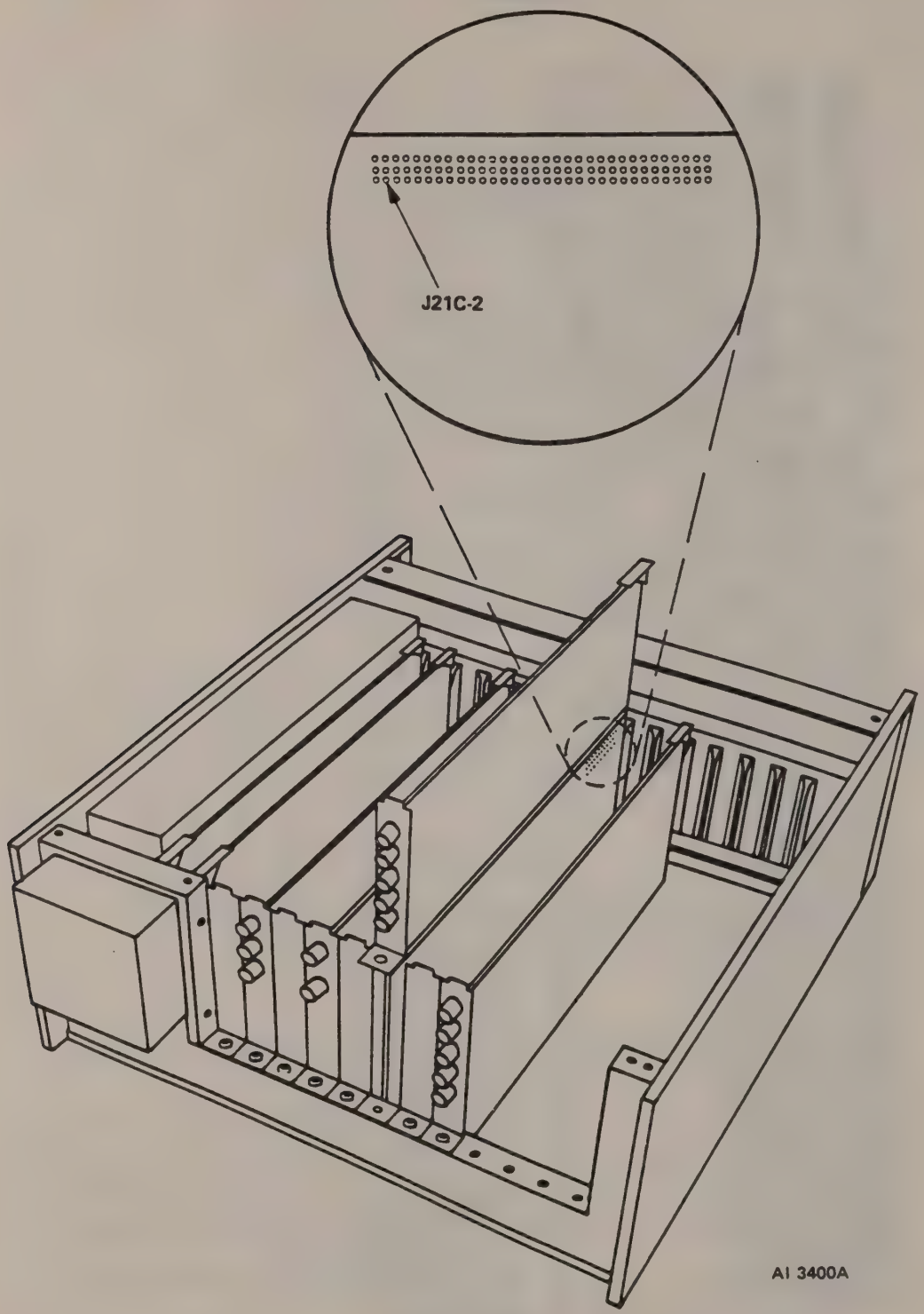

Figure 3.50. DS3 2x2 Card Demux Voltages

5. Type **ADDR 4-TX2<CR> SETUP<CR>**. What you want to see is Figure 3.51 with the CLOCK entry INTERNAL. Change CLOCK entry, if you need to, by typing **CLOCK INTERNAL<CR>**. The screen won't change until you type **SETUP<CR>**.

6. Type **PATTERN 1010<CR>**. These entries will produce data pattern A, see Figure 3.52.

7. Type **ADDR 11-RX2<CR>**.

Step One: Type **STATUS<CR>**. In the upper right of the STATUS screen the ALARMS entry will be LOS, OOF or LOP.

NOTE

The STATUS screen shows a hierarchy of failures; LOS, OOF then LOP, e.g., Loss Of Signal, Out Of Frame and then Loss Of Pattern. Or, to put it a different way, you can't solve an LOP problem until you have framing, and you can't solve a framing problem until you have a signal.

ALARMS entry shows LOS.

1. Use oscilloscope to check output pin 11 of U17 for data pattern A.

No data pattern A at output pin 11 of U17. Check input pin 23 of U17 for data pattern A.

IMPORTANT NOTE

WHEN YOU MUST REPLACE U17... Four times in this procedure, you may need to replace U17. Should this happen, you must calibrate the DS3 circuit, before you go to the next step. This calibration procedures is **Step Five,** and is only done **WHEN YOU REPLACE U17.**

Data pattern A at input pin 23 of U17. Replace U17.

Data pattern A not at input pin 23 of U17. Check input to relay K2, pin 10 for data pattern A.

Data pattern A at pin 10 of relay K2. Type **LEVEL DSX-LOW<CR>**. This puts data pattern A at pin 3 of relay K2. Check pin 3 of relay K2 for signal.

No signal at pin 3 of K2. Check base of Q5 for data pattern A.

REMOTE>addr 4-TX2

REMOTE (4-TX2)>setup

Channel	:	DS3 4-TX2
Tx Output	:	ON
Level	:	DSX
Frame	:	M13
Pattern	:	PRBS-15
Clock	:	INTERNAL
Tx-Busy	:	OFF
Xbit	:	1

Errors : Pattern: BIT Frame: FBIT Coding: BPV

00456-01

Figure 3.51. DS3 2x2 Setup Screen

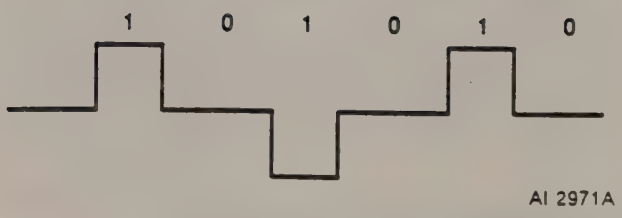

Figure 3.52. Data Pattern A, 1010

No data pattern A at base of Q5. Replace Q5. Type **LEVEL HIGH<CR>**. Check pin 3 of relay K2 for signal.

No signal at pin 3 of K2. Replace K2.

Data pattern A is at output pin 11 of U17. With oscilloscope, check output of U17 at pin 30 for TTL clock pulse at 44.736 MHz.

There are three possibilities: There is no TTL signal at pin 30 of U17, there is a TTL signal at the correct frequency or there is a TTL signal there, but the frequency is wrong.

IMPORTANT NOTE

WHEN YOU MUST REPLACE U17... Four times in this procedure, you may need to replace U17. Should this happen, you must calibrate the DS3 circuit, before you go to the next step. This calibration procedure is **Step Five,** and is only done **WHEN YOU REPLACE U17.**

No TTL pulse at pin 30 of U17. Replace U17.

TTL pulse at 44.736 MHz is at pin 30 of U17. Check for dc voltage at pin 28 of U17. Should be +5 volts.

-5 volts at pin 28 of U17. Replace U17.

+5 volts dc at pin 28 of U17. Check U14, pin 12 for a logic zero (< +0.4 volts).

Pin 12 of U14 has voltage. Replace U6. Check output of U14 at pin 58 for a 50-millisecond square pulse.

Square pulse at pin 58 of U14. Replace U14.

No square pulse at pin 58 of U14. Check input of buffer U22, pin 9.

Square pulse at pin 9 of U22. Replace U22.

No square pulse at pin 9 of U22. Run Diagnostic Test, Section 3.3.18.

TTL pulse at pin 30 of U17 but not at 44.736 MHz. Set up DS3 Clock Recovery.

(1) Connect frequency counter to TP2. Jumper pins 1 and 2 of J10 and adjust R85 for a frequency reading of 45.x MHz.

(2) Short pin 6 of U17 to -5.2 volts(pin 8). Frequency is 38 MHz.

Frequency is greater than 38 MHz. Replace U17.

Frequency is 38 MHz or less. Go to next step in this procedure.

(3) Remove jumper between pins 6 and 8. Adjust R85 for a frequency of 47 MHz.

(4) Jumper pins 1 and 2 of J10. Connect external all 1s DS3 signal to RX1. Frequency should be 44.736 MHz (clock is locked to 44.736 MHz).

Frequency is 44.736 MHz. Adjust R85 until voltage at pin 3 of U17 is 0 volts ± 0.25 volts. Spray Freeze-mist on U17 (frequency may drift from 44.736 MHz). Warm U8 to 40°C. You should not lose signal or have any errors.

Frequency is not 44.736 MHz (clock does not lock to 44.736 MHz). Check U5, pin 12 for a Check U14, pin 12 for a logic high.

Pin 12 of U14 is not at a logic high. Check U6, pin 7 for +5 volts.

Pin 7 of U6 is not +5 volts. Check U6, pin 5 to be more negative than U6, pin 6.

Pin 5 of U6 is more negative than pin 6 of U6. Replace U17.

Pin 12 of U14 is at a logic high. Set oscilloscope on 100-millivolt scale, and check signal at pin 6 of U17 for a triangular pulse going above and below zero.

Triangular pulse at pin 6 of U17. Replace U17.

No triangular pulse at pin 6 of U17. Check U16, pin 1 for triangular pulse.

No triangular pulse at pin 1 of U16. Check U26, pin 8 for 100-millisecond square pulse.

Square pulse at pin 8 of U26. Replace U16.

Square pulse not at pin 8 of U26. Check pin 9 of U26 for square wave.

Pin 9 of U26 has square wave. Replace U26.

Pin 9 of U26 does not have square wave. Replace U24.

Triangular pulse at pin 1 of U16. Replace Q1.

2. Let's review. U17 is good, and so are the components associated with it. This should take care of the LOS problem.

Step Two: Type **ADDR 11-RX2<CR> STATUS<CR>.**

STATUS screen ALARMS entry shows OOF or LOP. Check to see if framing is on. Here's how you do that.

1. Type **ADDR 4-TX2<CR> FRAME CPAR<CR>.**
2. Type **ADDR 11-RX2<CR> STATUS<CR>.**

ALARMS entry still shows OOF or LOP. Check that U14 is decoding properly.

Type **ADDR 4-TX2<CR> PATTERN 1111<CR>.**

Type **ADDR 11-RX2<CR> STATUS<CR>.**

ALARMS entry shows OOF or LOP. With oscilloscope, check pin 55 of U14 for an all 1s data pulse with an occasional (zero) framing bit. The data looks like Figure 3.53.

Data pulse with framing bits is at pin 55 of U14. Replace U13 and type **STATUS<CR>.**

No data pulse with framing bits at pin 55 of U14. Replace U14 and type **STATUS<CR>.**

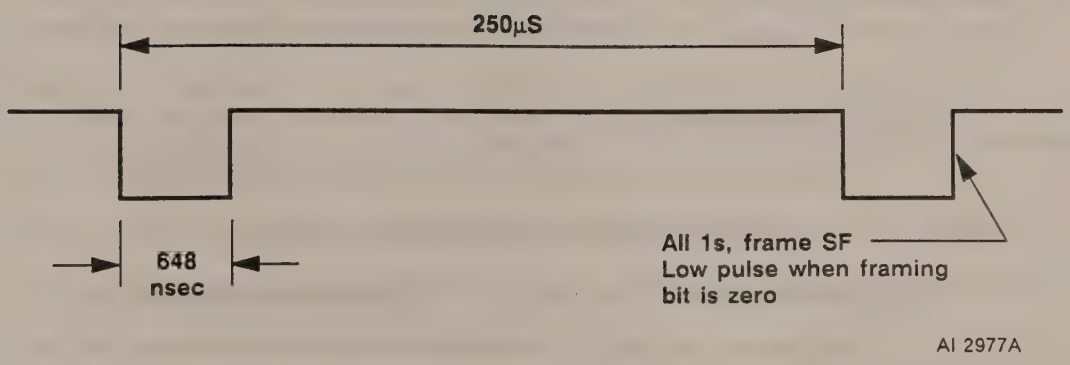

Figure 3.53. All Ones Data with Framing Bits

ALARMS entry shows CLEAR. Go to **Step Four:** Check Frequency.

ALARMS entry shows LOP. Replace U12 and type **STATUS<CR>**.

ALARMS entry shows CLEAR. Go to **Step Four:** Check Frequency.

ALARMS entry still shows LOP. Replace U13.

Step Three: Check BLUE pattern.

Type **ADDR 4-TX2<CR>** then type **PATTERN BLUE<CR>**. Then type **ADDR 11-RX2<CR> STATUS<CR>**.

ALARMS entry shows CLEAR. Go to **Step Four:** Check Frequency.

ALARMS entry shows BLUE. Take 2x2 card off card extender, plug into mothercard, reassemble analyzer and repeat procedures of Section 3.2, making sure you check all transmitters with all receivers.

Step Four: Check Frequency.

Type **ADDR 11-RX2<CR> STATUS<CR>**. Frequency entry shows, for example, "Freq.(44.73642) +9ppm", which means the DS3 frequency is 44.73642 MHz.

The screen shows "Freq.(44.736...)...". DS3 output frequency is good. Remove card extender, plug demux card back into mothercard, replace card retainers and replace analyzer top. Turn on analyzer and repeat front-panel test, Section 3.2.

The screen shows "Freq.(n/a)". With oscilloscope, check signal at pin 11 of U1 for a TTL clock pulse at 6.176 MHz.

No TTL clock pulse at pin 11 of U9. Check pin 7 of connector J21B for clock pulse.

TTL clock pulse not at pin 7 of J21B. Check Mothercard, Section 3.3.19.

TTL Clock pulse at pin 7 of J21B. Replace U24.

Clock pulse at pin 11 of U9. Check pin 13 of U9 for 50-millisecond latch signal.

Latch signal at pin 13 of U9. Replace U9 and type **STATUS<CR>**.

The screen shows "Freq.(44.736...)...". DS3 output frequency is good. Remove card extender, plug demux card back into mother card, replace card retainers and replace analyzer top. Turn on analyzer and repeat front-panel test, Section 3.2.

The screen shows "Freq.(n/a)". Check for 50-millisecond latch signal at pin 13 of U9.

No latch signal at pin 13 of U9. Run Diagnostic Test, Section 3.3.18.

Step Five: Calibrating the DS3 Circuit.

1. Connect frequency counter to TP2 and jumper pins 1 and 2 of J10. Adjust R85 for a frequency of 45.x MHz.

2. Short pin 6 of U17 to -5.2 volts (pin 8); frequency should be between 38 MHz.

   Frequency greater than 38 MHz. Replace U17 and start procedure over.

   Frequency 38 MHz or less. Go to step 3 of this procedure.

3. Remove the short between pins 6 and 8 of U17 and adjust R85 for a frequency of 47 MHz.

4. Jumper pins 1 and 2 of J3.

5. Connect external all 1s DS3 signal to DS3-RX connector. Frequency is 44.736 MHz (signals are phase locked).

6. Adjust R85 until voltage at pin 3 of U17 is 0 volts ± 0.25 volts.

7. Spray U17 with Freeze-mist (frequency may drift from 44.736 MHz). Heat U17 to 40° C. There should be no signal loss or errors.

8. Type **LEVEL 4-TX1 HIGH**. Connect the full length of DTA/DAS long test cable (Scientific-Atlanta part number 306159) from DS3 TX1 to DS3 RX1.

9. Type **LEVEL 11-RX1 DSX-LOW.**

10. Connect digital voltmeter to the C6 side of R21 and ground. Remove jumper on J10 and adjust R98 for a voltage between 100 and 105 millivolts.

11. Jumper pins 2 and 3 on J10. Frequency is 44.736 MHz and voltage is less than -225 millivolts.

12. Replace long cable with a short one. Type **LEVEL 4-TX1 LOW**. Frequency stays at 44.736 and voltage stays below -225 millivolts.

13. Type **PATTERN 4-TX2 BLUE.** Frequency stays at 44.736 and voltage stays below -225 millivolts.

    Voltage is above -225 millivolts. Adjust R42 until voltage is between -225 millivolts and -255 millivolts.

14. Remove jumper from J10. Voltage is more than +50 millivolts.

    Voltage is between +30 millivolts and +50 millivolts. Adjust R98 until voltage is more than +50 millivolts.

15. Jumper pins 2 and 3 on J10. Voltage is less than -225 millivolts.

16. Type **FRAME 4-TX1 M13<CR> PATTERN PRBS-15<CR> LEVEL DSX.** On the receiver, remove R84 and connect the test circuit to the ASIC like this:

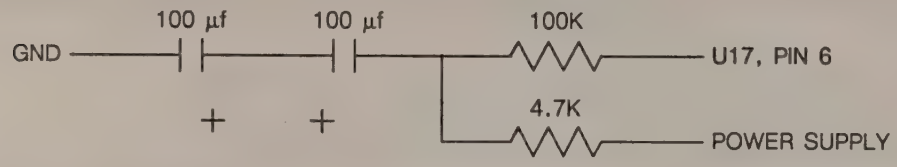

Make sure the lead from pin 6 of U17 to the resistors is less than 6 inches.

17. Type **REP 11-RX1 REM REF 00:00:01 RUN <CR>.** Connect 10 volts dc power supply to the test circuit and set to zero volts.

NOTE

In the next two steps, watch BOTH error seconds and total bit errors. When the error rate is high, error seconds may change but total bit errors may not.

When you can't get a zero error rate at a positive voltage (step 18), adjust the voltage to the smallest negative voltage that just begins to produce errors.

When you can't get a zero error rate at a negative voltage (step 19), adjust the voltage to the smallest positive voltage that just begins to produce errors.

18. Adjust voltage toward +10 volts until receiver begins to make errors, and then adjust voltage toward zero until errors stop. Write down this voltage, including its sign. **You'll need it later. This is V1.**

19. Set test voltage back to zero, then adjust it toward -10 volts until receiver begins to make errors, then adjust voltage toward zero until errors stop. Write down this voltage, including its sign. **This is V2.** Type **STOP <CR>** to stop the test.

20. Calculate V3 = V1 + V2.

    V3 is between +0.5 volts and -0.5 volts. Calibration is correct. Go to step 21.

    V3 is more than +0.5 or less than -0.5 volts. Go to step 18. in this procedure.

21. Choose offset correction resistor from Resistor Table that corresponds to the value of V3 calculated in step 20. Connect it between -5.2 volts (U17, pin 8 and U17, pin 6).

RESISTOR TABLE
(R in Kilohms, V3 in volts)

	V3			V3			V3	
R	max	min	R	max	min	R	max	min
2210	0.58	0.50	487	2.16	2.11	226	4.65	4.54
1500	0.77	0.58	475	2.22	2.16	221	4.77	4.65
1240	0.86	0.77	464	2.30	2.22	215	4.77	4.77
1180	0.91	0.86	442	2.41	2.30	205	5.14	4.96
1100	0.99	0.91	422	2.53	2.41	200	5.25	5.14
1000	1.07	0.99	402	2.62	2.53	196	5.43	5.25
953	1.12	1.07	392	2.68	2.62	187	5.64	5.43
909	1.17	1.12	383	2.78	2.68	182	5.78	5.64
866	1.23	1.17	365	2.92	2.78	178	6.00	5.78
825	1.29	1.23	348	3.06	2.92	169	6.29	6.00
787	1.35	1.29	332	3.21	3.06	162	6.59	6.29
750	1.42	1.35	316	3.37	3.21	154	6.84	6.59
715	1.49	1.42	301	3.50	3.37	150	7.00	6.84
681	1.56	1.49	294	3.58	3.50	147	7.25	7.00
649	1.64	1.56	287	3.71	3.58	140	7.62	7.25
619	1.72	1.64	274	3.89	3.71	133	8.00	7.62
590	1.81	1.72	261	4.03	3.89	127	8.39	8.00
562	1.87	1.81	255	4.13	4.03	121	8.82	8.39
549	1.92	1.87	249	4.23	4.13	115	9.12	8.82
536	1.99	1.92	243	4.33	4.23	113	9.33	9.12
511	2.06	1.99	237	4.44	4.33	110	9.68	9.33
499	2.11	2.06	232	4.54	4.44	105	10.15	9.68

22. Repeat steps 18, 19, and 20.

    V3 is between -0.5 volts and +0.5 volts. Install correction resistor as R84 and go to step 23.

    V3 is less than -0.5 volts or more than +0.5 volts. Take the correction resistor off and repeat procedure, starting with step 18.

23. Type **REP REM REF 00:01:00 RUN <CR>** and verify there are no errors. Type **STOP <CR>** to stop the test.

24. Type **LEVEL DSX-LOW.** Then type **LEVEL 4-TX1 DSX.** Connect DS3 TX1 to DS TX, using standard test cable. Type **REP 11-RX1 REM REF 00:01:00 RUN <CR>** and verify no errors. Type **STOP <CR>** to stop the test.

25. Type **LEVEL 4-TX1 LOW.** Type **REP 11-RX1 REM REF 00:01:00 RUN <CR>** and verify no errors. Type **STOP <CR>** to stop the test.

26. Disconnect and reconnect test cable and verify that frequency is 44.736 MHz.

27. Type **LEVEL 4-TX1 DSX-MON.** Type **REP 11-RX1 REM REF 00:01:00 RUN <CR>** and verify no errors. Type **STOP <CR>** to stop the test.

28. Type **LEVEL 4-TX1 DSX.** Connect transmitter and receiver through a 26 dB pad. Type **REP 11-RX1 REM REF 00:01:00 RUN <CR>** and verify no errors. Type **STOP <CR>** to stop the test.

This completes the DS3 2x2 receiver, Channel 2 calibration.

3.3.9 DS1 2x2 Card, Channel 1 Transmitter

NOTE

Replacements for some integrated circuits on the DS1 2x2 card are only available from Scientific-Atlanta. They are listed in the Parts List, Chapter 4, but for your convenience, they're listed here also.

Reference Designator	Scientific-Atlanta Part Number
U3	327877
U4	327878
U5	327877
U6	327876
U8	327875
U13	327877
U14	327878
U15	327877
U16	327876
U18	327875
U25	456215
U26	456213
U27	456214
U31	456216
U34, U35	Refer to Scientific-Atlanta for current number
Z1	327944
Z2	327944

Several voltage and oscilloscope readings you'll be making will vary, depending on the data pattern you have selected. Which data pattern you choose isn't critical; however, to keep your readings consistent, once you choose a pattern, don't change it.

Disconnect all rear-panel cables from the DS1 2x2 card to be checked and put it on the Scientific-Atlanta card extender. Have the schematic handy (Chapter 5) and refer to Figure 3.54 to locate card components.

NOTE

This procedure is for a DS1 Channel 1 transmitter on a 2X2 card in slot 4. There is no bipolar signal, or a distorted bipolar signal, at output connector DS1-TX1.

Step One: Check Clock Oscillator U23.

1. Use oscilloscope to check for TTL clock pulse at 6.176 MHz at output of crystal oscillator U23, pins 4 and 8 (square pin is pad 1, number pins counterclockwise).

   Clock pulse at pins 4 and 8 of U23. Oscillator is OK but something else is wrong. Check U3, **Step Two.**

   Clock pulse not at pins 4 or 8 of U23. Check oscillator input pin 14 for +5 volts dc. If you have +5 volts in and nothing out, replace oscillator U23.

2. Check output of replacement U23 for clock pulse.

   Clock pulse is correct. Type **FRAME 4-TX1 OFF<CR>PATTERN 1-7** and check output at DS1-TX1 for a DS1 bipolar signal that meets template specifications, see Figure 3.55.

   Transmitter output signal meets specifications. Good. The oscillator was the problem. Remove card extender, reconnect rear-panel cables, plug card back into analyzer, and replace analyzer top. Turn on the analyzer and repeat procedures in Section 3.2 that apply to that card.

   Transmitter output signal does not meet specifications. You have more than oscillator problems. Go to **Step Two.**

Step Two: Check U3.

1. Make sure clock source is set to INTERNAL and then check input of U3, pin 16 for 1.544 MHz clock pulse.

   Correct clock pulse at pin 16 of U3. All components from the output of oscillator U23 to pin 16 of U3 are good, but the transmitter card output is still bad. Check amplifier Z1, **Step Three.**

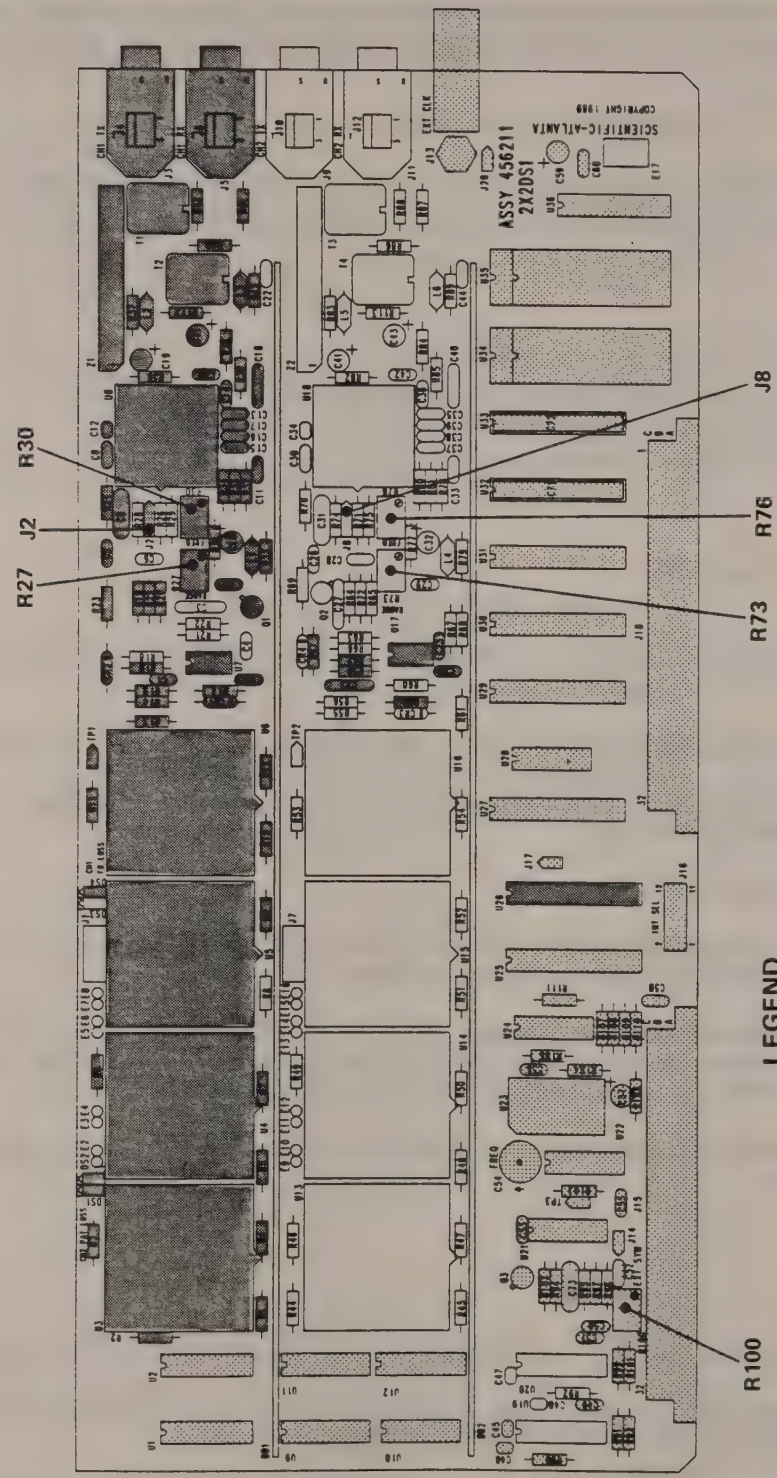

Figure 3.54. DS1 2x2 Card Components

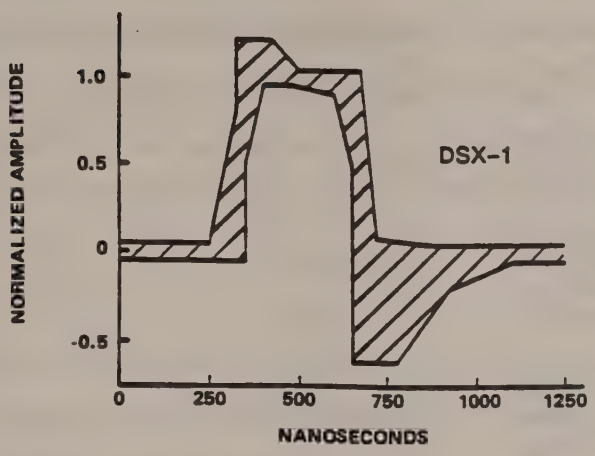

Figure 3.55. DS1 Bipolar Signal

No clock pulse at pin 16 of U3. Check for clock pulse at pin 16 of Channel 1 clock selector U19.

No clock pulse at pin 16 of U19. Check for clock pulse at pin 1 of U22.

Clock pulse at pin 1 of U22. Replace U22. Check output at DS1-TX1 and compare bipolar signal with Figure 3.55.

Output meets specifications. Reassemble analyzer and repeat procedures in Section 3.2 that apply to this card.

Output doesn't meet specifications. Go to Step 2.

Clock pulse at pin 16 of U19, but not at pin 16 of U3. Check DS1 BERTS XMTR SETUP to make sure you are using the internal clock. Here's how you do that.

Check setup parameters by typing **SETUP<CR>**. What you want to see is Figure 3.56 with the CLOCK entry INTERNAL.

Clock pulse still at pin 16 of U19, but not at pin 16 of U3. Replace U19 and check output signal at DX1-TX1.

Output meets specifications. Reassemble analyzer and repeat procedures in Section 3.2 that apply to this card.

Output doesn't meet specifications. Go to Step 2.

```
REMOTE>addr 4-TX1

REMOTE (4-TX1)>setup

                Channel    :  DS1 4-TX1
              Tx Output    :  ON
                   Code    :  AMI
                  Frame    :  SF
                Pattern    :  PRBS-20

         Loopback (esf)    :   OFF
         Loopcode (esf)    :  CSU-LINE
         Loopback (sf)     :  OFF
         Loopcode (sf)     :  CSU-LINE

                Yellow     :  OFF
                  Clock    :  INTERNAL
              Tx-Busy      :  OFF

                Errors     :  Pattern: BIT    Frame: FBIT    Coding: BPV
```

02863

Figure 3.56. DS1 Transmitter Setup Screen

2. Let's review. Oscillator U23 is good, and U22 is good. But your transmitter output is not right, and your input to U3 is not right and you've just replaced U19.

3. Check output from U19, pin 3.

   No output from U19. Check the two selector lines on the input of U19, pins 1 and 2. Voltage on both pins must be at logic zero (< +0.4 volt) for U19 to produce an output.

   Logic high (> +0.4 volt) on pins 1 or 2 of U19. Check DS1 BERTS XMTR SETUP to make sure you are using the internal clock. Here's how you do that.

   Type **ADDR 4-TX1<CR>**. Then check setup parameters by typing **SETUP<CR>**. What you want to see is Figure 3.56 with the CLOCK entry INTERNAL.

   To change the CLOCK setting, if it needs changing, type **CLOCK INTERNAL<CR>**. The screen won't change, but to check the new setting, type **SETUP<CR>**.

   INTERNAL clock is selected and there is still a high logic level on either pins 1 or 2 of U19. Check U6,pins 29 and 32 for logic high.

   U6, pins 29 and 32 have logic highs. Replace U6.

   INTERNAL CLOCK is selected and there is a logic zero on pins 1 and 2 of U19. Check output at DS1-TX1 for bipolar signal that matches Figure 3.55.

Output signal meets specifications. Reassemble analyzer and repeat procedures in Section 3.2 that apply to this card.

Output signal does not meet specifications. Check for clock pulse at pin 16 of U3.

Clock pulse at pin 16 of U3. Check amplifier Z1, **Step Three**.

Now, you have checked the circuit up to the input of U3 and everything is in order. However, the output still does not meet template specifications. The next step is to check amplifier Z1.

Step Three: Check Amplifier Z1.

1. Check input of amplifier Z1; both pins 5 and 13 should have +5 volts data pulses, 324 nanoseconds wide.

No data pulses at either pin 5 or 13. On U6, check pin 25 for +5 volts clock pulse at 1.544 MHz.

No clock pulse at pin 25 of U6. Replace U3.

Clock pulse at pin 25 of U6. On U6, check pin 24 for your selected data pattern.

No data pattern on U6 pin 24. Replace U6. Check input to Z1, pins 5 and 13.

Correct input on both pins 5 and 13. Check output at DS1-TX1 against template, see Figure 3.55.

Output signal meets template specifications. Reassemble analyzer and repeat procedures in Section 3.2 that apply to this card.

Output signal does not meet template specifications. Check output of Z1, pins 8 and 10, for data pulses. Should be the same as signal on pin 24 of U6, selected data pattern.

Z1 output not correct. Replace Z1.

Z1 output correct. Replace transformer T1. Check output at DS1-TX1 for bipolar signal, see Figure 3.55.

Output signal meets specifications. Reassemble analyzer and repeat procedures in Section 3.2 that apply to this card.

Output signal does not meet specifications. You have eliminated all the components of the transmitter card as sources of trouble except the three chips, U6, U3, U4. They are interconnected and must be tested together, see **Step Four**.

Step Four: Check U6, U3 and U4.

You have checked everything from the input of oscillator U23 to the input pin 25 of U6, and everything from the output amplifier Z1 to DS1-TX1. Now, the output of the transmitter card is not correct, but the input to pin 25 of U6 is correct.

Input signal to U6 on pin 25 is correct. Check U6 for your selected data pattern on input pin 24.

Clock pulse on input pin 25 of U6 but no data signal on pin 24. Check U3 output; pin 19 should have clock pulse, pin 20 should have our selected data pattern.

Signal absent on either pins 19 or 20. Replace U3 and recheck input signals on pins 24 and 25 of U6.

Correct signals on pins 24 and 25 of U6. Check transmitter output at DS1-TX1. If output signal meets specifications, reassemble analyzer and repeat procedures in Section 3.2 that apply to this card.

At this stage, you have checked all the components of the DS1 2x2 card, Channel 1 transmitter.

3.3.10 DS1 2x2 Card, Channel 2 Transmitter

NOTE

Replacements for some integrated chips on the DS1 2x2 card are only available from Scientific-Atlanta. They are listed in the Parts List, Chapter 4, but for your convenience, they're listed here also.

Reference Designator	Scientific-Atlanta Part Number
U3	457040
U4	327878
U5	457040
U6	327876
U8	458327
U13	457040
U14	327878
U15	457040
U16	327876
U18	458327
U25	456215
U26	456213
U27	456214
U31	456216
U34, U35	Refer to Scientific-Atlanta for current number
Z1	327944
Z2	327944

Several voltage and oscilloscope readings you'll be making will vary, depending on the data pattern you have selected. Which data pattern you choose isn't critical; however, to keep your readings consistent, once you choose a pattern, don't change it.

Disconnect all rear-panel cables from the DS1 2x2 card to be checked and put it on the Scientific-Atlanta card extender. Have the schematic handy (Chapter 5) and refer to Figure 3.57 to locate card components.

NOTE

This procedure is for a DS1 transmitter on a 2x2 card in slot 4. The problem we're looking for is no bipolar signal, or a distorted bipolar signal, at output connector DS1-TX1.

Step One: Check Clock Oscillator U23.

1. Use oscilloscope to check for TTL clock pulse at 6.176 MHz at output of crystal oscillator U23, pins 4 and 8 (square pin is pad 1, number pins counterclockwise).

   Clock pulse at pins 4 and 8 of U23. Oscillator is OK but something else is wrong. Check U13, **Step Two.**

   Clock pulse not at pins 4 or 8 of U23. Check oscillator input pin 14 for +5 volts dc. If you have +5 volts in and nothing out, replace oscillator U23.

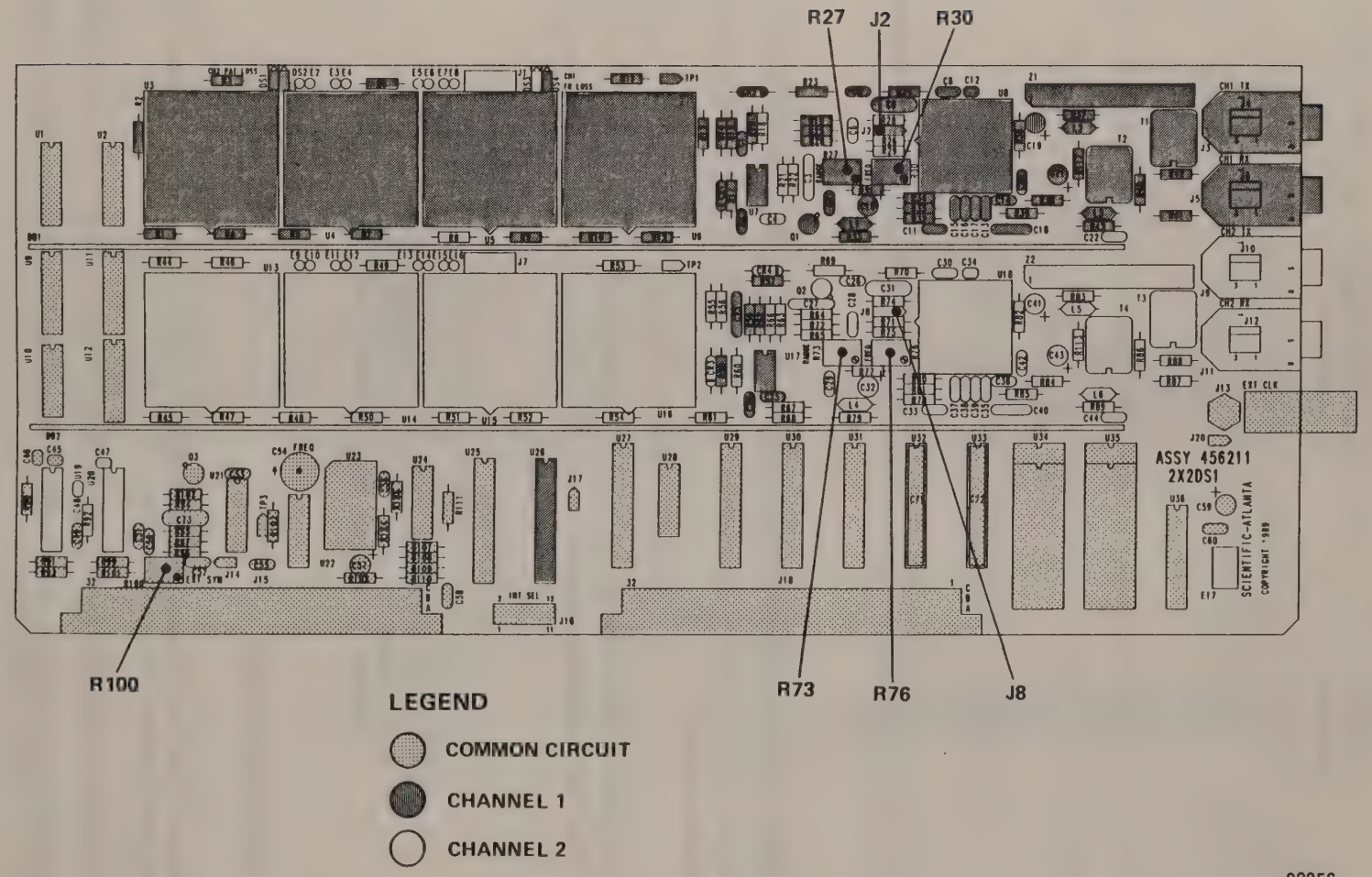

Figure 3.57. DS1 2x2 Card Components

2. Check output of replacement U23 for clock pulse.

Clock pulse is correct. Type **FRAME 4-TX1 OFF<CR>PATTERN 1-7** and check card output at DS1-TX1 for a DS1 bipolar signal that meets template specifications, see Figure 3.58.

Transmitter output signal meets specifications. Good. The oscillator was the problem. Remove card extender, reconnect rear-panel cables, plug card back into analyzer, and replace analyzer top. Turn on the analyzer and repeat procedures in Section 3.2 that apply to that card.

Transmitter output signal does not meet specifications. You have more than oscillator problems. Go to **Step Two.**

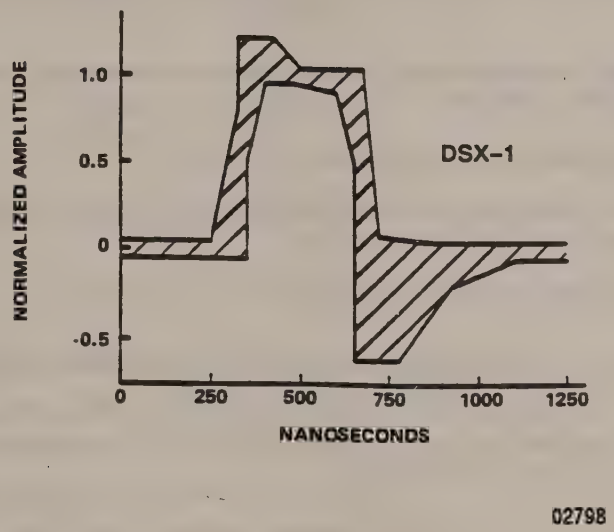

Figure 3.58. DS1 Bipolar Signal

Step Two: Check U3.

1. Check input of U13, pin 16 for 1.544 MHz clock pulse.

Correct clock pulse at pin 16 of U13. All components from the output of oscillator U23 to pin 16 of U13 are good, but the transmitter card output is still bad. Check amplifier Z2, **Step Three.**

No clock pulse at pin 16 of U13. Check for clock pulse at pin 16 of Channel 2 clock selector U20.

No clock pulse at pin 16 of U20. Check for clock pulse at pin 1 of U22.

Clock pulse at pin 1 of U22. Replace U22. Check output at DS1-TX1 and compare bipolar signal with Figure 3.58.

Output meets specifications. Reassemble analyzer and repeat procedures in Section 3.2 that apply to this card.

Output doesn't meet specifications. Go to Step 2.

Clock pulse at pin 16 of U20, but not at pin 16 of U13. Check DS1 BERTS XMTR SETUP to make sure you are using the internal clock. Here's how you do that.

Type **ADDR 4-TX1<CR>**. Then check setup parameters by typing **SETUP<CR>**. What you want to see is Figure 3.59 with the CLOCK entry INTERNAL. To change the clock setting, if it needs changing, type **CLOCK INTERNAL<CR>**. The screen won't change until you type **SETUP<CR>**.

Clock pulse still at pin 16 of U20, but not at pin 16 of U13. Replace U19 and check output signal at DX1-TX1.

Output meets specifications. Reassemble analyzer and repeat procedures in Section 3.2 that apply to this card.

Output doesn't meet specifications. Go to Step 2.

2. Let's review. Oscillator U23 is good, and U22 is good. But your transmitter output is not right, and your input to U13 is not right and you've just replaced U20.

3. Check output from U20, pin 3.

No output from U20. Check the two selector lines on the input of U20, pins 1 and 2. Voltage on both pins must be at logic zero (< +0.4 volt) for U20 to produce an output.

Logic high (> +0.4 volt) on pins 1 or 2 of U20. Check DS1 BERTS XMTR SETUP to make sure you are using the internal clock. Here's how you do that.

Type **ADDR 4-TX1<CR>**. Then check setup parameters by typing **SETUP<CR>**. What you want to see is Figure 3.59 with the CLOCK entry INTERNAL.

To change the CLOCK setting, if it needs changing, type **CLOCK INTERNAL<CR>**. The screen won't change, but to check the new setting, type **SETUP<CR>**.

INTERNAL clock is selected and there is still voltage on either pins 1 or 2 of U20. Check U16, pins 29 and 32 for a logic high.

U16, pins 29 and 32 have logic high. Replace U16.

INTERNAL CLOCK is selected and there is a logic zero on pins 1 and 2 of U20. Check output at DS1-TX1 for bipolar signal that matches Figure 3.58.

Output signal meets specifications. Reassemble analyzer and repeat procedures in Section 3.2 that apply to this card.

Output signal does not meet specifications. Check for clock pulse at pin 16 of U13.

Clock pulse at pin 16 of U13. Check amplifier Z2, **Step Three**.

```
REMOTE>addr 4-TX2

REMOTE (4-TX2)>setup

                Channel    :  DS1 4-TX2
             Tx Output     :  ON
                  Code     :  AMI
                 Frame     :  SF
               Pattern     :  PRBS-20

          Loopback (esf)   :  OFF
          Loopcode (esf)   :  CSU-LINE
          Loopback (sf)    :  OFF
          Loopcode (sf)    :  CSU-LINE

                Yellow     :  OFF
                 Clock     :  INTERNAL
              Tx-Busy      :  OFF

                Errors     :  Pattern: BIT    Frame: FBIT    Coding: BPV
```

02858

Figure 3.59. DS1 Transmitter Setup Screen

Now, you have checked the circuit up to the input of U3 and everything is in order. However, the output still does not meet template specifications. The next step is to check amplifier Z2.

Step Three: Check Amplifier Z2.

1. Check input of amplifier Z2; both pins 5 and 13 should have +5 volts data pulses, 324 nanoseconds wide.

   No data pulses at either pin 5 or 13. On U16, check pin 25 for +5 volts clock pulse at 1.544 MHz.

   No clock pulse at pin 25 of U16. Replace U13.

   Clock pulse at pin 25 of U16. On U16, check pin 24 for your selected data pattern.

   No data pattern on U16 pin 24. Replace U16. Check input to Z2, pins 5 and 13.

   Correct input on both pins 5 and 13. Check output at DS1-TX1 against template, see Figure 3.58.

   Output signal meets template specifications. Reassemble analyzer and repeat procedures in Section 3.2 that apply to this card.

   Output signal does not meet template specifications. Check output of Z2, pins 8 and 10, for data pulses. Should be the same as signal on pin 50 of U6, selected data pattern.

Z2 output not correct. Replace Z2.

Z2 output correct. Replace transformer T1. Check output at DS1-TX1 for bipolar signal, see Figure 3.58.

Output signal meets specifications. Reassemble analyzer and repeat procedures in Section 3.2 that apply to this card.

Output signal does not meet specifications. You have eliminated all the components of the transmitter card as sources of trouble except the three chips, U16, U13, U14. They are interconnected and must be tested together, see **Step Four**.

Step Four: Check U16, U13 and U14.

You have checked everything from the input of oscillator U23 to the input pin 25 of U16, and everything from the output amplifier Z2 to DS1-TX1. Now, the output of the transmitter card is not correct, but the input to pin 25 of U16 is correct.

Input signal to U16 on pin 25 is correct. Check U16 for your selected data pattern on input pin 24.

Clock pulse on input pin 25 of U16 but no data pattern on pin 24. Check U13 output; pin 19 should have clock pulse, pin 20 should have our selected data pattern.

Signal absent on either pins 19 or 20. Replace U13 and recheck input signals on pins 24 and 25 of U16.

Correct signals on pins 24 and 25 of U16. Check transmitter output at DS1-TX1. If output signal meets specifications, reassemble analyzer and repeat procedures in Section 3.2 that apply to this card.

At this stage, you have checked all the components of the DS1 2x2 card, Channel 2 transmitter.

3.3.11 DS1 2x2 Receiver, Channel 1

NOTE

Replacements for some integrated circuits on the DS1 2x2 card are only available from Scientific-Atlanta. They are listed in the Parts List, Chapter 4, but, for your convenience, they're listed here too.

Reference Designator	Scientific-Atlanta Part Number
U3	457040
U4	327878
U5	457040
U6	327876
U8	458327
U1	457040
U1	327878
U1	457040
U1	327876
U1	458327
U25	456215
U26	456213
U27	456214
U31	456216
U34, U35	Refer to Scientific-Atlanta for current number
Z1	327944
Z2	327944

The DS1 2x2 card has two diagnostic LEDs for each channel on the top edge. Here's what these LEDs indicate for Channel 1 receiver.

	Definition	Abbreviation	Reference Designator	STATUS Screen ALARMS Entry
DS1	Loss of Pattern	1PL	DS2	LOP
DS1	Out of Frame	1FL	DS4	OOF

The LEDs give hardware status. The CRT screen gives software status. Occasionally, it is convenient to compare readings to help isolate problems.

IMPORTANT NOTE

WHEN YOU MUST REPLACE U8... Several times in this procedures you may need to replace U8. When you do, before you go to the next step, calibrate the DS1 circuit using **Step Six, BUT ONLY WHEN YOU REPLACE U8.**

NOTE

This procedure is for a DS1 Channel 1 demux on a 2x2 card in slot 11 and with a good DS1 transmitter card in slot 4. See Section 3.3.3.

In this procedure you will be asked to check for data pattern A. Here's how you get data pattern A.

1. Connect DS1-TX1 in slot 4 to DS1-RX1 in slot 11.

2. Type **ADDR 4-TX1<CR>**. Then type **SETUP<CR>**. What you want to see is Figure 3.60 with the CLOCK entry INTERNAL. Change CLOCK entry, if you need to, by typing **CLOCK INTERNAL<CR>**. The screen won't change until you type **SETUP<CR>**.

```
REMOTE>addr 4-TX1

REMOTE (4-TX1)>setup

                Channel    :  DS1 4-TX1
              Tx Output    :  ON
                   Code    :  AMI
                  Frame    :  SF
                Pattern    :  PRBS-20

          Loopback (esf)   :   OFF
          Loopcode (esf)   :   CSU-LINE
          Loopback (sf)    :   OFF
          Loopcode (sf)    :   CSU-LINE

                 Yellow    :  OFF
                  Clock    :  INTERNAL
               Tx-Busy     :  OFF

                 Errors    :  Pattern: BIT    Frame: FBIT    Coding: BPV
```

02863

Figure 3.60. DS1 Transmitter Setup Screen

3. Type **PATTERN PROG 1010<CR>**. These entries will produce data pattern A, see Figure 3.61.

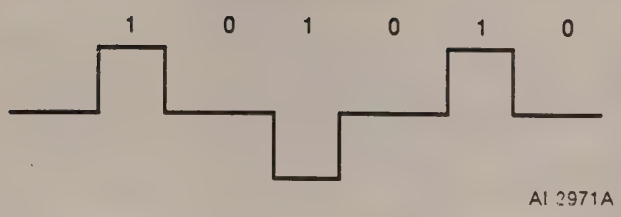

Figure 3.61. Data Pattern A, 1010

4. Put the DS1 2x2 card on the Scientific-Atlanta card extender.

5. Have the DS1 2x2 card schematic handy and refer to Figure 3.62 to locate components.

Step One: Type **ADDR 11-RX1<CR> STATUS<CR>.**

NOTE

The STATUS screen shows a hierarchy of failures; LOS, OOF then LOP, e.g., Loss Of Signal, Out Of Frame and then Loss Of Pattern. Or, to put it another way, you can't solve an LOP problem until you have framing, and you can't solve a framing problem until you have a signal.

Let's take the case where your indication is Loss Of Signal.

ALARMS entry shows LOS. LOS (Loss Of Signal) indicates potential trouble in two areas: Either the clock recovery signal is not phase-locked with the input signal, or there is no input signal at all.

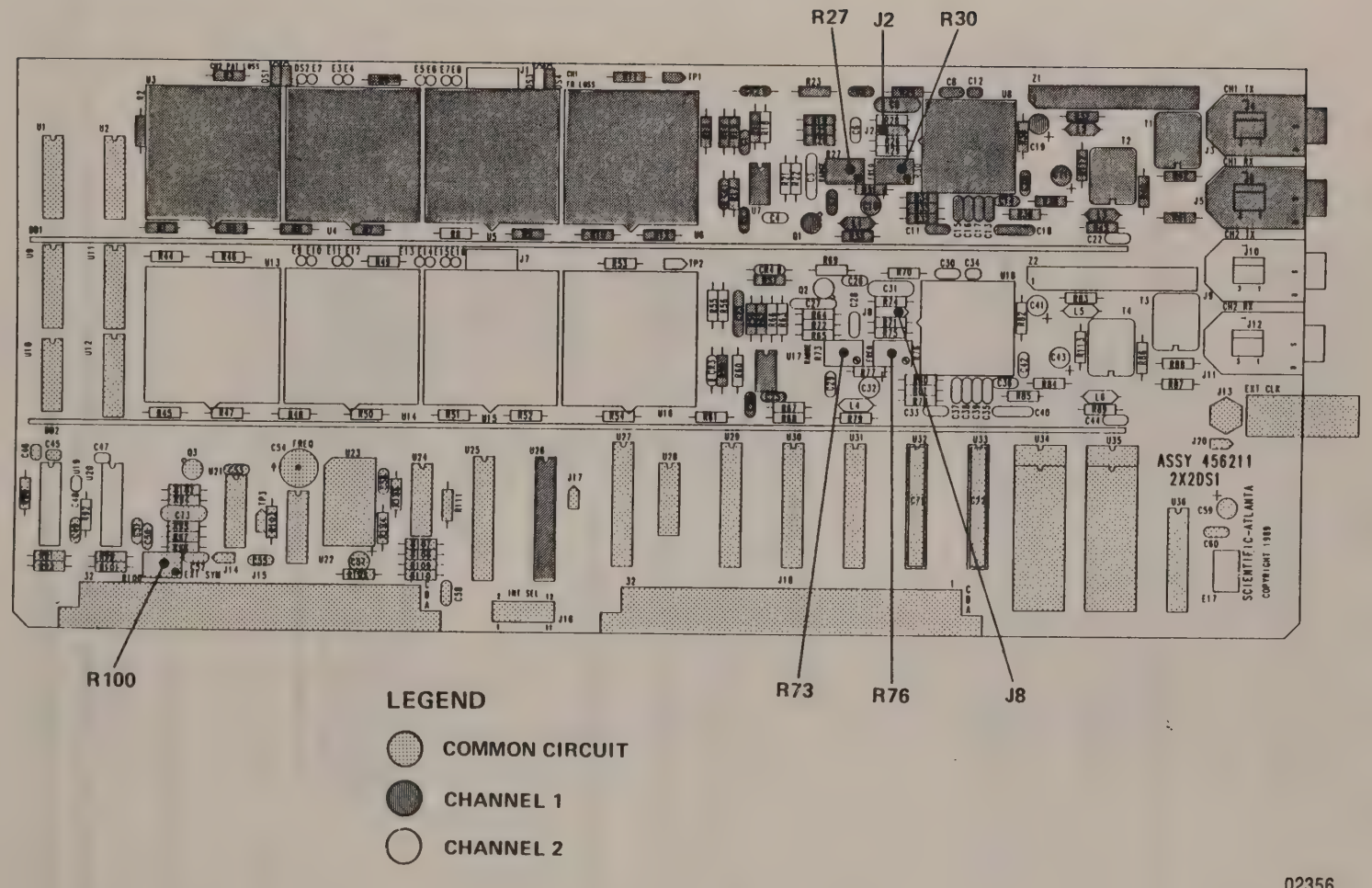

Figure 3.62. DS1 2x2 Card Components

Use oscilloscope to check for data pattern A at pin 11 of U8.

No data pattern A at output pin 11 of U8. Check input pin 23 of U8 for data pattern A.

IMPORTANT NOTE

WHEN YOU MUST REPLACE U8... Several times in this procedure you may need to replace U8. When you do, before you go to the next step, calibrate the DS1 circuit **Step Six. ONLY IF YOU REPLACE U8.**

Data pattern A at input pin 23 of U8. Replace U8.

No data pattern A at pin 23 of U8. Check cable at connection J6 and input. Check input to transformer T2, pin 3, for data pattern A.

Data pattern A is at pin 3 of transformer T2. Replace T2.

NOTE

A TTL clock pulse is logic zero when the voltage is 0 to +0.8 volts. It is a logic one when the voltage is +2.4 to 5.2 volts.

Data pattern A is at output pin 11 of U8. With oscilloscope check for TTL clock pulse, 1.544 MHz, at U8, pin 30.

There are three possibilities; the TTL clock pulse is not there, the TTL clock pulse is there at 1.544 MHz, or the TTL clock pulse is there but not at 1.544 MHz.

IMPORTANT NOTE

WHEN YOU MUST REPLACE U8... Several times in this procedure you may need to replace U8. When you do, before you go to the next step, calibrate the DS1 circuit, **Step Six. ONLY IF YOU REPLACE U8.**

No TTL clock pulse at pin 30 of U8. Replace U8. Recheck for TTL clock pulse at pin 30 of U8.

Still no TTL clock pulse at pin 30 of U8. Check pin 5 of U8 for +5 volts ± 5%.

No voltage at pin 5 of U8. Check R33 and L1 for short or open circuits.

TTL clock pulse at 1.544 MHz is at pin 30 of U8. Check pin 28 of U8 for +5 volts dc.

-5 volts dc at pin 28 of U8. Replace U8.

+5 volts dc at pin 28 of U8. Check U6, pin 20 for a logic high (> +2.4 volts).

Pin 20 of U6 has logic high. Verify phase lock by checking pin 12 of U6 for logic low (< +0.8 volts).

Pin 12 of U6 has logic low. Replace U6.

TTL clock pulse is at pin 30 of U8 but not at 1.544 MHz. On pin 12 of U6, check for logic low.

Pin 12 of U6 has logic low. Replace U6 and then adjust phase lock. Here's how you do that.

(1) Connect frequency counter to TP1.

CAUTION

Skipping step (2) may damage the card.

(2) With no signal applied, remove jumper from J2 and put it on J21.

(3) Adjust R30 for a frequency of 1.54x MHz.

(4) Move jumper from J21 to J22 and adjust R27 for a frequency of 1.44x MHz.

(5) Repeat steps (2), (3) and (4) until you get the correct frequencies.

CAUTION

Skipping step (6) may damage the card.

(6) Remove jumpers from J21 and J22 and jumper pins 2 and 3 of J2. Spray U8 with Freeze-mist (frequency may drift) and then warm U8 to 40° C. You should have no signal loss or errors.

Step Two: Type **STATUS<CR>.**

ALARMS entry shows OOF.

Check to see if framing is on. Here's how you do that.

Type **ADDR 4-TX1<CR> SETUP<CR> FRAME CPAR<CR> ADDR 11-RX1<CR> STATUS<CR>.**

ALARMS entry still shows OOF. There are two possibilities.

The first possibility is that U6 is not decoding properly. Check that first.

Type **ADDR 4-TX1<CR>SETUP<CR>PATTERN 1111<CR>ADDR 11-RX1<CR> STATUS<CR>.**

ALARMS entry shows OOF. With oscilloscope, check pin 55 of U6 for an all 1s pulse with an occasional (zero) framing bit. It looks like Figure 3.63.

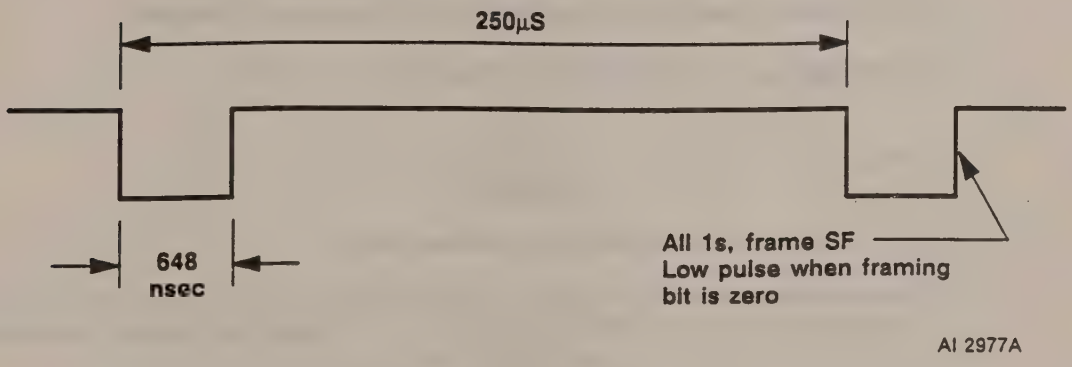

Figure 3.63. All Ones Data with Framing Bits

Data with framing bit is at pin 55 of U6. Replace U5.

No data at pin 55 of U6. Replace U6. Type **STATUS<CR>.**

ALARMS entry shows CLEAR. Go to **Step Five:** Check Frequency.

ALARMS entry still shows OOF. This is all you can do to check if framing is on.

The second possibility is that you don't have phase lock. Here's how you check that.

Check pin 30 of U8 for TTL clock pulse at 1.544 MHz.

TTL clock pulse is at pin 30 of U8, but not at 1.544 MHz. Adjust phase lock.

(1) Connect frequency counter to TP1.

CAUTION

Skipping step (2) may damage the card.

(2) With no signal applied, remove jumper from J2 and jumper J21.

(3) Adjust R30 for a frequency of 1.54x MHz.

(4) Move jumper from J21 to J22 and adjust R27 for a frequency of 1.44x MHz.

(5) Repeat steps (2), (3) and (4) until you get the correct frequencies.

CAUTION

Skipping step (6) may damage the card.

(6) Remove jumpers from J21 and J22 and jumper pins 2 and 3 of J2. Spray U8 with Freeze-mist (frequency may drift) and then warm U8 to 40°C. You should have no signal loss or errors.

Step Three: Type **STATUS<CR>**.

ALARMS entry shows LOP. Replace U4. Type **STATUS<CR>**.

ALARMS entry shows CLEAR. Go to **Step Five:** Check Frequency.

ALARMS entry shows LOP. Replace U5.

Step Four: Type **STATUS<CR>**.

ALARMS entry shows AIS.

1. Type **ADDR 4-TX1<CR>**. Then type **SETUP<CR>**. What you want to see is Figure 3.60 with the CLOCK entry INTERNAL. Change CLOCK entry, if you need to, by typing **CLOCK INTERNAL<CR>**. The screen won't change until you type **SETUP<CR>**.

2. Type **PATTERN 1111<CR>**. These entries will produce data pattern A, see Figure 3.64. Use oscilloscope to check pin 11 of U8 for data pattern A.

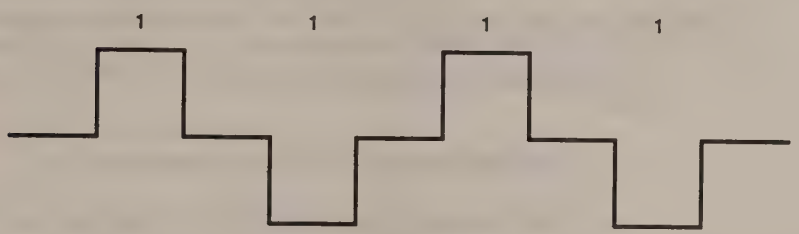

02799

Figure 3.64. Data Pattern A, 1111

3. Type **ADDR 11-RX1<CR> STATUS<CR>**.

   ALARMS entry shows CLEAR. Put 2x2 card back in analyzer, reassemble analyzer, and repeat Section 3.2, making sure to check all transmitters against all receivers.

Step Five: Check Frequency.

Type **ADDR 11-RX1<CR> STATUS<CR>**. The status screen should show, for example, "___Freq.(1.544002) +1ppm", which means the DS1 output frequency is 1.544002 MHz.

DS1 input signal frequency is 1.544 MHz. Remove card extender, plug 2x2 card back into mothercard, and reassemble analyzer. Turn on the analyzer and repeat procedures in Section 3.2, making sure you check all transmitters against all receivers.

No DS1 frequency measurement, screen shows "Freq.(n/a)". With oscilloscope check signal on pin 11 of U1 and U2 for a square wave.

No square wave at pin 11 of U2. Check pin 7 of connector J18B.

Square wave is at pin 7 of J18B. Replace U26.

Square wave is not at pin 7 of J18B. Check mothercard, Section 3.3.19.

Square wave is at pin 11 of U1 and U2. Check pin 13 of U1 and U2 for clock pulses, 162 nanoseconds wide, 50 milliseconds apart.

Clock pulse is at pin 13 of U2. Replace U2 and, if necessary, U1.

No clock pulse at pin 13 of U2. Replace U26 and, if necessary, U6.

Still no clock pulse at pin 13 of U2. Check for 50-millisecond latch signal at pin 58 of U6.

No clock pulse at pin 58 of U6. Check pin 27 of J18B for 50-millisecond latch signal.

Clock pulse at pin 27 of J18B. Replace buffer U24.

No clock pulse at pin 27 of J18B. Run diagnostic test, Section 3.3.18.

Step Six: How To Calibrate DS1 Receiver

1. Connect frequency counter to TP1.

CAUTION

Skipping step (2) may damage the card.

2. With no signal applied, remove jumper from J2 and jumper J21.
3. Adjust R30 for a frequency of 1.54x MHz.
4. Move jumper from J21 to J22 and adjust R27 for a frequency of 1.44x MHz.
5. Repeat steps (2), (3) and (4) until you get the correct frequencies.

CAUTION

Skipping step (6) may damage the card.

6. Remove jumpers from J21 and J22 and jumper pins 2 and 3 of J2. Spray U8 with Freeze-mist (frequency may drift) and then warm U8 to 40 °C. Check errors by typing **REP 11-RX1 REM REF 00:00:01.** Verify no LOS or errors.

7. Remove signal cable, and then reconnect. Frequency is 1.54 MHz.

8. Set DS1 transmitter by typing **FRAME 4-TX1 SF <CR>CODE AMI<CR> PATTERN 3IN24<CR>.** Frequency stays at 1.54 MHz.

9. Disconnect and reconnect signal cable ten times and verify lockup (frequency stays the same.)

10. Change DS1 transmitter by typing **PATTERN 1-7<CR>.** Disconnect and reconnect signal cable several times and verify lockup (frequency stays the same).

11. Change transmitter by typing **CODE B8ZS<CR>FRAME PRBS-23<CR>.** Type **REP 11-RX1 REM REF 00:01:00** and verify the lockup (frequency stays the same).

12. Replace signal cable with 27 dB cable and run one-minute test and verify no errors.

Step Seven: How to Check Signaling Bits

NOTE

When the signaling bit pattern is incorrect, replace U15.

1. Connect DS1 transmitter output to DS1 transmitter input. Set the DS1 transmitter like this: Type **FRAME 4-TX1 SF<CR>CODE B8ZS<CR>PATTERN PRBS 20<CR>.**

2. Use the receiver card address and type **SIGNALING 11-RX1.** Figure 3.65 shows the signaling bit pattern for a prbs pattern. (There are no C or D bits for SF framing.)

```
                              DS1 Error Rate Test              ALARMS CLEAR
-------------------------------------------------------------------------------
01:01:05  01/01   SA AT 9000 ATLANTA GA     Slot 2 RX2 DS1        Mode:  SF B8ZS
END OF TEST RESULTS                         Timer: 00:00:03       Pattern:PRBS20
-------------------------------------------------------------------------------
                              DS1 Signaling Status
          1-6                  7-12                 13-18                19-24
        ------               ------               ------               ------
A   ?  ?  ?  ?  ?  ?    ?  ?  ?  ?  ?  ?    ?  ?  ?  ?  ?  ?    ?  ?  ?  ?  ?  ?
B   ?  ?  ?  ?  ?  ?    ?  ?  ?  ?  ?  ?    ?  ?  ?  ?  ?  ?    ?  ?  ?  ?  ?  ?
C   x  x  x  x  x  x    x  x  x  x  x  x    x  x  x  x  x  x    x  x  x  x  x  x
D   x  x  x  x  x  x    x  x  x  x  x  x    x  x  x  x  x  x    x  x  x  x  x  x
```

00853

Figure 3.65. PRBS Signaling Bit Pattern

3. Change the DS1 transmitter settings by typing **FRAME 4-TX1 SF <CR>CODE B8ZS<CR>PATTERN 1111.** Then type **SIGNALING 11-RX1.** Figure 3.66 shows you the signaling bit pattern with all 1s.

```
                                DS1 Error Rate Test                 ALARMS CLEAR
--------------------------------------------------------------------------------
01:01:05  01/01   SA AT 9000 ATLANTA GA     Slot 2 RX2 DS1       Mode:  SF B8ZS
END OF TEST RESULTS                         Timer: 00:00:03      Pattern:ALL 1S
--------------------------------------------------------------------------------
                                DS0 Signaling Status
          ---1-6---          ---7-12---          ---13-18---          ---19-24---
A   1  1  1  1  1  1    1  1  1  1  1  1    1  1  1  1  1  1    1  1  1  1  1  1
B   1  1  1  1  1  1    1  1  1  1  1  1    1  1  1  1  1  1    1  1  1  1  1  1
C   x  x  x  x  x  x    x  x  x  x  x  x    x  x  x  x  x  x    x  x  x  x  x  x
D   x  x  x  x  x  x    x  x  x  x  x  x    x  x  x  x  x  x    x  x  x  x  x  x
```

00854

Figure 3.66. All Ones Signaling Bit Pattern

4. Change the DS1 transmitter by typing **FRAME 4-TX1 <CR>CODE B8ZS<CR>PATTERN 0000.** Then type **SIGNALING 11-RX1.** Figure 3.67 shows you the signaling bits pattern with all 0s.

```
                                DS1 Error Rate Test                 ALARMS CLEAR
--------------------------------------------------------------------------------
01:01:05  01/01   SA AT 9000 ATLANTA GA     Slot 2 RX2 DS1       Mode:  SF B8ZS
END OF TEST RESULTS                         Timer: 00:00:03      Pattern:ALL 0S
--------------------------------------------------------------------------------
                                DS0 Signaling Status
          ---1-6---          ---7-12---          ---13-18---          ---19-24---
A   0  0  0  0  0  0    0  0  0  0  0  0    0  0  0  0  0  0    0  0  0  0  0  0
B   0  0  0  0  0  0    0  0  0  0  0  0    0  0  0  0  0  0    0  0  0  0  0  0
C   x  x  x  x  x  x    x  x  x  x  x  x    x  x  x  x  x  x    x  x  x  x  x  x
D   x  x  x  x  x  x    x  x  x  x  x  x    x  x  x  x  x  x    x  x  x  x  x  x
```

00855

Figure 3.67. All Zeros Signaling Bit Pattern

This is all you can do with Channel 1 of the DS1 2x2 Receiver.

3.3.12 DS1 2x2 Receiver, Channel 2

IMPORTANT NOTE

WHEN YOU MUST REPLACE U18... Several times in this procedure you may need to replace U18. When you do, before you go to the next step, calibrate the DS1 circuit **Step Six ONLY IF YOU REPLACE U18.**

NOTE

Replacements for some components on the DS1 2x2 receiver card are only available from Scientific-Atlanta. They're listed in Chapter 4, Parts List, but they're also listed here for your convenience.

Reference Designator	Scientific-Atlanta Part Number
U3	457040
U4	327878
U5	457040
U6	327876
U8	458327
U1	457040
U14	327878
U15	457040
U16	327876
U18	458327
U25	456215
U26	456213
U27	456214
U31	456216
U34, U35	Refer to Scientific-Atlanta for current number
Z1	327944
Z2	327944

NOTE

This procedure is for a DS1 Channel 2 receiver on a 2x2 card in slot 11 and a good DS1 transmitter card in slot 4. See Section 3.3.2.

The DS1 2x2 card has two diagnostic LEDs for each channel on the top edge. Here's what these LEDs indicate for Channel 2 receiver.

	Definition	Abbreviation	Reference Designator	STATUS Screen ALARMS Entry
DS1	Loss of Pattern	1PL	DS1	LOP
DS1	Out of Frame	1FL	DS3	OOF

The LEDs give hardware status. The CRT screen gives software status. Occasionally, it is convenient to compare readings to help isolate problems.

In this procedure you will be asked to check for data pattern A. Here's how you get data pattern A.

1. Connect DS1-TX2 in slot 4 to DS1-RX2 in slot 11.
2. Type **ADDR 4-TX2<CR>**. Then type **SETUP<CR>**. What you want to see is Figure 3.68 with the CLOCK entry INTERNAL. Change CLOCK entry, if you need to, by typing **CLOCK INTERNAL<CR>**. The screen won't change until you type **SETUP<CR>.**
3. Type **PATTERN 1010<CR>**. These entries will produce data pattern A, see Figure 3.69.
4. Put the DS1 2x2 card on the Scientific-Atlanta card extender.
5. Have the 2x2 card schematic handy and refer to Figure 3.70 to locate components.

```
REMOTE>addr 4-TX2

REMOTE (4-TX2)>setup

                Channel    :  DS1 4-TX2
             Tx Output     :  ON
                  Code     :  AMI
                 Frame     :  SF
               Pattern     :  PRBS-20

      Loopback (esf)       :  OFF
      Loopcode (esf)       :  CSU-LINE
      Loopback (sf)        :  OFF
      Loopcode (sf)        :  CSU-LINE

                Yellow     :  OFF
                 Clock     :  INTERNAL
              Tx-Busy      :  OFF

                Errors     :  Pattern: BIT    Frame: FBIT    Coding: BPV
```

02858

Figure 3.68. DS1 Transmitter Setup Screen

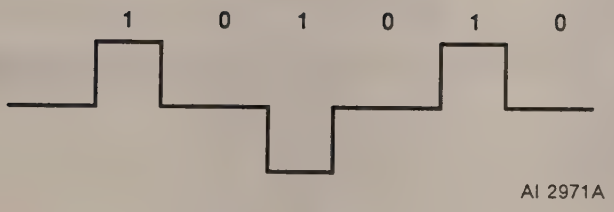

Figure 3.69. Data Pattern A, 1010

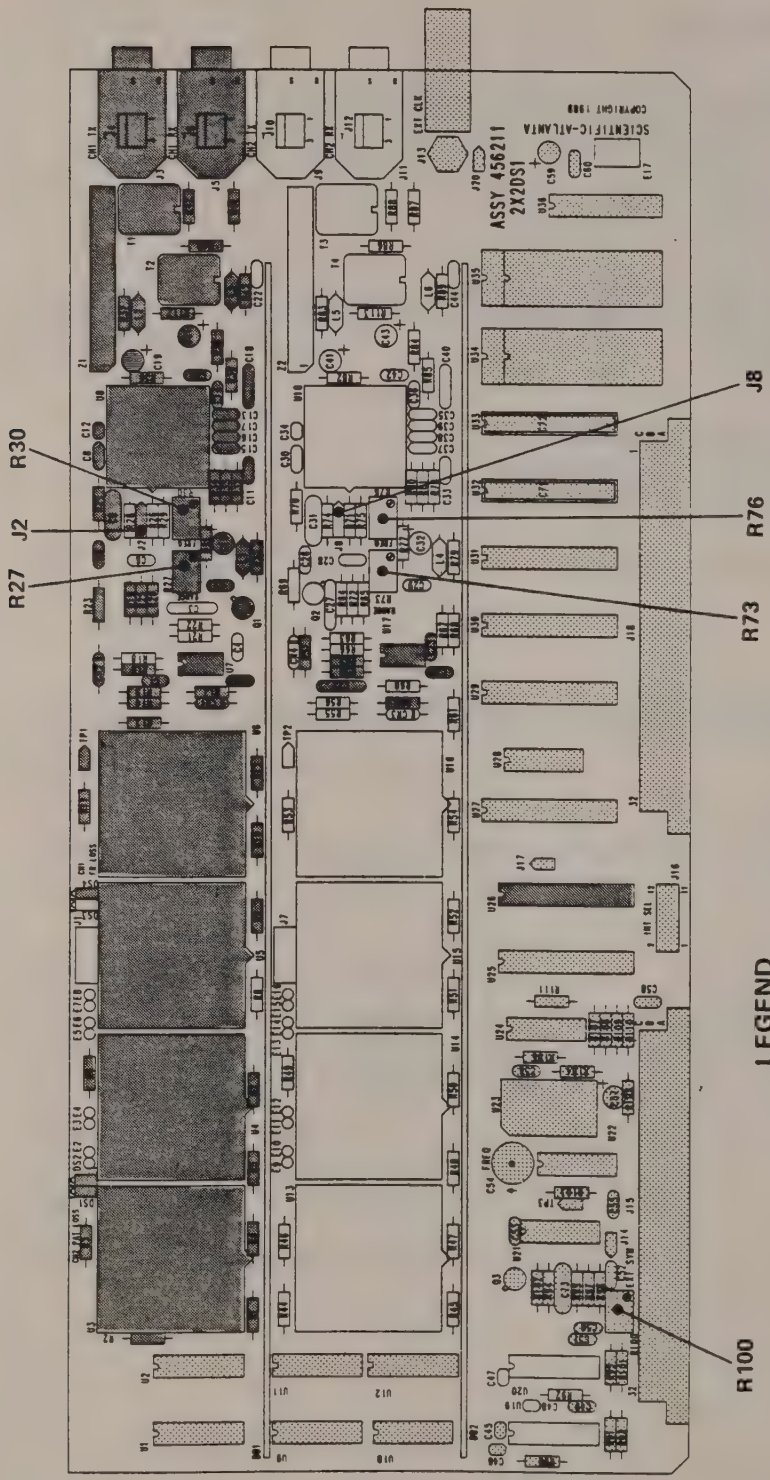

Figure 3.70. DS1 2x2 Card Components

Step One: Type **ADDR 11-RX2<CR> STATUS<CR>.**

NOTE

The STATUS screen shows a hierarchy of failures; LOS, OOF then LOP, e.g., Loss Of Signal, Out Of Frame and then Loss Of Pattern. Or, to put it another way, you can't solve an LOP problem until you have framing, and you can't solve a framing problem until you have a signal.

Let's take the case where your indication is Loss Of Signal.

ALARMS entry shows LOS. LOS (Loss Of Signal) indicates potential trouble in two areas: Either the clock recovery signal is not phase-locked with the input signal, or there is no input signal at all.

Use oscilloscope to check for data pattern A at pin 11 of U18.

No data pattern A at output pin 11 of U18. Check input pin 23 of U18 for data pattern A.

IMPORTANT NOTE

WHEN YOU MUST REPLACE U18... Several times in this procedure you may need to replace U18. When you do, before you go to the next step, calibrate the DS1 circuit **Step Six ONLY IF YOU REPLACE U18.**

Data pattern A at input pin 23 of U18. Replace U18.

No data pattern A at pin 23 of U18. Check cable at connection J12 and input. Check input to transformer T4, pin 3, for data pattern A.

Data pattern A is at pin 3 of transformer T4. Replace T4.

NOTE

A standard TTL pulse is logic zero between 0 and +0.8 volts. It is logic one between +2.4 and +5.2 volts.

Data pattern A is at output pin 11 of U18. With oscilloscope check for TTL clock pulse, 1.544 MHz, at U18, pin 30.

There are three possibilities; the TTL clock pulse is not there, the TTL clock pulse is there at 1.544 MHz, or the TTL clock pulse is there but not at 1.544 MHz.

IMPORTANT NOTE

WHEN YOU MUST REPLACE U18... Several times in this procedure you may need to replace U18. When you do, before you go to the next step, calibrate the DS1 circuit **Step Six ONLY IF YOU REPLACE U18.**

No TTL clock pulse at pin 30 of U18. Replace U18. Recheck for TTL clock pulse at pin 30 of U18.

Still no TTL clock pulse at pin 30 of U18. Check pin 5 of U18 for +5 volts ± 5%.

No voltage at pin 5 of U18. Check R79 and L4 for short or open circuits.

TTL clock pulse at 1.544 MHz is at pin 30 of U18. Check pin 28 of U18 for +5 volts dc.

-5 volts dc at pin 28 of U18. Replace U18.

+5 volts dc at pin 28 of U18. Check U16, pin 20 for a logic high (> +2.4 volts).

Pin 20 of U16 has logic high. Verify phase lock by checking pin 12 of U16 for logic low (< +0.8 volts).

Pin 12 of U16 has logic low. Replace U16.

TTL clock pulse is at pin 30 of U18 but not at 1.544 MHz. On pin 12 of U16, check for logic low.

Pin 12 of U16 has logic low. Replace U16 and then adjust phase lock. Here's how you do that.

(1) Connect frequency counter to TP2.

CAUTION

Skipping step (2) may damage the card.

(2) With no signal applied, remove jumper from J8 and put it on J23.

(3) Adjust R76 for a frequency of 1.54x MHz.

(4) Move jumper from J23 to J24 and adjust R73 for a frequency of 1.44x MHz.

(5) Repeat steps (2), (3) and (4) until you get the correct frequencies.

CAUTION

Skipping step (6) may damage the card.

(6) Remove jumpers from J23 and J24 and jumper pins 2 and 3 of J8. Spray U18 with Freeze-mist (frequency may drift) and then warm U8 to 40 °C. You should have no signal loss or errors.

Step Two: Type **STATUS<CR>.**

ALARMS entry shows OOF.

Check to see if framing is on. Here's how you do that.

Type **ADDR 4-TX2<CR> SETUP<CR> FRAME CPAR<CR> ADDR 11-RX2<CR> STATUS<CR>.**

ALARMS entry still shows OOF. There are two possibilities.

The first possibility is that U16 is not decoding properly. Check that first.

Type **ADDR 4-TX2<CR>SETUP<CR> PATTERN 1111<CR>ADDR 11-RX2<CR> STATUS<CR>.**

ALARMS entry shows OOF. With oscilloscope, check pin 55 of U16 for an all 1s pulse with an occasional (zero) framing bit. It looks like Figure 3.71.

Data with framing bit is at pin 55 of U16. Replace U15.

No data at pin 55 of U16. Replace U16. Type **STATUS<CR>.**

ALARMS entry shows CLEAR. Go to **Step Five:** Check Frequency.

ALARMS entry still shows OOF. This is all you can do to check if framing is on.

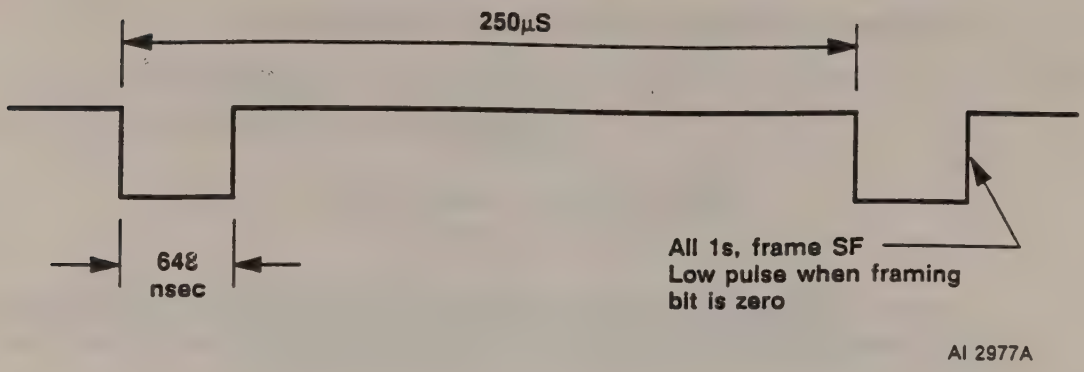

Figure 3.71. All Ones Data with Framing Bits

The second possibility is that you don't have phase lock. Here's how you check that.

Check pin 30 on U18 for TTL clock pulse at 1.544 MHz.

TTL clock pulse is at pin 30 of U18, but not at 1.544 MHz. Adjust phase lock.

(1) Connect frequency counter to TP2.

CAUTION

Skipping step (2) may damage the card.

(2) With no signal applied, remove jumper from J8 and jumper J23.

(3) Adjust R76 for a frequency of 1.54x MHz.

(4) Move jumper from J23 to J24 and adjust R73 for a frequency of 1.44x MHz.

(5) Repeat steps (2), (3) and (4) until you get the correct frequencies.

CAUTION

Skipping step (6) may damage the card.

(6) Remove jumpers from J23 and J24 and jumper pins 2 and 3 of J8. Spray U18 with Freeze-mist (frequency may drift) and then warm U8 to 40°C. You should have no signal loss or errors.

Step Three: Type **STATUS<CR>**.

ALARMS entry shows LOP. Replace U14. Type **STATUS<CR>**.

ALARMS entry shows CLEAR. Go to **Step Five:** Check Frequency.

ALARMS entry shows LOP. Replace U15.

Step Four: Type **STATUS<CR>**.

ALARMS entry shows AIS.

1. Type **ADDR 4-TX2<CR>**. Then type **SETUP<CR>**. What you want to see is Figure 3.68 with the CLOCK entry INTERNAL. Change CLOCK entry, if you need to, by typing **CLOCK INTERNAL<CR>**. The screen won't change until you type **SETUP<CR>**.

2. Type **PATTERN 1111<CR>**. These entries will produce data pattern A, see Figure 3.72. With your oscilloscope pin 11 of U18 for data pattern A.

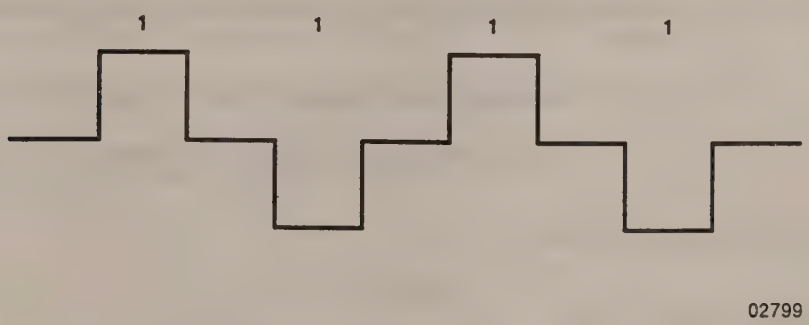

Figure 3.72. Data Pattern A, 1111

3. Type **ADDR 11-RX2<CR> STATUS<CR>**.

ALARMS entry shows CLEAR. Put 2x2 card back in analyzer, reassemble analyzer, and repeat Section 3.2, making sure to check all transmitters against all receivers.

Step Five: Check Frequency.

Type **ADDR 11-RX2<CR> STATUS<CR>**. The status screen should show "___Freq.(1.544002) +1ppm", which means the DS1 output frequency is 1.544002 MHz, and is 1 part per million high.

DS1 input signal frequency is 1.544 MHz. Remove card extender, plug 2x2 card back into mothercard, and reassemble analyzer. Turn on the analyzer and repeat procedures in Section 3.2, making sure you check all transmitters against all receivers.

No DS1 frequency measurement, screen shows "Freq.(n/a)". With oscilloscope check signal at pin 11 of U9 and U11 for a square wave.

No square wave at pin 11 of U9 and U11. Check pin 7 of connector J18B.

Square wave at pin 7 of J18B. Replace U25.

Square wave is not at pin 7 of J18B. Check mothercard, Section 3.3.19.

Square wave is at pin 11 of U9 and U11. Check pin 13 of U9 and U11 for clock pulses, 2.6 microseconds wide, 50 milliseconds apart.

Clock pulse is at pin 13 of U9 and U11. Replace U11 and, if necessary, U9.

No clock pulse at pin 13 of U11. Replace U26 and, if necessary, U16.

Still no clock pulse at pin 13 of U11. Check for 50-millisecond latch signal at pin 58 of U16.

No clock pulse at pin 58 of U16. Check pin 27 of J18B for 50-millisecond latch signal.

Clock pulse at pin 27 of J18B. Replace buffer U24.

No clock pulse at pin 27 of J18B. Run diagnostic test, Section 3.3.18.

Step Six: How To Calibrate DS1 Receiver

1. Connect frequency counter to TP2.

CAUTION

Skipping step (2) may damage the card.

2. With no signal applied, remove jumper from J8 and jumper J23.

3. Adjust R76 for a frequency of 1.54x MHz.

4. Move jumper from J23 to J24 and adjust R73 for a frequency of 1.44x MHz.

5. Repeat steps (2), (3) and (4) until you get the correct frequencies.

CAUTION

Skipping step (6) may damage the card.

6. Remove jumpers from J23 and J24 and jumper pins 2 and 3 of J8. Spray U18 with Freeze-mist (frequency may drift) and then warm U8 to 40 °C. You should have no signal loss or errors.

7. Remove signal cable, and then reconnect. Frequency is 1.54 MHz.

8. Set DS1 transmitter by typing **FRAME 4-TX2 SF<CR>CODE AMI<CR> PATTERN 3IN24<CR>.** Frequency stays at 1.54 MHz.

9. Disconnect and reconnect signal cable ten times and verify lockup (frequency stays the same.)

10. Change DS1 transmitter by typing **PATTERN 1-7<CR>.** Disconnect and reconnect signal cable several times and verify lockup (frequency stays the same).

11. Change transmitter by typing **CODE B8ZS<CR>PATTERN PRBS-23<CR>.** Type **REP 11-RX2 REM REF 00:01:00** and verify lockup (frequency stays the same).

12. Replace signal cable with 27 dB cable and run one-minute test and verify no errors.

Step Seven: How to Check Signaling Bits

NOTE

When the signaling bit pattern is incorrect, replace U16.

1. Connect DS1 transmitter output to DS1 transmitter input. Set the DS1 transmitter like this: Type **FRAME 4-TX2 SF<CR>CODE B8ZS<CR>PATTERN PRBS 20<CR>.**

2. Use the demux card address and type **SIGNALING 11-RX2**. Figure 3.73 shows the signaling bit pattern for a PRBS pattern. (There are no C or D bits for SF framing.)

```
                                DS1 Error Rate Test                ALARMS CLEAR
-------------------------------------------------------------------------------
01:01:05  01/01   SA AT 9000 ATLANTA GA     Slot 2 RX2 DS1        Mode:  SF B8ZS
END OF TEST RESULTS                         Timer: 00:00:03       Pattern:PRBS20
-------------------------------------------------------------------------------
                                DS1 Signaling Status
          1-6                  7-12                 13-18                19-24
        ------               ------               ------               ------
A   ?  ?  ?  ?  ?  ?    ?  ?  ?  ?  ?  ?    ?  ?  ?  ?  ?  ?    ?  ?  ?  ?  ?  ?
B   ?  ?  ?  ?  ?  ?    ?  ?  ?  ?  ?  ?    ?  ?  ?  ?  ?  ?    ?  ?  ?  ?  ?  ?
C   x  x  x  x  x  x    x  x  x  x  x  x    x  x  x  x  x  x    x  x  x  x  x  x
D   x  x  x  x  x  x    x  x  x  x  x  x    x  x  x  x  x  x    x  x  x  x  x  x

                                                                        00853
```

Figure 3.73. PRBS Signaling Bit Pattern

3. Change the DS1 transmitter settings by typing **FRAME 4-TX2 SF<CR>CODE B8ZS<CR>PATTERN 1111.** Then type **SIGNALING 11-RX2**. Figure 3.74 shows you the signaling bit pattern with all 1s.

```
                                DS1 Error Rate Test                ALARMS CLEAR
-------------------------------------------------------------------------------
01:01:05  01/01   SA AT 9000 ATLANTA GA     Slot 2 RX2 DS1        Mode:  SF B8ZS
END OF TEST RESULTS                         Timer: 00:00:03       Pattern:ALL 1S
-------------------------------------------------------------------------------
                                DS0 Signaling Status
          1-6                  7-12                 13-18                19-24
        ------               ------               ------               ------
A   1  1  1  1  1  1    1  1  1  1  1  1    1  1  1  1  1  1    1  1  1  1  1  1
B   1  1  1  1  1  1    1  1  1  1  1  1    1  1  1  1  1  1    1  1  1  1  1  1
C   x  x  x  x  x  x    x  x  x  x  x  x    x  x  x  x  x  x    x  x  x  x  x  x
D   x  x  x  x  x  x    x  x  x  x  x  x    x  x  x  x  x  x    x  x  x  x  x  x

                                                                        00854
```

Figure 3.74. All Ones Signaling Bits

4. Change the DS1 transmitter by typing **FRAME 4-TX2 SF<CR>CODE B8ZS<CR>PATTERN 0000.** Then type **SIGNALING 11-RX2.** Figure 3.75 shows you the signaling bits pattern with all 0s.

```
                              DS1 Error Rate Test              ALARMS CLEAR
---------------------------------------------------------------------------
01:01:05  01/01   SA AT 9000 ATLANTA GA      Slot 2 RX2 DS1        Mode:  SF B8ZS
END OF TEST RESULTS                          Timer: 00:00:03       Pattern:ALL 0S
---------------------------------------------------------------------------
                               DS0 Signaling Status
           1-6                 7-12                13-18                19-24
A    0  0  0  0  0  0    0  0  0  0  0  0    0  0  0  0  0  0    0  0  0  0  0  0
B    0  0  0  0  0  0    0  0  0  0  0  0    0  0  0  0  0  0    0  0  0  0  0  0
C    x  x  x  x  x  x    x  x  x  x  x  x    x  x  x  x  x  x    x  x  x  x  x  x
D    x  x  x  x  x  x    x  x  x  x  x  x    x  x  x  x  x  x    x  x  x  x  x  x
```

00855

Figure 3.75. All Zeros Signaling Bits

This is all you can do to the DS1 2x2 card, Channel 2 receiver.

3.3.13 DS3 Two-point Receiver, Channel 1

IMPORTANT NOTE

WHEN YOU MUST REPLACE U8... Several times in this procedure, you may replace U8. When you do, and before you go to the next step, you must calibrate the circuit with the procedures in **Step Five. ONLY WHEN YOU REPLACE U8.**

NOTE

Here is a list of replacement components on the DS3 two-point card that are only available from Scientific-Atlanta.

Reference Designator	Scientific-Atlanta Part Number
U3	327878
U4	327877
U5	327876
U8	327875
U12	327878
U13	327877
U14	327876
U17	327875
U23	309248
U24	309249
U25	456200
U29	456201
U32,U35	Refer to Scientific-Atlanta for current number

NOTE

This procedure is for a DS3 Channel 1 receiver on a two-point card in slot 9 with a good DS3 transmitter card in slot 4. In this procedure you will be asked to look for data pattern A. Here's how you get data pattern A.

1. Connect DS3-TX1 in slot 4 to DS3-RX1 in slot 9.

2. Type **ADDR 4-TX1<CR> SETUP<CR>**. What you want to see is Figure 3.76 with the CLOCK entry INTERNAL. Change CLOCK entry, if you need to, by typing **CLOCK INTERNAL<CR>**.

3. Type **PATTERN 1010<CR>**. These entries will produce data pattern A, see Figure 3.77.

```
REMOTE>addr 4-TX1

REMOTE (4-TX1)>setup

          Channel   :  DS3 4-TX1
       Tx Output    :  ON
            Level   :  DSX
            Frame   :  M13
          Pattern   :  PRBS-15
            Clock   :  INTERNAL
         Tx-Busy    :  OFF
            Xbit    :  1

           Errors   :  Pattern: BIT    Frame: FBIT    Coding: BPV

REMOTE (4-TX1)>
```

02859

Figure 3.76. DS3 Two-point Transmitter Setup Screen

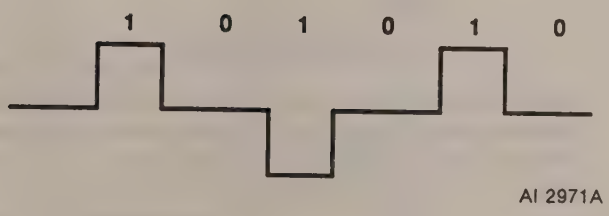

Figure 3.77. Data Pattern A, 1010

Have the two-point receiver schematic handy and refer to Figure 3.78 to locate components.

1. Put the two-point card on the Scientific-Atlanta card extender.
2. Disconnect rear-panel cables.
3. Check for supply voltages of +5 volts dc at connector J21, row C, pin 2, see Figure 3.79.

   +5 volts dc at pin 2 of J21C. Proceed with test.

   No voltage at pin 2 of J21C. Go to Section 3.3.2, Checking Power Supply.
4. Type **ADDR 9-RX1<CR>**.

Step One: Type **STATUS<CR>**.

NOTE

The STATUS screen shows a hierarchy of failures; LOS, OOF then LOP, e.g., Loss Of Signal, Out Of Frame and then Loss Of Pattern. Or, to put it a different way, you can't solve an LOP problem until you have framing, and you can't solve a framing problem until you have a signal.

Let's take the case where your indication is Loss Of Signal.

ALARMS entry shows LOS.

Use oscilloscope to check output pin 11 of U8 for data pattern A.

IMPORTANT NOTE

WHEN YOU MUST REPLACE U8... Several times in this procedure, you may replace U8. When you do, and before you go to the next step, you must calibrate the circuit with **Step Five. ONLY WHEN YOU REPLACE U8.**

No data pattern A at output pin 11 of U8. Check input pin 23 of U8 for data pattern A.

Data pattern A at input pin 23 of U8. Replace U8.

Data pattern A not at input pin 23 of U8. Check input to relay K1, pin 10 for data pattern A.

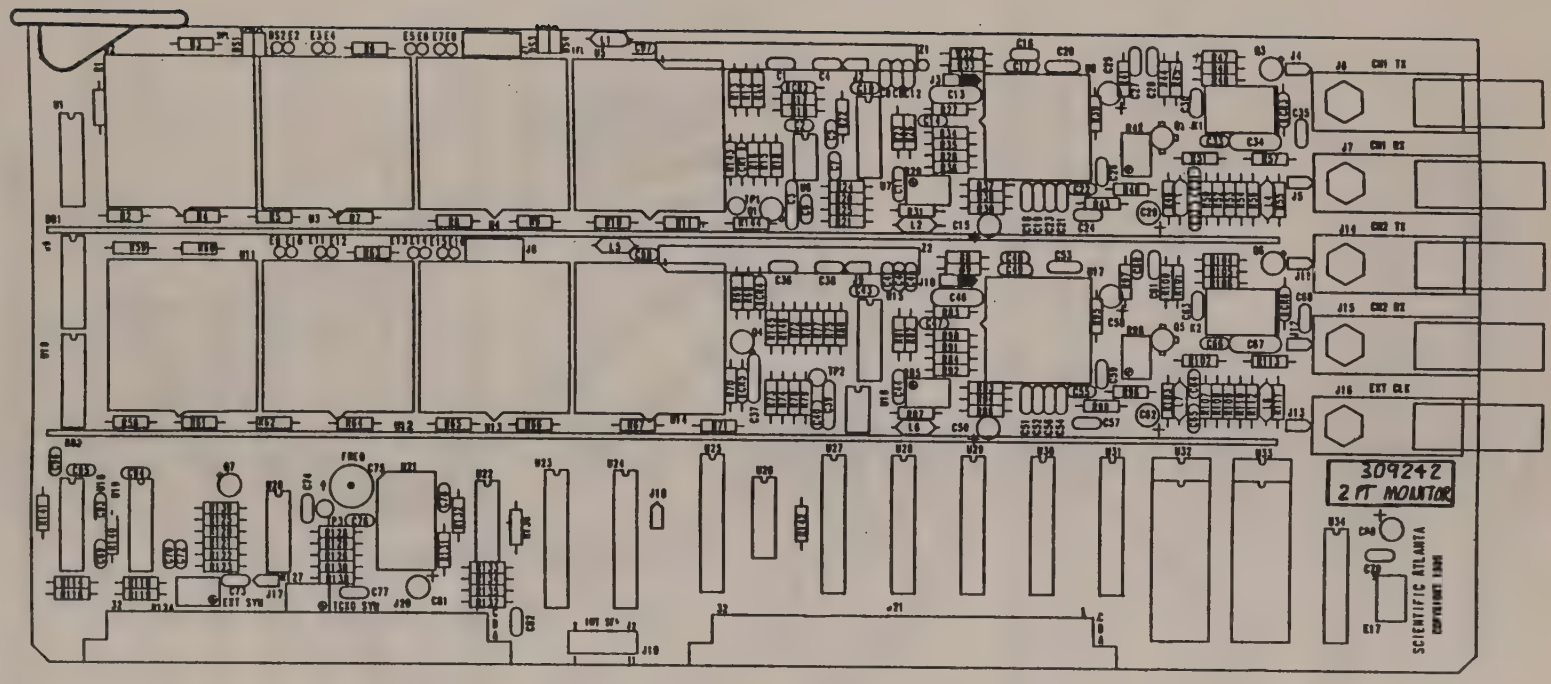

Figure 3.78. DS3 Two-point Card Components

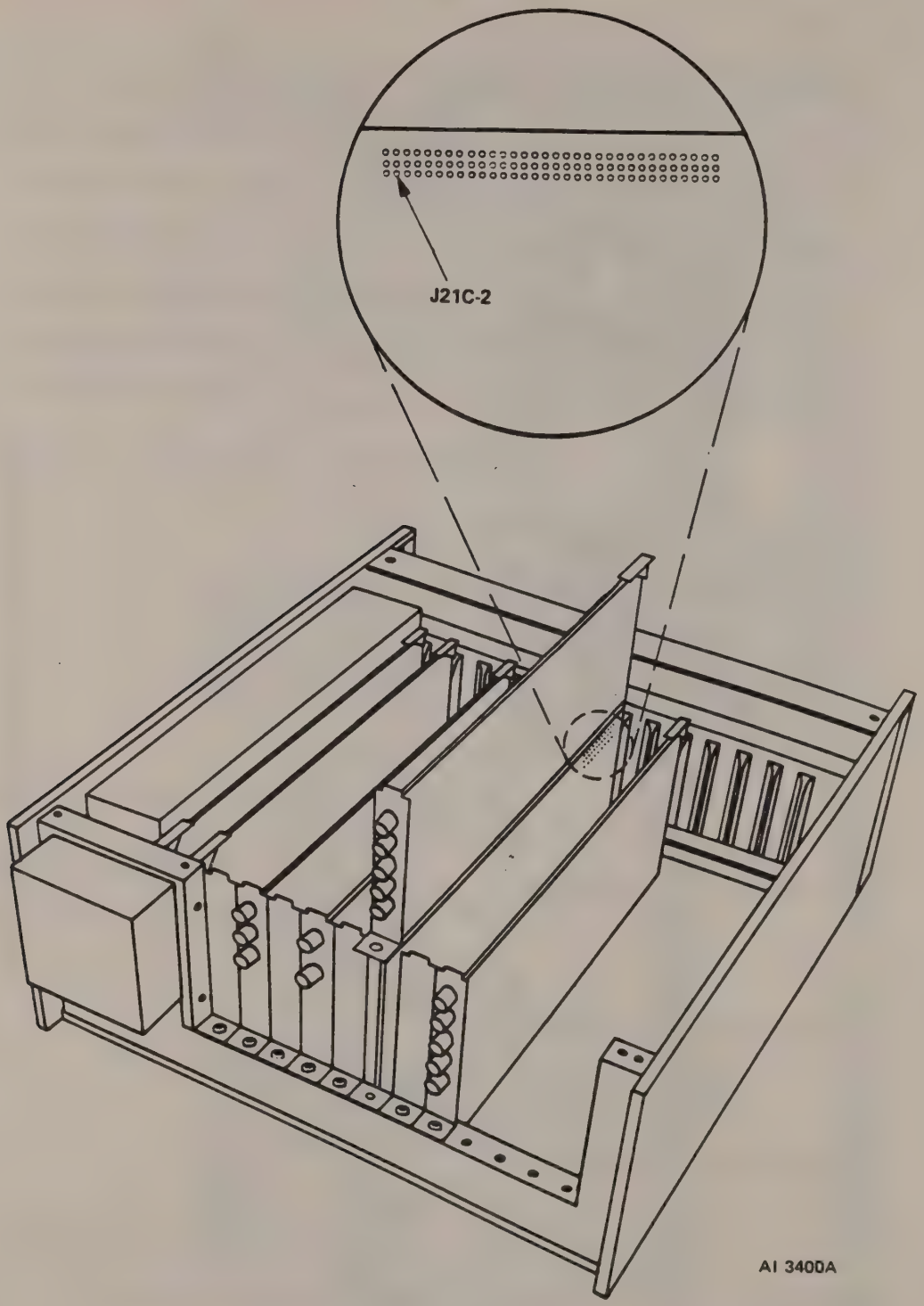

Figure 3.79. DS3 Two-point Card Supply Voltages

Data pattern A is at pin 10 of relay K1. Type **ADDR 4- TX1<CR> LEVEL DSX-LOW<CR>**. Check pin 3 of relay K1 for data pattern A.

No data pattern A at pin 3 of K1. Check base of Q2 for data pattern A.

No data pattern A at base of Q2. Replace Q2 and type **LEVEL DSX-HIGH<CR>**. Check pin 3 of relay K1 for data pattern A.

No data pattern A at pin 3 of K1. Replace K1.

Data pattern A is at output pin 11 of U8. With oscilloscope, check output of U8 at pin 30 for TTL clock pulse at 44.736 MHz.

There are three possibilities: There is no TTL clock pulse at pin 30 of U8, there is a TTL clock pulse at the correct frequency, or there is a TTL clock pulse there but the frequency is wrong.

IMPORTANT NOTE

WHEN YOU MUST REPLACE U8... Several times in this procedure, you may replace U8. When you do, and before you go to the next step, you must calibrate the circuit with **Step Five. ONLY WHEN YOU REPLACE U8.**

No TTL clock pulse at pin 30 of U8. Replace chip U8.

TTL clock pulse at 44.736 MHz is at pin 30 of U8. Check for +5 volts dc at pin 28 of U8.

-5 volts at pin 28 of U8. Replace U8.

+5 volts dc at pin 28 of U8. Check U5 pin 12 for a logic zero (< +0.4 volts).

Pin 12 of U5 has a logic zero. Replace buffer U6. Check output of U5 at pin 58 for a 50-millisecond square wave.

Square wave at pin 58 of U5. Replace U5.

No square wave at pin 58 of U5. Check input of buffer U22, pin 9.

Square wave at pin 9 of U22. Replace U22.

No square wave at pin 9 of U22. Run Diagnostic Test, Section 3.3.18.

TTL clock pulse is at pin 30 of U8 but not at 44.736 MHz. Set up DS3 Clock Recovery.

1. Connect frequency counter to TP1. Jumper pins 1 and 2 of J3 and adjust R29 for a frequency reading of 45.x MHz.

2. Short pin 6 of U8 to -5.2 volts (pin 8); frequency is 38 MHz.

   Frequency is greater than 38 MHz. Replace U8.

   Frequency 38 MHz or less. Go to next step in this procedure.

3. Remove short from pin 6 and 8 of U8. Adjust R29 for a frequency of 47 MHz.

4. Jumper pins 1 and 2 of J3. Set DS3 transmitter by typing **PATTERN 1111.** Frequency shows 44.736 MHz. (Signals are phase locked.)

5. Adjust R29 to set voltage at pin 3 of U8 to 0 volts ± 0.25 volts.

6. Spray U8 with Freeze-mist (loop may break lock) and then warm U8 to 40°C. You should see no errors nor lose the signal.

   Counter does not read 44.736 MHz (clock does not lock to 44.736 MHz). Check U5, pin 12 for a logic high.

   Pin 12 of U5 is not at a logic high. Check U6, pin 1 for +5 volts.

   Pin 1 of U6 is not +5 volts. Check U6, pin 3 to be more negative than U6, pin 2.

   Pin 3 of U6 is more negative than pin 2 of U6. Replace U8.

   Pin 12 of U5 is at a logic high. Set oscilloscope on 1-volt scale, and check pin 6 of U8 for a triangular sweep wave going above and below zero.

   Triangular wave on pin 6 of U8. Replace U8.

   No triangular wave on pin 6 of U8. Check U16, pin 1 for triangular wave.

   No triangular wave on pin 1 of U16. Check U26, pin 8 for 100-millisecond square wave.

   No square wave at pin 8 of U26. Check pin 9 of U26 for a square wave.

   Square wave at pin 9 of U26. Replace U26.

   Square wave not at pin 9 of U26. Replace U24.

   Square wave is at pin 1 of U16. Replace U16.

   Square wave is not at pin 1 of U16. Replace U8.

   Triangular wave is on pin 1 of U16. Replace Q1.

Let's review. You still have an ALARMS entry on the STATUS screen even though we have an external DS3 signal applied. U8 is good, and so are the components associated with it. This should take care of the LOS problem.

Step Two: Type **ADDR 9-RX1<CR> STATUS<CR>.**

ALARMS entry shows OOF.

Check to see if framing is on. Here's how you do that.

1. Type **ADDR 4-TX1<CR> FRAME CPAR<CR>.**
2. Type **ADDR 9-RX1<CR> STATUS<CR>.**

   ALARMS entry still shows OOF. Check that U5 is decoding properly.
3. Type **ADDR 4-TX1<CR> PATTERN 1111<CR>.**
4. Type **ADDR 9-RX1<CR> STATUS<CR>.**

   ALARMS entry still shows OOF. With oscilloscope, check pin 55 on U5 for all 1s data with an occasional (zero) framing bit. The data looks like Figure 3.80.

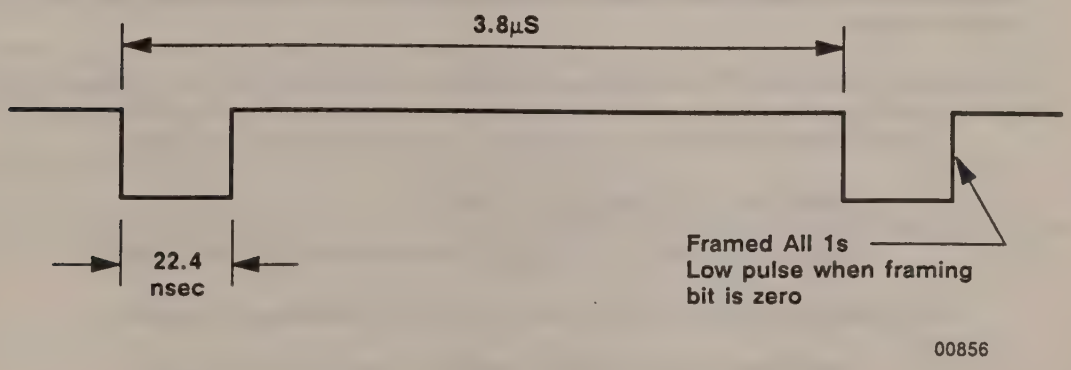

Figure 3.80. All Ones Data with Framing Bits

Data with framing bit is at pin 55 of U5. Replace U4 and type **STATUS<CR>.**

ALARMS entry shows CLEAR. Go to **Step Four:** Check Frequency.

No data with framing bit at pin 55 of U5. Replace U5 and type **STATUS<CR>.**

ALARMS entry shows CLEAR. Go to **Step Four:** Check Frequency.

ALARMS entry shows LOP. Replace U3 and type **STATUS<CR>**.

ALARMS entry shows CLEAR. Go to **Step Four:** Check Frequency.

ALARMS entry still shows LOP. Replace U4.

Step Three: Check **BLUE** Pattern.

Type **ADDR 4-TX1<CR> PATTERN BLUE<CR> ADDR 9-TX1<CR> STATUS<CR>.**

ALARMS entry shows CLEAR. Go to **Step Four:** Check Frequency.

ALARMS entry shows BLUE. Take two-point card off card extender, plug into mothercard, reassemble analyzer and repeat procedures of Section 3.2, making sure you check all transmitters with all receivers.

Step Four: Check Frequency.

Type **ADDR 9-RX1<CR> STATUS<CR>.** Frequency entry shows, for example, "Freq.(44.73642)... +9ppm", which means the DS3 frequency is 44.73642 MHz.

Screen shows "Freq.(44.736...)...". DS3 output frequency is good. Remove card extender, plug two-point card back into mothercard, and replace analyzer top. Turn on analyzer and repeat procedures in Section 3.2 that apply to this card.

Screen shows "Freq.(n/a)". With oscilloscope, check pulse on pin 11 of U1 for a TTL pulse at 6.176 MHz.

No clock pulse at pin 11 of U1. Check pin 7 of connector J21B for clock pulse.

Clock pulse at pin 7 of J21B. Replace U24.

Clock pulse is not at pin 7 of J21B. Check Mothercard, Section 3.3.19.

Clock pulse at pin 11 of U1. Check pin 13 of U1 for 50-millisecond latch signal.

Latch signal is at pin 13 of U1. Replace U1 and check pin 13 again.

No latch signal at pin 13 of U1. Run Diagnostic Test, Section 3.3.18.

Step Five: How To Calibrate The DS3 Circuit

1. Connect frequency counter to TP1 and jumper pins 2 and 3 of J3. Adjust R29 for a frequency of 45.x MHz.
2. Short pin 6 of U8 to -5.2 volts (pin 8); frequency should be 38 MHz.

Frequency is greater than 38 MHz. Replace U8 and start procedure over.

Frequency is 38 MHz or less. Go to next step in this procedure.

3. Remove short between pins 6 and 8 of U8 and adjust R29 for a frequency of 47 MHz.

4. Jumper pins 1 and 2 on J3. Type **PATTERN 4-TX1 1111<CR>**. Frequency is 44.736 MHz (signals are phase locked).

5. Adjust R29 until voltage at pin 3 of U8 is 0 volts ± 0.25 volts. Spray U8 with Freeze-mist then warm U8 to 40 ° C. (Signal may break lock.) You should not lose signal or see any errors.

6. Type **LEVEL 4-TX1 HIGH<CR>**. Connect the full length of DTA/DAS long test cable (Scientific-Atlanta part number 306159) from DS3 TX1 to DS3 RX.

7. Type **LEVEL 9-RX1 DSX-LOW<CR>**.

8. Connect digital voltmeter to the junction of R22, C5 and ground. Remove jumper from J3 and adjust R42 for a voltage between 100 and 105 millivolts.

9. Jumper pins 1 and 2 on J3. Frequency is 44.736 MHz and voltage is less than -225 millivolts.

10. Replace long cable with a short one. Type **LEVEL 4-TX1 LOW<CR>**. Frequency stays at 44.736 and voltage stays below -225 millivolts.

11. Type **PATTERN BLUE<CR>**. Frequency stays at 44.736 and voltage stays below -225 millivolts.

Voltage is above -225 millivolts. Adjust R37 until voltage is between -225 millivolts and -255 millivolts.

12. Remove jumper from J3. Voltage is more than +50 millivolts.

Voltage is between +30 millivolts and +50 millivolts. Adjust R37 until voltage is more than +50 millivolts.

13. Jumper pins 1 and 2 on J3. Voltage is less than -225 millivolts.

14. Type **LEVEL 4-TX1 DSX<CR>FRAME M13<CR>PATTERN PRBS-15.** Remove R28 and connect a test circuit to the ASIC like this:

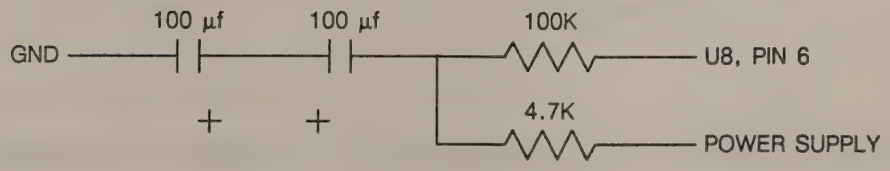

Make sure the lead from pin 6 of U8 to the resistors is less than 6 inches.

15. Type **RUN <CR> SUMMARY 9-RX1<CR>**. Connect 10 volts dc power supply to the test circuit and set to zero volts.

NOTE

In the next two steps, using the DS3 MEASUREMENTS screen, watch **BOTH** error seconds and total bit errors. When the error rate is high, error seconds may change but total bit errors may not.

When you can't get a zero error rate at a positive voltage (step 16), adjust the voltage to the smallest negative voltage that just begins to produce errors.

When you can't get a zero error rate at a negative voltage (step 17), adjust the voltage to the smallest positive voltage that just begins to produce errors.

16. Adjust voltage toward +10 volts until errors start and then carefully adjust voltage toward zero until errors just stop. **Write down this voltage, including its sign. You'll need it later. This is V1.** Type **STOP <CR>** to stop the test.

17. Set test voltage back to zero, then adjust it toward -10 volts until errors start, then adjust voltage toward zero until errors stop. **Write down this voltage, including its sign. This is V2.** Type **STOP <CR>** to stop test.

18. Calculate V3 = V1 + V2.

    V3 is between +0.5 volts and -0.5 volts. Calibration is correct. Go to step 19.

    V3 is more than +0.5 or less than -0.5 volts. Go to step 16 in this procedure.

19. Choose offset correction resistor from Resistor Table that corresponds to the value of V3 calculated in step 18. Connect it between -5.2 volts (U8, pin 8 and U8, pin 6).

RESISTOR TABLE
(R in Kilohms, V3 in volts)

	V3			V3			V3	
R	max	min	R	max	min	R	max	min
2210	0.58	0.50	487	2.16	2.11	226	4.65	4.54
1500	0.77	0.58	475	2.22	2.16	221	4.77	4.65
1240	0.86	0.77	464	2.30	2.22	215	4.77	4.77
1180	0.91	0.86	442	2.41	2.30	205	5.14	4.96
1100	0.99	0.91	422	2.53	2.41	200	5.25	5.14
1000	1.07	0.99	402	2.62	2.53	196	5.43	5.25
953	1.12	1.07	392	2.68	2.62	187	5.64	5.43
909	1.17	1.12	383	2.78	2.68	182	5.78	5.64
866	1.23	1.17	365	2.92	2.78	178	6.00	5.78
825	1.29	1.23	348	3.06	2.92	169	6.29	6.00
787	1.35	1.29	332	3.21	3.06	162	6.59	6.29
750	1.42	1.35	316	3.37	3.21	154	6.84	6.59
715	1.49	1.42	301	3.50	3.37	150	7.00	6.84
681	1.56	1.49	294	3.58	3.50	147	7.25	7.00
649	1.64	1.56	287	3.71	3.58	140	7.62	7.25
619	1.72	1.64	274	3.89	3.71	133	8.00	7.62
590	1.81	1.72	261	4.03	3.89	127	8.39	8.00
562	1.87	1.81	255	4.13	4.03	121	8.82	8.39
549	1.92	1.87	249	4.23	4.13	115	9.12	8.82
536	1.99	1.92	243	4.33	4.23	113	9.33	9.12
511	2.06	1.99	237	4.44	4.33	110	9.68	9.33
499	2.11	2.06	232	4.54	4.44	105	10.15	9.68

20. Repeat steps 16, 17, and 18.

V3 is between -0.5 volts and +0.5 volts. Install correction resistor as R28 and go to step 21.

V3 is less than -0.5 volts or more than +0.5 volts. Take the correction resistor off and repeat procedure, starting with step 15.

21. Repeat steps 14 through 19.

22. Run a one minute test by typing **TIMER 9-RX1 00:01:00<CR>RUN<CR>SUMMARY<CR>.** Verify there are no errors. Type **STOP <CR>** to stop the test.

23. Type **LEVEL DSX-LOW<CR>** then type **LEVEL 4-TX1 DSX<CR>** then type **TIMER 9-RX1 00:01:00<CR>RUN<CR>SUMMARY<CR>** and verify there are no errors. Type **STOP <CR>** to stop the test.

24. Type **LEVEL 4-TX1 LOW<CR>** then type **TIMER 9-RX1 00:01:00<CR>RUN<CR>SUMMARY<CR>** and verify there are no errors. Type **STOP <CR>** to stop the test.

25. Disconnect and reconnect test cable and verify that frequency is 44.736 MHz.

26. Type **LEVEL 4-TX1 DSX-MON<CR>** and verify frequency is 44.736 MHz.

27. Type **LEVEL DSX<CR>.** Connect transmitter to receiver through a 26 dB pad. Type **TIMER 9-RX1 00:01:00<CR>RUN<CR>SUMMARY<CR>** and verify there are no errors.

28. Replace 26 dB pad with standard signal cable. Type **ERRORS 4-TX1 BURST 10MS<CR>.** Then verify errors have been detected by typing **SUMMARY 9-RX1<CR>.** Verify errors are detected. Type **STOP <CR>** to stop the test.

This is all you can do with the DS3 two-point Channel 1 receiver.

3.3.14 DS3 Two-point Receiver, Channel 2

IMPORTANT NOTE

WHEN YOU MUST REPLACE U17... Several times in this procedure, you may replace U17. When you do, and before you go to the next step, you must calibrate the circuit with **Step Five. ONLY WHEN YOU REPLACE U17.**

NOTE

Here is a list of replacement components on the DS3 two-point card that are only available from Scientific-Atlanta.

Reference Designator	Scientific-Atlanta Part Number
U3	327878
U4	327877
U5	327876
U8	327875
U12	327878
U13	327877
U14	327876
U17	327875
U23	309248
U24	309249
U25	456200
U29	456201
U32, U33	Refer to Scientific-Atlanta for current number

NOTE

This procedure is for a DS3 Channel 2 receiver on a two-point card in slot 9 with a good DS3 transmitter card in slot 4. In this procedure you will be asked to look for data pattern A. Here's how you get data pattern A.

1. Connect DS3-TX2 in slot 4 to DS3-RX2 in slot 9.

2. Type **SETUP ADDR 4-TX2 <CR>**. What you want to see is Figure 3.81 with the CLOCK entry INTERNAL. Change CLOCK entry, if you need to, by typing **CLOCK INTERNAL<CR>**.

```
REMOTE>addr 4-TX2

REMOTE (4-TX2)>setup

      Channel  :  DS3 4-TX2
   Tx Output   :  ON
        Level  :  DSX
        Frame  :  M13
      Pattern  :  PRBS-15
        Clock  :  INTERNAL
     Tx-Busy   :  OFF
         Xbit  :  1

      Errors   :  Pattern: BIT    Frame: FBIT    Coding: BPV
```

00456-01

Figure 3.81. DS3 Two-point Transmitter Setup Screen

3. Type **PATTERN 1010<CR>**. These entries will produce data pattern A, see Figure 3.82.

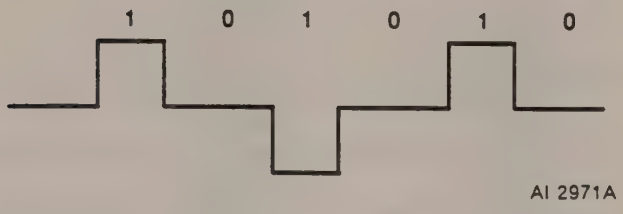

Figure 3.82. Data Pattern A, 1010

Have the two-point receiver schematic handy and refer to Figure 3.83 to locate components.

1. Put the two-point card on the Scientific-Atlanta card extender.
2. Disconnect rear-panel cables.
3. Check for supply voltages of +5 volts dc at connector J21, row C, pin 2, see Figure 3.84.

   +5 volts dc at pin 2 of J21C. Proceed with test.

   No voltage at pin 2 of J21C. Go to Section 3.3.2, Checking Power Supply.
4. Type **9-RX2<CR>**.

Step One: Type **STATUS<CR>**.

NOTE

The STATUS screen shows a hierarchy of failures; LOS, OOF then LOP, e.g., Loss Of Signal, Out Of Frame and then Loss Of Pattern. Or, to put it a different way, you can't solve an LOP problem until you have framing, and you can't solve a framing problem until you have a signal.

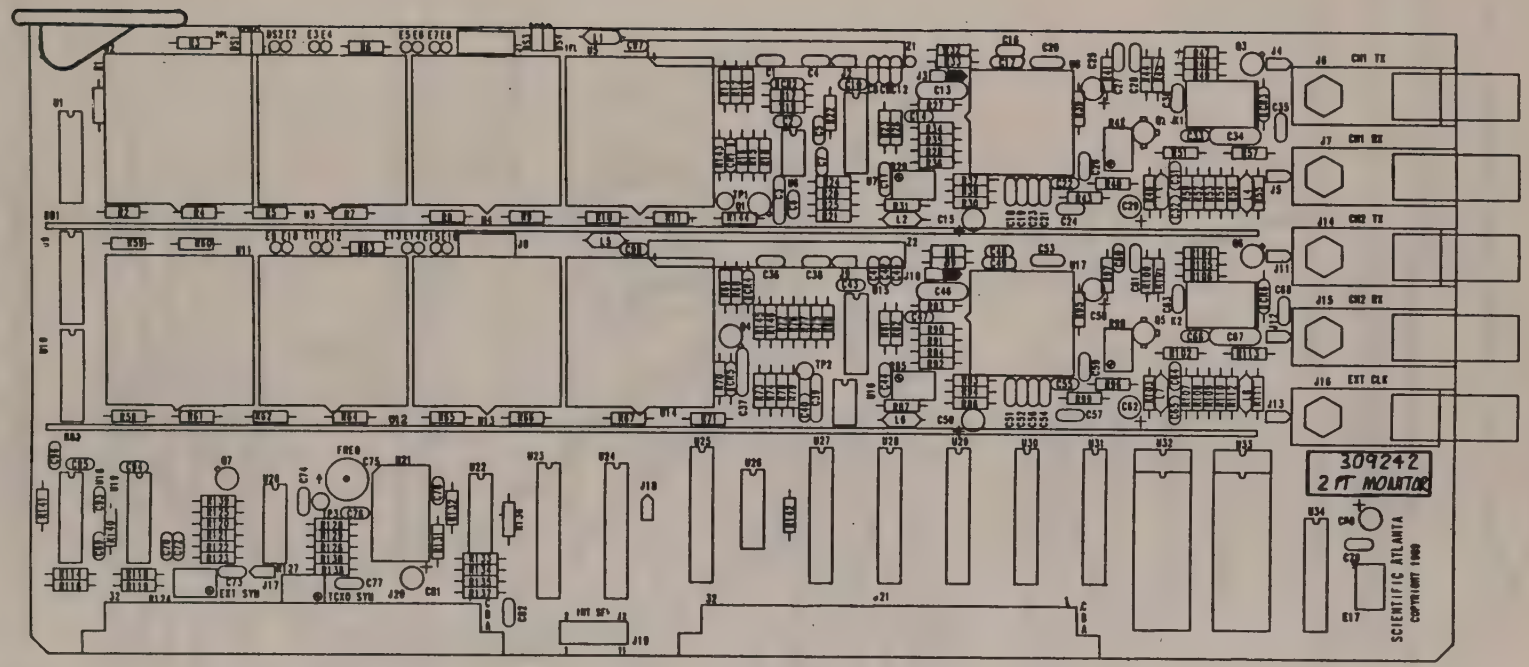

Figure 3.83. DS3 Two-point Card Components

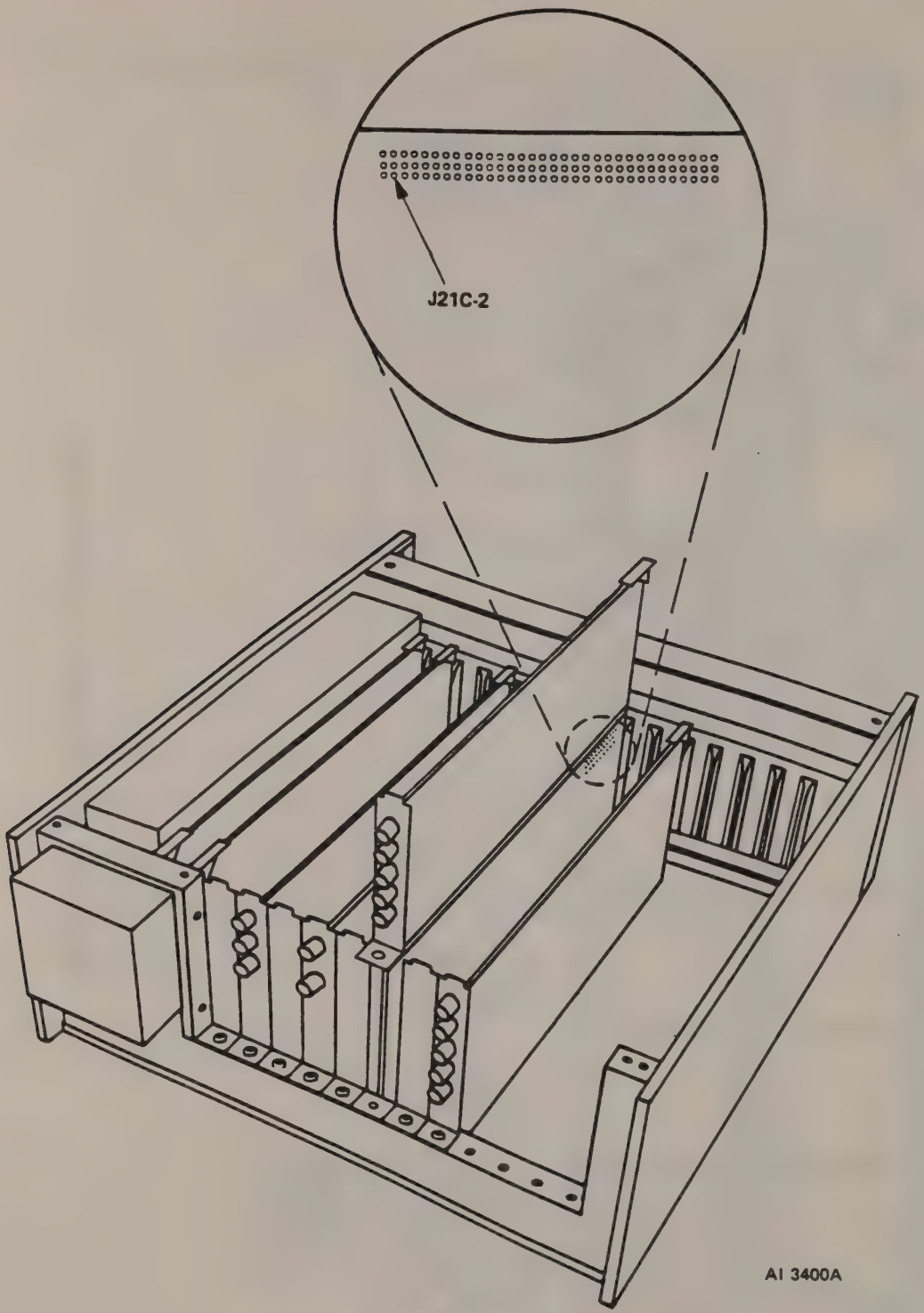

Figure 3.84. DS3 Two-point Card Supply Voltages

Let's take the case where your indication is Loss Of Signal.

ALARMS entry shows LOS.

Use oscilloscope to check output pin 11 of U17 for data pattern A.

No data pattern A at output pin 11 of U17. Check input pin 23 of U17 for data pattern A.

IMPORTANT NOTE

WHEN YOU MUST REPLACE U17... Several times in this procedure, you may replace U17. When you do, and before you go to the next step, you must calibrate the circuit with **Step Five. ONLY WHEN YOU REPLACE U17.**

Data pattern A at input pin 23 of U17. Replace U17.

Data pattern A not at input pin 23 of U17. Check input to relay K2, pin 10 for data pattern A.

Data pattern A is at pin 10 of relay K2. Type **LEVEL 4-TX2 DSX-LOW<CR>**. Check pin 3 of relay K2 for data pattern A.

No data pattern A at pin 3 of K2. Check base of Q5 for data pattern A.

No data pattern A at base of Q5. Replace Q5 and type **LEVEL DSX-HIGH<CR>**. Check pin 3 of relay K2 for data pattern A.

No data pattern A at pin 3 of K2. Replace K2.

Data pattern A is at output pin 11 of U17. With oscilloscope, check output of U17 at pin 30 for TTL clock pulse at 44.736 MHz.

There are three possibilities: There is no TTL clock pulse at pin 30 of U17, there is a TTL clock pulse at the correct frequency, or there is a TTL clock pulse there but the frequency is wrong.

IMPORTANT NOTE

WHEN YOU MUST REPLACE U17... Several times in this procedure, you may replace U17. When you do, and before you go to the next step, you must calibrate the circuit with **Step Five. ONLY WHEN YOU REPLACE U17.**

No TTL clock pulse at pin 30 of U17. Replace U17.

TTL clock pulse at 44.736 MHz is at pin 30 of U17. Check for +5 volts dc at pin 28 of U17.

IMPORTANT NOTE

WHEN YOU MUST REPLACE U17... Several times in this procedure, you may replace U17. When you do, and before you go to the next step, you must calibrate the circuit with **Step Five. ONLY WHEN YOU REPLACE U17.**

-5 volts at pin 28 of U17. Replace U17.

+5 volts dc at pin 28 of U17. Check U14 pin 12 for a logic zero (< +0.4 volts).

Pin 12 of U14 has a logic zero. Replace U6. Check output of U14 at pin 58 for a 50-millisecond square wave.

Square wave at pin 58 of U14. Replace U14.

No square wave at pin 58 of U14. Check input of buffer U22, pin 9.

Square wave at pin 9 of U22. Replace U22.

No square wave at pin 9 of U22. Run Diagnostic Test, Section 3.3.18.

TTL clock pulse is at pin 30 of U17 but not at 44.736 MHz. Set up DS3 Clock Recovery.

1. Connect frequency counter to TP2. Jumper pins 1 and 2 of J10 and adjust R85 for a frequency reading of 45.x MHz.
2. Short pin 6 of U17 to -5.2 volts(pin 8); frequency is 38 MHz.

   Frequency is greater than 38 MHz. Replace U8.

   Frequency 38 MHz or less. Go to next step in this procedure.
3. Remove short from pin 6 and 8 of U17. Adjust R85 for a frequency of 47 MHz.
4. Jumper pins 1 and 2 of J10. Set DS3 transmitter by typing **PATTERN 1111.** Frequency shows 44.736 MHz. (Signals are phase locked.)
5. Adjust R85 to set voltage at pin 3 of U17 to 0 volts ± 0.25 volts.
6. Spray U17 with Freeze-mist (loop may break lock) and then warm U17 to 40° C. You should see no errors nor lose the signal.

Frequency is not 44.736 MHz (clock does not lock to 44.736 MHz). Check U14, pin 12 for a logic high.

Pin 12 of U14 is not at a logic high. Check U6, pin 7 for +5 volts.

Pin 7 of U6 is not +5 volts. Check U6, pin 5 to be more negative than U6, pin 6.

Pin 5 of U6 is more negative than pin 6 of U6. Replace U17.

Pin 12 of U14 is at a logic high. Set oscilloscope on 1-volt scale, and check pin 6 of U17 for a triangular sweep wave going above and below zero.

Triangular wave on pin 6 of U17. Replace U17.

No triangular wave on pin 6 of U17. Check U16, pin 1 for triangular wave.

No triangular wave on pin 1 of U16. Check U26, pin 8 for 100-millisecond square wave.

No square wave at pin 8 of U26. Check U16, pin 1 for square wave.

Square wave is at pin 1 of U16. Replace U16.

Square wave is not at pin 1 of U16. Check pin 9 of U16. Replace U17.

Triangular wave is on pin 1 of U16. Replace Q1.

Let's review. You still have an ALARMS entry on the STATUS screen even though we have an external DS3 signal applied. U17 is good, and so are the components associated with it. This should take care of the LOS problem.

Step Two: Type **ADDR 9-RX2<CR> STATUS<CR>.**

ALARMS entry shows OOF.

Check to see if framing is on. Here's how you do that.

1. Type **FRAME 4-TX2 M13 <CR>.**
2. Type **ADDR 9-RX2<CR> STATUS<CR>.**

   ALARMS entry still shows OOF. Check that U14 is decoding properly.
3. Type **FRAME 4-TX2 M13 <CR>.**

4. Type **ADDR 9-RX2<CR> STATUS<CR>.**

ALARMS entry still shows OOF. With oscilloscope, check pin 55 on U14 for an all 1s data with an occasional (zero) framing bit. The pulse looks like Figure 3.85.

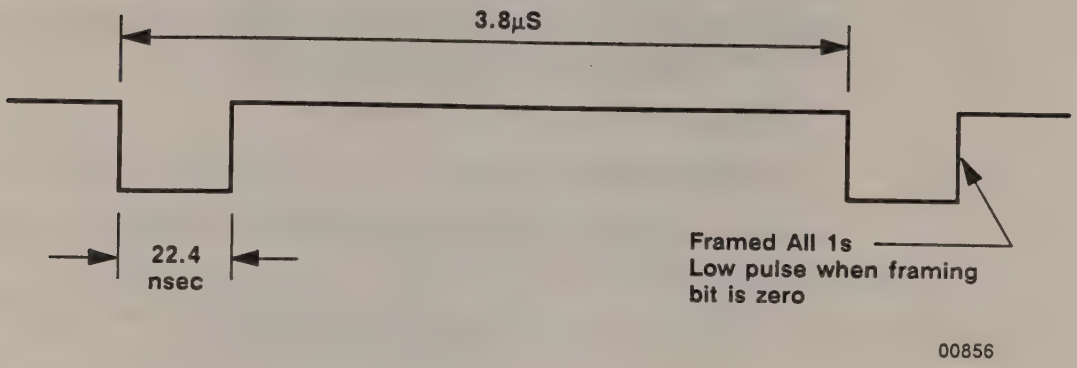

Figure 3.85. All Ones Data with Framing Bit

Data with framing bit is at pin 55 of U14. Replace U13 and type **STATUS<CR>.**

ALARMS entry shows CLEAR. Go to **Step Four:** Check Frequency.

No data with framing bit at pin 55 of U14. Replace U14 and type **STATUS<CR>.**

ALARMS entry shows CLEAR. Go to **Step Four:** Check Frequency.

ALARMS entry shows LOP. Replace U12 and type **STATUS<CR>.**

ALARMS entry shows CLEAR. Go to **Step Four:** Check Frequency.

ALARMS entry still shows LOP. Replace U13.

Step Three: Check **BLUE** Pattern.

Type **PATTERN 4-TX2 BLUE<CR> STATUS 9-RX2 <CR>.**

ALARMS entry shows CLEAR. Go to **Step Four:** Check Frequency.

ALARMS entry shows BLUE. Take two-point card off card extender, plug into mothercard, reassemble analyzer and repeat procedures of Section 3.2, making sure you check all transmitters with all receivers.

Step Four: Check Frequency.

Type **ADDR 9-RX2<CR> STATUS<CR>**. Frequency entry shows, for example, "Freq.(44.73642)... +9ppm", which means the DS3 frequency is 44.73642 MHz, which is 9 parts per million high.

Screen shows "Freq.(44.736...)...". DS3 output frequency is good. Remove card extender, plug two-point card back into mothercard, and replace analyzer top. Turn on analyzer and repeat procedures in Section 3.2 that apply to this card.

Screen shows "Freq.(n/a)". With oscilloscope, check pulse on pin 11 of U17 for a square wave TTL at 6.176 MHz.

No clock pulse at pin 11 of U17. Check pin 7 of connector J21B for clock pulse.

Clock pulse at pin 7 of J21B. Replace U24.

Clock pulse is not at pin 7 of J21B. Check Mothercard, Section 3.3.19.

Clock pulse at pin 11 of U17. Check pin 13 of U17 for 50-millisecond latch signal.

IMPORTANT NOTE

WHEN YOU MUST REPLACE U17... Several times in this procedure, you may replace U17. When you do, and before you go to the next step, you must calibrate the circuit with **Step Five. ONLY WHEN YOU REPLACE U17.**

Latch signal is at pin 13 of U17. Replace U17 and check pin 13 again.

No latch signal at pin 13 of U17. Run Diagnostic Test, Section 3.3.18.

Step Five: How To Calibrate The DS3 Circuit.

1. Connect frequency counter to TP2 and jumper pins 2 and 3 of J10. Adjust R85 for a frequency of 45.x MHz.
2. Short pin 6 of U17 to -5.2 volts (pin 8); frequency should be 38 MHz.

   Frequency is greater than 38 MHz. Replace U17 and start procedure over.

   Frequency is 38 MHz or less. Go to next step in this procedure.
3. Remove short between pins 6 and 8 of U17 and adjust R85 for a frequency of 47 MHz.

4. Jumper pins 1 and 2 on J10. Type **PATTERN 4-TX2 1111<CR>.** Frequency is 44.736 MHz (signals are phase locked).

5. Adjust R85 until voltage at pin 3 of U17 is 0 volts ± 0.25 volts. Spray U17 with Freeze-mist then warm U17 to 40 ° C. (Signal may break lock.) You should not lose signal or see any errors.

6. Type **LEVEL 4-TX2 HI<CR>.** Connect the full length of DTA/DAS long test cable (Scientific-Atlanta part number 306159) from DS3 TX2 to DS3 RX.

7. Type **LEVEL 9-RX2 DSX-LOW<CR>.**

8. Connect digital voltmeter to the junction of R21, C6 and ground. Remove jumper from J10 and adjust R98 for a voltage between 100 and 105 millivolts.

9. Jumper pins 1 and 2 on J10. Frequency is 44.736 MHz and voltage is less than -225 millivolts.

10. Replace long cable with a short one. Type **LEVEL LOW<CR>.** Frequency stays at 44.736 and voltage stays below -225 millivolts.

11. Type **LEVEL 4-TX2 LOW<CR>PATTERN BLUE<CR>.** Frequency stays at 44.736 and voltage stays below -225 millivolts.

    Voltage is above -225 millivolts. Adjust R37 until voltage is between -225 millivolts and -255 millivolts.

12. Remove jumper from J10. Voltage is more than +50 millivolts.

    Voltage is between +30 millivolts and +50 millivolts. Adjust R98 until voltage is more than +50 millivolts.

13. Jumper pins 1 and 2 on J10. Voltage is less than -225 millivolts.

14. Type **LEVEL 4-TX2 DSX<CR>FRAMING M13<CR>PATTERN PRBS-15<CR>.** Remove R84 and connect a test circuit to the ASIC like this:

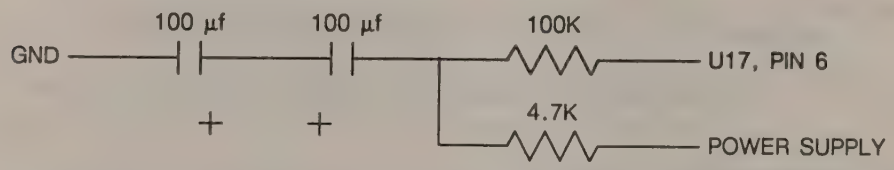

    Make sure the lead from pin 6 of U17 to the resistors is less than 6 inches. Type **RUN <CR>** to start the test.

15. Type **SUMMARY 9-RX2 <CR>.** Connect 10 volts dc power supply to the test circuit and set to zero volts.

NOTE

In the next two steps, using the DS3 MEASUREMENTS screen, watch **BOTH** error seconds and total bit errors. When the error rate is high, error seconds may change but total bit errors may not.

When you can't get a zero error rate at a positive voltage (step 15), adjust the voltage to the smallest negative voltage that just begins to produce errors.

When you can't get a zero error rate at a negative voltage (step 16), adjust the voltage to the smallest positive voltage that just begins to produce errors.

16. Adjust voltage toward +10 volts until errors start and then carefully adjust voltage toward zero until errors just stop. **Write down this voltage, including its sign. You'll need it later. This is V1.**

17. Set test voltage back to zero, then adjust it toward -10 volts until errors start, then adjust voltage toward zero until errors stop. **Write down this voltage, including its sign. This is V2.** Type **STOP <CR>** to stop the test.

18. Calculate V3 = V1 + V2.

    V3 is between +0.5 volts and -0.5 volts. Calibration is correct. Go to step 22.

    V3 is more than +0.5 or less than -0.5 volts. Go to step 19 in this procedure.

19. Choose offset correction resistor from Resistor Table that corresponds to the value of V3 calculated in step 18. Connect it between -5.2 volts (U17, pin 8 and U17, pin 6).

20. Repeat steps 16, 17, and 18.

    V3 is between -0.5 volts and +0.5 volts. Install correction resistor as R84 and go to step 20.

    V3 is less than -0.5 volts or more than +0.5 volts. Take the correction resistor off and repeat procedure, starting with step 15.

21. Repeat steps 13 through 19.

22. Run a one minute test by typing **TIMER 9-RX2 00:01:00<CR>RUN<CR>SUMMARY<CR>.** Verify there are no errors. Type **STOP <CR>** to stop the test.

23. Type **LEVEL DSX-LOW<CR>** then type **LEVEL 4-TX2 DSX<CR>** then type **TIMER 9-RX2 00:01:00<CR>RUN<CR>SUMMARY<CR>** and verify there are no errors. Type **STOP <CR>** to stop the test.

24. Type **LEVEL 4-TX2 LOW<CR>** then type **TIMER 9-RX2 00:01:00<CR>RUN<CR>SUMMARY<CR>** and verify there are no errors.

25. Disconnect and reconnect test cable and verify that frequency is 44.736 MHz.

26. Type **LEVEL 4-TX2 DSX-MON<CR>** and verify frequency is 44.736 MHz.

27. Type **LEVEL DSX<CR>.** Connect transmitter to receiver through a 26 dB pad. Type **TIMER 9-RX2 00:01:00<CR>RUN<CR>SUMMARY<CR>** and verify there are no errors. Type **STOP <CR>** to stop the test.

RESISTOR TABLE
(R in Kilohms, V3 in volts)

	V3			V3			V3	
R	**max**	**min**	**R**	**max**	**min**	**R**	**max**	**min**
2210	0.58	0.50	487	2.16	2.11	226	4.65	4.54
1500	0.77	0.58	475	2.22	2.16	221	4.77	4.65
1240	0.86	0.77	464	2.30	2.22	215	4.77	4.77
1180	0.91	0.86	442	2.41	2.30	205	5.14	4.96
1100	0.99	0.91	422	2.53	2.41	200	5.25	5.14
1000	1.07	0.99	402	2.62	2.53	196	5.43	5.25
953	1.12	1.07	392	2.68	2.62	187	5.64	5.43
909	1.17	1.12	383	2.78	2.68	182	5.78	5.64
866	1.23	1.17	365	2.92	2.78	178	6.00	5.78
825	1.29	1.23	348	3.06	2.92	169	6.29	6.00
787	1.35	1.29	332	3.21	3.06	162	6.59	6.29
750	1.42	1.35	316	3.37	3.21	154	6.84	6.59
715	1.49	1.42	301	3.50	3.37	150	7.00	6.84
681	1.56	1.49	294	3.58	3.50	147	7.25	7.00
649	1.64	1.56	287	3.71	3.58	140	7.62	7.25
619	1.72	1.64	274	3.89	3.71	133	8.00	7.62
590	1.81	1.72	261	4.03	3.89	127	8.39	8.00
562	1.87	1.81	255	4.13	4.03	121	8.82	8.39
549	1.92	1.87	249	4.23	4.13	115	9.12	8.82
536	1.99	1.92	243	4.33	4.23	113	9.33	9.12
511	2.06	1.99	237	4.44	4.33	110	9.68	9.33
499	2.11	2.06	232	4.54	4.44	105	10.15	9.68

28. Replace 26 dB pad with standard signal cable. Type **RUN <CR>, ERRORS 4-TX2 BURST 10MS<CR>.** Then verify errors have been detected by typing **SUMMARY 9-RX2<CR>.** Verify errors are detected. Type **STOP <CR>** to stop the test.

This is all you can do with the DS3 two-point Channel 2 receiver.

3.3.15 DS1 Two-point Receiver Channel 1

NOTE

Here is a list of replacement components on the DS1 two-point card that are only available from Scientific-Atlanta.

Reference Designator	Scientific-Atlanta Part Number
U4	327878
U5	327877
U6	327876
U8	327875
U14	327878
U15	327877
U16	327876
U18	327875
U25	456215
U26	456213
U27	456227
U31	456216
U34, U35	Refer to Scientific-Atlanta for current number

The DS1 two-point receiver has two diagnostic LEDs for each channel on the top edge. Here's what these LEDs indicate for Channel 1 receiver.

	Definition	Abbreviation	Reference Designator	STATUS Screen ALARMS Entry
DS1	Loss of Pattern	1PL	DS2	LOP
DS1	Out of Frame	1FL	DS4	OOF

The LEDs give hardware status. The CRT screen gives software status. Occasionally, it is convenient to compare readings to help isolate problems.

NOTE

This procedure is for a DS1 channel 1 receiver on a two-point card in slot 11 and a good DS1 transmitter card in slot 4.

In this procedure you will be asked to check for data pattern A. Here's how you get data pattern A.

1. Connect DS1-TX1 in slot 4 to DS1-RX1 in slot 11.

2. Type **ADDR 4-TX1<CR>**. Then type **SETUP<CR>**. What you want to see is Figure 3.86 with the CLOCK entry INTERNAL. Change CLOCK entry, if you need to, by typing **CLOCK INTERNAL<CR>**.

```
REMOTE>addr 4-TX1

REMOTE (4-TX1)>setup

                Channel   :  DS1 4-TX1
              Tx Output   :  ON
                   Code   :  AMI
                  Frame   :  SF
                Pattern   :  PRBS-20

          Loopback (esf)  :   OFF
          Loopcode (esf)  :   CSU-LINE
          Loopback (sf)   :   OFF
          Loopcode (sf)   :   CSU-LINE

                 Yellow   :  OFF
                  Clock   :  INTERNAL
               Tx-Busy    :  OFF

                 Errors   :  Pattern: BIT    Frame: FBIT    Coding: BPV
```

02863

Figure 3.86. DS1 Two-point Transmitter Setup Screen

3. Type **PATTERN 1010<CR>**. These entries will produce data pattern A, see Figure 3.87.

4. Put the DS1 two-point card on the Scientific-Atlanta card extender.

5. Have the two-point receiver schematic handy and refer to Figure 3.88 to locate components.

Step One: Type **STATUS 11-RX1<CR>.**

NOTE

The STATUS screen shows a hierarchy of failures; LOS, OOF then LOP, e.g., Loss Of Signal, Out Of Frame and then Loss Of Pattern. Or, to put it another way, you can't solve an LOP problem until you have framing, and you can't solve a framing problem until you have a signal.

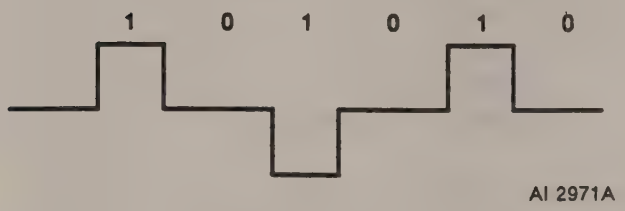

Figure 3.87. Data Pattern A, 1010

Let's take the case where your indication is Loss Of Signal.

ALARMS entry shows LOS. LOS (Loss Of Signal) indicates potential trouble in two areas: Either the clock recovery signal is not phase-locked with the input signal, or there is no input signal at all.

Use oscilloscope to check for data pattern A at pin 11 of U8.

No data pattern A at output pin 11 of U8. Check input pin 23 of U8 for data pattern A.

IMPORTANT NOTE

WHEN YOU MUST REPLACE U8... Several times in this procedure you may need to replace U8. When you do, and before you go to the next step, you must calibrate the DS1 circuit, see **Step Six. BUT ONLY WHEN YOU REPLACE U8.**

Data pattern A at input pin 23 of U8. Replace U8.

Data pattern A not at pin 23 of U8. Check cable at connection J6 and input. Check input to transformer T2, pin 3, for data pattern A.

Data pattern A is at pin 3 of transformer T2. Replace T2.

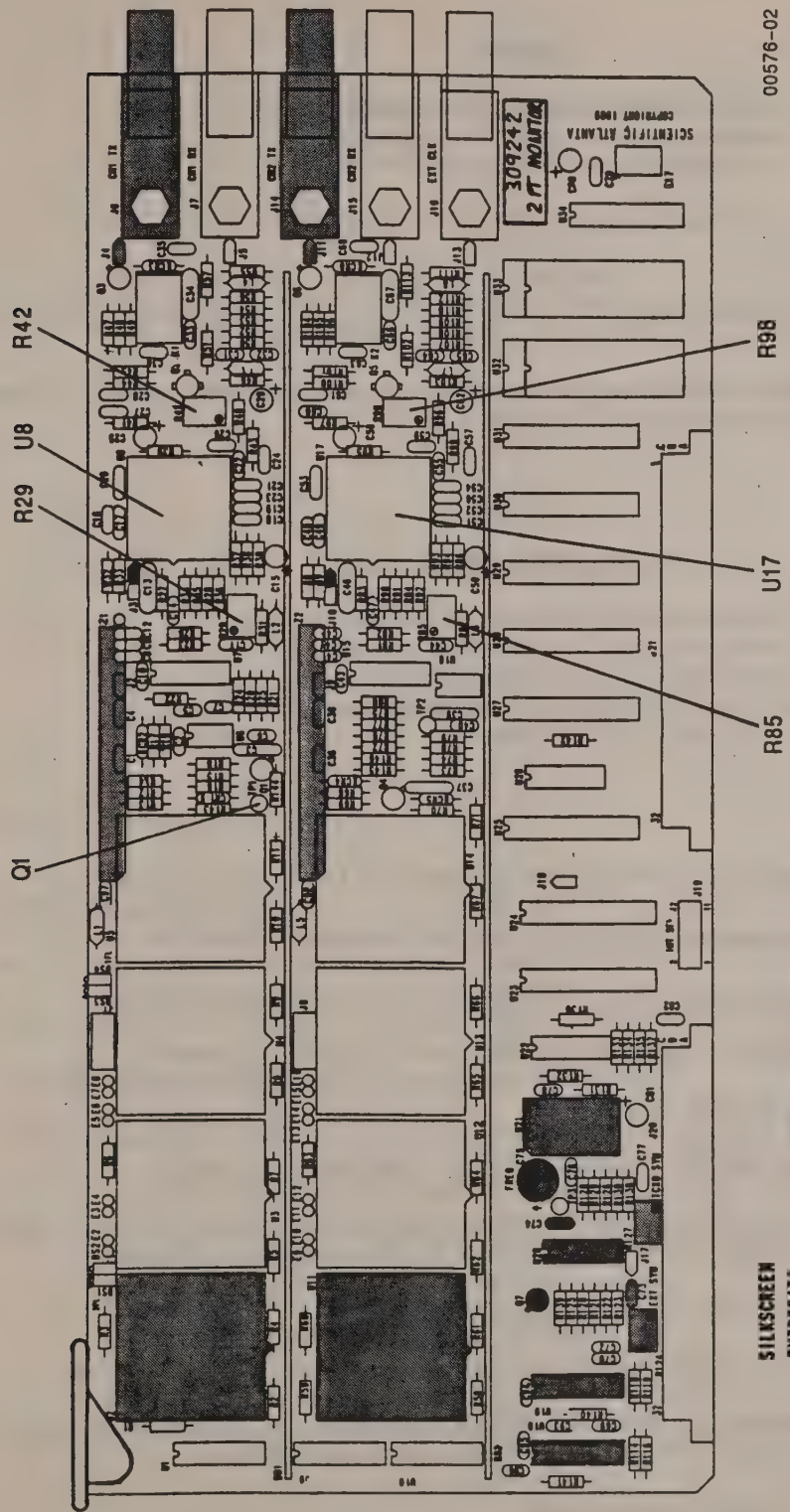

Figure 3.88. DS1 Two-point Card Components

NOTE

A TTL clock pulse is a logic one if the voltage is between 0 and +0.8 volts. It is a logic zero when the voltage is between +2.4 and +5.2 volts.

Data pattern A is at output pin 11 of U8. With oscilloscope check for TTL clock pulse, 1.544 MHz, at U8, pin 30.

There are three possibilities; the TTL clock pulse is not there, the TTL clock pulse is there at 1.544 MHz, or the TTL clock pulse is there but not at 1.544 MHz.

IMPORTANT NOTE

WHEN YOU MUST REPLACE U8... Several times in this procedure you may need to replace U8. When you do, and before you go to the next step, you must calibrate the DS1 circuit, see **Step Six. BUT ONLY WHEN REPLACE U8.**

No TTL clock pulse at pin 30 of U8. Replace U8. Recheck for TTL clock pulse at pin 30 of U8.

Still no TTL clock pulse at pin 30 of U8. Check pin 5 of U8 for +5 volts ±5%.

No voltage at pin 5 of U8. Check R33 and L1 for short or open circuits.

TTL clock pulse at 1.544 MHz is at pin 30 of U8. Check pin 28 of U8 for +5 volts dc.

-5 volts dc at pin 28 of U8. Replace U8.

+5 volts dc at pin 28 of U8. Check U6, pin 20 for a logic high (> +2.4 volts).

Pin 20 of U6 has logic high. Verify phase lock by checking pin 12 of U6 for logic low (< +0.8 volts).

Pin 12 of U6 has logic low. Replace U6.

TTL clock pulse is at pin 30 of U8 but not at 1.544 MHz. On pin 12 of U6, check for logic low.

Pin 12 of U6 has logic low. Replace U6 and then adjust phase lock. Here's how you do that.

(1) Connect frequency counter to TP1.

CAUTION

Skipping step (2) may damage the card.

(2) With no signal applied, remove jumper from J2 and put it on J21.

(3) Adjust R30 for a frequency of 1.54x MHz.

(4) Move jumper from J21 to J22 and adjust R27 for a frequency of 1.44x MHz.

(5) Repeat steps (2), (3) and (4) until you get the correct frequencies.

CAUTION

Skipping step (6) may damage the card.

(6) Remove jumpers from J21 and J22 and jumper pins 2 and 3 of J2. Spray U8 with Freeze-mist (frequency may drift) and then warm U8 to 40° C. You should have no signal loss or errors.

Step Two: Type **STATUS<CR>**.

ALARMS entry shows OOF.

Check to see if framing is on. Here's how you do that.

Type **SETUP 4-TX1 <CR> FRAME CPAR<CR> ADDR 11-RX1<CR> STATUS<CR>.**

ALARMS entry still shows OOF. There are two possibilities.

The first possibility is that U6 is not decoding properly. Check that first.

Type **SETUP 4-TX1<CR>FRAME 1111<CR>ADDR 11-RX1<CR>STATUS<CR>.**

ALARMS entry shows OOF. With oscilloscope, check pin 55 of U6 for an all 1s pulse with an occasional (zero) framing bit. It looks like Figure 3.89.

Data with framing bit is at pin 55 of U6. Replace U5.

No data at pin 55 of U6. Replace U6. Type **STATUS<CR>**.

ALARMS entry shows CLEAR. Go to **Step Five:** Check Frequency.

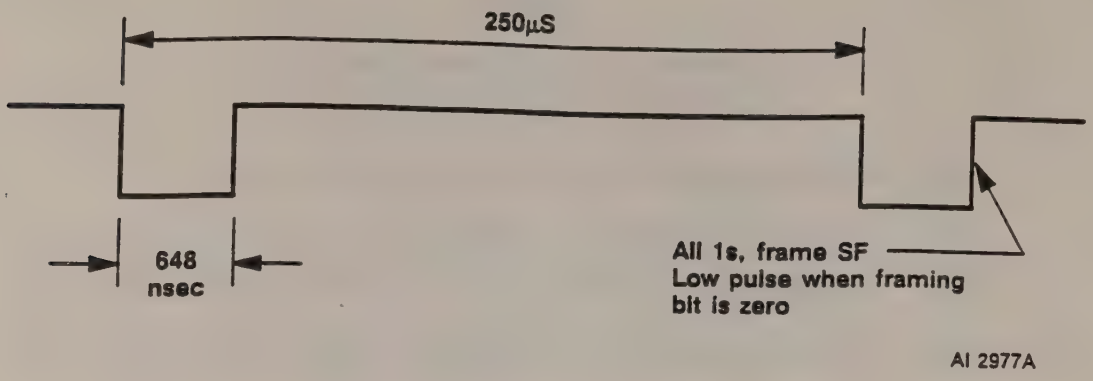

Figure 3.89. All Ones Data with Framing Bits

ALARMS entry still shows OOF. This is all you can do to check if framing is on.

The second possibility is that you don't have phase lock. Here's how you check that.

Check pin 30 of U8 for TTL clock pulse at 1.544 MHz.

TTL clock pulse is at pin 30 of U8, but not at 1.544 MHz. Adjust phase lock.

(1) Connect frequency counter to TP1.

CAUTION

Skipping step (2) may damage the card.

(2) With no signal applied, remove jumper from J2 and put it on J21.

(3) Adjust R30 for a frequency of 1.54x MHz.

(4) Move jumper from J21 to J22 and adjust R27 for a frequency of 1.44x MHz.

(5) Repeat steps (2), (3) and (4) until you get the correct frequencies.

CAUTION

Skipping step (6) may damage the card.

(6) Remove jumpers from J21 and J22 and jumper pins 2 and 3 of J2. Spray U8 with Freeze-mist (frequency may drift) and then warm U8 to 40° C. You should have no signal loss or errors.

Step Three: Type **STATUS<CR>**.

ALARMS entry shows LOP. Replace U4. Type **STATUS<CR>**.

ALARMS entry shows CLEAR. Go to **Step Five:** Check Frequency.

ALARMS entry shows LOP. Replace U5.

Step Four: Type **STATUS<CR>**.

ALARMS entry shows AIS.

1. Type **ADDR 4-TX1<CR>**. Then type **SETUP<CR>**. What you want to see is Figure 3.86 with the CLOCK entry INTERNAL. Change CLOCK entry, if you need to, by typing **CLOCK INTERNAL<CR>**. The screen won't change until you type **SETUP<CR>**.

2. Type **PATTERN 1111<CR>**. These entries will produce data pattern A, see Figure 3.90. Use oscilloscope to check pin 11 of U8 for data pattern A.

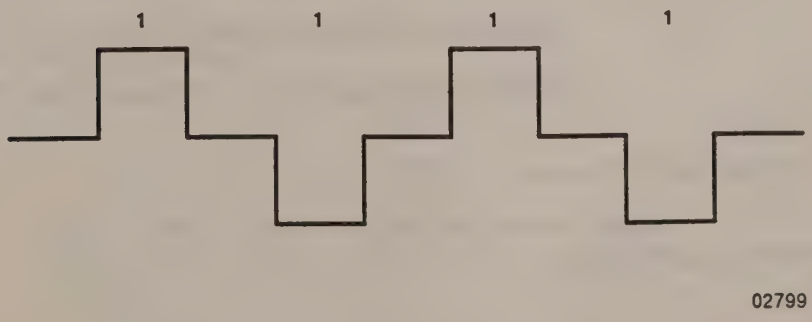

Figure 3.90. Data Pattern A, 1111

3. Type **ADDR 11-RX1<CR> STATUS<CR>.**

ALARMS entry shows CLEAR. Put two-point card back in analyzer, reassemble analyzer, and repeat Section 3.2, making sure to check all transmitters against all receivers.

Step Five: Check Frequency.

Type **ADDR 11-RX1<CR> STATUS<CR>**. The status screen should show, for example, "__Freq.(1.544002) +1ppm", which means the DS1 output frequency is 1.544002 MHz.

DS1 input signal frequency is 1.544 MHz. Remove card extender, plug two-point card back into mothercard, and reassemble analyzer. Turn on the analyzer and repeat procedures in Section 3.2, making sure you check all transmitters against all receivers.

No DS1 frequency measurement, screen shows "Freq.(n/a)". With oscilloscope check signal on pin 11 of U1 and U2 for a square wave at TTL level.

No TTL square wave at pin 11 of U2. Check pin 7 of connector J18B.

Square wave is at pin 7 of J18B. Replace U26.

Square wave is not at pin 7 of J18B. Check mothercard, Section 3.3.19.

Square wave is at pin 11 of U1 and U2. Check pin 13 of U1 and U2 for clock pulse, TTL level 162 nanoseconds wide, 50 milliseconds apart.

Clock pulse is at pin 13 of U2. Replace U2 and, if necessary, U1.

No clock pulse at pin 13 of U2. Replace U26 and, if necessary, U6.

Still no clock pulse at pin 13 of U2. Check for 50-millisecond latch signal at pin 58 of U6.

No clock pulse at pin 58 of U6. Check pin 27 of J18B for 50-millisecond latch signal.

Clock pulse at pin 27 of J18B. Replace buffer U24.

No clock pulse at pin 27 of J2B. Run diagnostic test, Section 3.3.18.

Step Six: How To Calibrate DS1 Receiver.

1. Connect frequency counter to TP1.

CAUTION

Skipping step (2) may damage the card.

2. With no signal applied, remove jumper from J2 and jumper J21.

3. Adjust R30 for a frequency of 1.54x MHz.

4. Move jumper from J21 to J22 and adjust R27 for a frequency of 1.44x MHz.

5. Repeat steps 2, 3 and 4 until you get the correct frequencies.

CAUTION

Skipping step (6) may damage the card.

6. Remove jumpers from J21 and J22 and jumper pins 2 and 3 of J2. Spray U8 with Freeze-mist (frequency may drift) and then warm U8 to 40° C. Check errors by typing **REP 11-RX1 REM REF 00:00:01 RUN <CR>.** Verify no LOS or errors. Type **STOP <CR>.**

7. Remove signal cable, and then reconnect. Frequency is 1.54 MHz.

8. Set DS1 transmitter by typing **FRAME 4-TX1 SF <CR>CODE AMI<CR> PATTERN 3IN24<CR>.** Frequency stays at 1.54 MHz.

9. Disconnect and reconnect signal cable ten times and verify lockup (frequency stays the same.)

10. Change DS1 transmitter by typing **PATTERN 1-7<CR>.** Disconnect and reconnect signal cable several times and verify lockup (frequency stays the same).

11. Change transmitter by typing **CODE B8ZS<CR>FRAME PRBS-23<CR>.** Type **REP 11-RX1 REM REF 00:01:00, RUN <CR>** and verify the lockup (frequency stays the same). Type **STOP <CR>.**

12. Replace signal cable with 27 dB cable and run one-minute test and verify no errors.

Step Seven: How to Check Signaling Bits

NOTE

When the signaling bit pattern is incorrect, replace U15.

1. Connect DS1 transmitter output to DS1 transmitter input. Set the DS1 transmitter like this: Type **FRAME 4-TX1 SF<CR>CODE B8ZS<CR>PATTERN PRBS 20<CR>.**

2. Use the receiver card address and type **SIGNALING 11-RX1**. Figure 3.91 shows the signaling bit pattern for a prbs pattern. (There are no C or D bits for SF framing.)

```
                          DS1 Error Rate Test                    ALARMS CLEAR
-------------------------------------------------------------------------------
01:01:05  01/01   SA AT 9000 ATLANTA GA     Slot 2 RX2 DS1          Mode:  SF B8ZS
END OF TEST RESULTS                         Timer: 00:00:03         Pattern:PRBS20
-------------------------------------------------------------------------------
                          DS1 Signaling Status
          1-6                 7-12                13-18                19-24
        ------              ------              ------              ------
A   ? ? ? ? ? ?     ? ? ? ? ? ?     ? ? ? ? ? ?     ? ? ? ? ? ?
B   ? ? ? ? ? ?     ? ? ? ? ? ?     ? ? ? ? ? ?     ? ? ? ? ? ?
C   x x x x x x     x x x x x x     x x x x x x     x x x x x x
D   x x x x x x     x x x x x x     x x x x x x     x x x x x x
```

00853

Figure 3.91. PRBS Signaling Bit Pattern

3. Change the DS1 transmitter settings by typing **FRAME 4-TX1 SF <CR>CODE B8ZS<CR>PATTERN 1111.** Then type **SIGNALING 11-RX1.** Figure 3.92 shows you the signaling bit pattern with all 1s.

```
                          DS1 Error Rate Test                    ALARMS CLEAR
-------------------------------------------------------------------------------
01:01:05  01/01   SA AT 9000 ATLANTA GA     Slot 2 RX2 DS1          Mode:  SF B8ZS
END OF TEST RESULTS                         Timer: 00:00:03         Pattern:ALL 1S
-------------------------------------------------------------------------------
                          DS0 Signaling Status
          1-6                 7-12                13-18                19-24
        ------              ------              ------              ------
A   1 1 1 1 1 1     1 1 1 1 1 1     1 1 1 1 1 1     1 1 1 1 1 1
B   1 1 1 1 1 1     1 1 1 1 1 1     1 1 1 1 1 1     1 1 1 1 1 1
C   x x x x x x     x x x x x x     x x x x x x     x x x x x x
D   x x x x x x     x x x x x x     x x x x x x     x x x x x x
```

00854

Figure 3.92. All Ones Signaling Bit Pattern

4. Change the DS1 transmitter by typing **FRAME 4-TX1 <CR>CODE B8ZS<CR>PATTERN 0000.** Then type **SIGNALING 11-RX1.** Figure 3.93 shows you the signaling bits pattern with all 0s.

```
                              DS1 Error Rate Test                ALARMS CLEAR
-------------------------------------------------------------------------------
01:01:05  01/01   SA AT 9000 ATLANTA GA     Slot 2 RX2 DS1        Mode:  SF B8ZS
END OF TEST RESULTS                         Timer: 00:00:03       Pattern:ALL 0S
-------------------------------------------------------------------------------
                              DS0 Signaling Status
          1-6                  7-12                 13-18                19-24
        ------               ------               ------               ------
A   0  0  0  0  0  0     0  0  0  0  0  0     0  0  0  0  0  0     0  0  0  0  0  0
B   0  0  0  0  0  0     0  0  0  0  0  0     0  0  0  0  0  0     0  0  0  0  0  0
C   x  x  x  x  x  x     x  x  x  x  x  x     x  x  x  x  x  x     x  x  x  x  x  x
D   x  x  x  x  x  x     x  x  x  x  x  x     x  x  x  x  x  x     x  x  x  x  x  x

                                                                          00855
```

Figure 3.93. All Zeros Signaling Bits

This is all you can do to the DS1 two-point Channel 1 receiver.

3.3.16 DS1 Two-point Card, Channel 2 Receiver

IMPORTANT NOTE

WHEN YOU MUST REPLACE U18... Several times in this procedure you may need to replace U18. When you do, before you go to the next step, calibrate the DS1 circuit, using **Step Six. BUT ONLY WHEN YOU REPLACE U18.**

NOTE

Replacements for some components on the DS1 Two-point card are only available from Scientific-Atlanta. They're listed in Chapter 4, Parts List, but they're also listed here for your convenience.

Reference Designator	Scientific-Atlanta Part Number
U4	327878
U5	457040
U6	327876
U8	458327
U13	457040
U14	327878
U15	457040
U16	327876
U18	458327
U25	456215
U26	456213
U27	456214
U31	456216
U34, U35	Refer to Scientific-Atlanta for current number
Z1	327944
Z2	327944

NOTE

This procedure is for a DS1 channel 2 receiver on a two-point card in slot 11 and a good DS1 transmitter card in slot 4. See Section 3.3.2.

The DS1 Two-point card has two diagnostic LEDs for each channel on the top edge. Here's what these LEDs indicate for Channel 2 receiver.

	Definition	Abbreviation	Reference Designator	STATUS Screen ALARMS Entry
DS1	Loss of Pattern	1PL	DS1	LOP
DS1	Out of Frame	1FL	DS3	OOF

The LEDs give hardware status. The CRT screen gives software status. Occasionally, it is convenient to compare readings to help isolate problems.

In this procedure you will be asked to check for data pattern A. Here's how you get data pattern A.

1. Connect DS1-TX2 in slot 4 to DS1-RX2 in slot 11.

2. Type **ADDR 4-TX2<CR>**. Then type **SETUP<CR>**. What you want to see is Figure 3.94 with the CLOCK entry INTERNAL. Change CLOCK entry, if you need to, by typing **CLOCK INTERNAL<CR>**. The screen won't change until you type **SETUP<CR>**.

```
REMOTE>addr 4-TX2

REMOTE (4-TX2)>setup

          Channel   :  DS1 4-TX2
             Code   :  AMI
            Frame   :  SF
          Pattern   :  PRBS-20

    Loopback (esf)  :  OFF
    Loopcode (esf)  :  CSU-LINE
    Loopback (sf)   :  OFF
    Loopcode (sf)   :  CSU-LINE

           Yellow   :  OFF
            Clock   :  INTERNAL
         Tx-Busy    :  OFF

           Errors   :  Pattern: BIT    Frame: FBIT    Coding: BPV
```

AI 3191A

Figure 3.94. DS1 Transmitter Setup Screen

3. Type **PATTERN 1010<CR>**. These entries will produce data pattern A, see Figure 3.95.

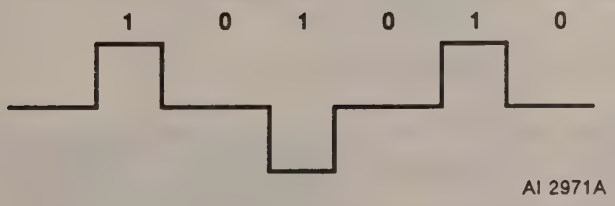

AI 2971A

Figure 3.95. Data Pattern A, 1010

4. Put the DS1 Two-point card on the Scientific-Atlanta card extender.

5. Have the Two-point card schematic handy and refer to Figure 3.96 to locate components.

Step One: Type **ADDR 11-RX2<CR> STATUS<CR>.**

NOTE

The STATUS screen shows a hierarchy of failures; LOS, OOF then LOP, e.g., Loss Of Signal, Out Of Frame and then Loss Of Pattern. Or, to put it another way, you can't solve an LOP problem until you have framing, and you can't solve a framing problem until you have a signal.

Let's take the case where your indication is Loss Of Signal.

ALARMS entry shows LOS. LOS (Loss Of Signal) indicates potential trouble in two areas: Either the clock recovery signal is not phase-locked with the input signal, or there is no input signal at all.

Use oscilloscope to check for data pattern A at pin 11 of U18.

No data pattern A at output pin 11 of U18. Check input pin 23 of U18 for data pattern A.

IMPORTANT NOTE

WHEN YOU MUST REPLACE U18... Several times in this procedures you may need to replace U18. When you do, before you go to the next step, calibrate the DS1 circuit **Step Six. BUT ONLY WHEN YOU REPLACE U18.**

Data pattern A at input pin 23 of U18. Replace U18.

No data pattern A at pin 23 of U18. Check cable at connection J12 and input. Check input to transformer T4, pin 3, for data pattern A.

Data pattern A is at pin 3 of transformer T4. Replace T4.

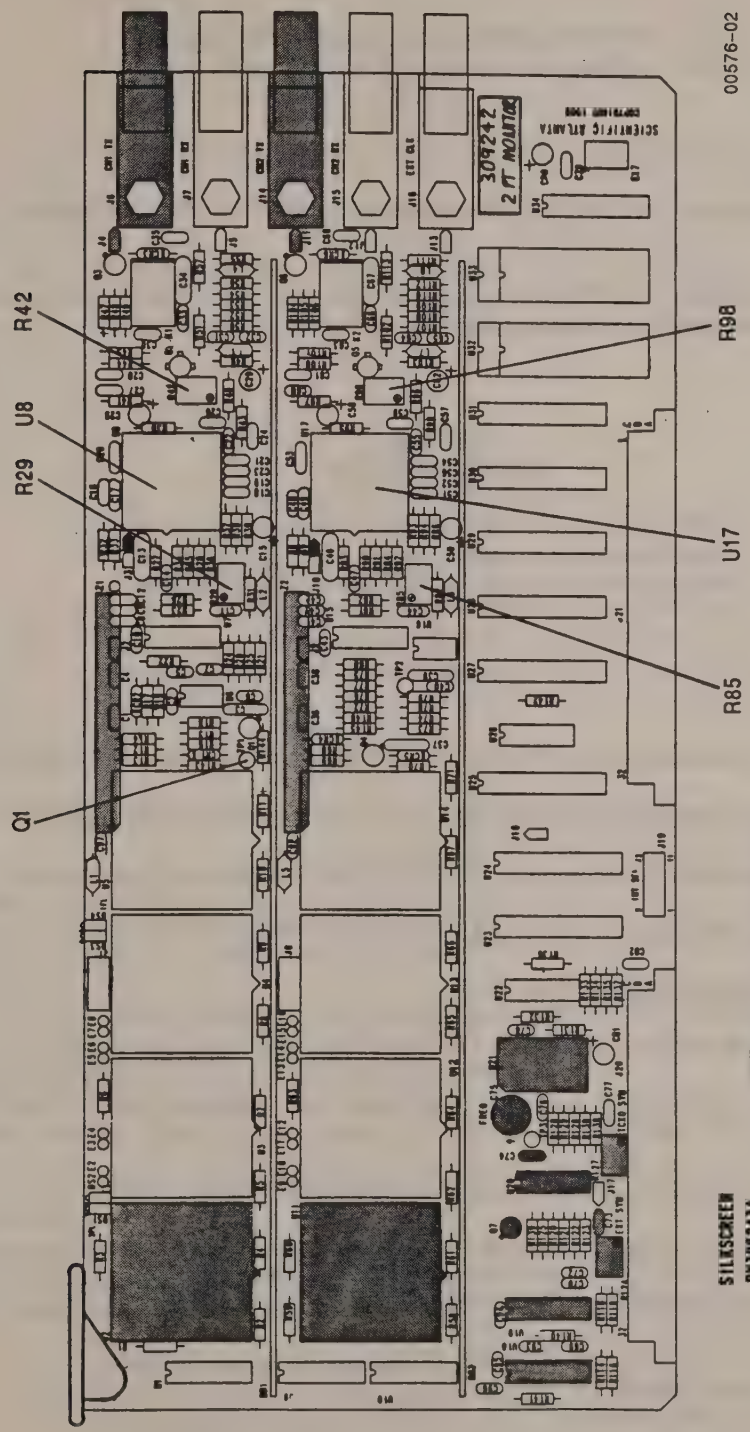

Figure 3.96. DS1 Two-point Card Components

NOTE

A standard TTL pulse is logic zero between 0 and +0.8 volts. Ii is logic one between +2.4 and +5.2 volts.

Data pattern A is at output pin 11 of U18. With oscilloscope check for TTL clock pulse, 1.544 MHz, at U18, pin 30.

There are three possibilities; the TTL clock pulse is not there, the TTL clock pulse is there at 1.544 MHz, or the TTL clock pulse is there but not at 1.544 MHz.

IMPORTANT NOTE

WHEN YOU MUST REPLACE U18... Several times in this procedures you may need to replace U18. When you do, before you go to the next step, calibrate the DS1 circuit **Step Six. BUT ONLY WHEN YOU REPLACE U18.**

No TTL clock pulse at pin 30 of U18. Replace U18. Recheck for TTL clock pulse at pin 30 of U18.

Still no TTL clock pulse at pin 30 of U18. Check pin 5 of U18 for +5 volts ±5%.

No voltage at pin 5 of U18. Check R79 and L4 for short or open circuits.

TTL clock pulse at 1.544 MHz is at pin 30 of U18. Check pin 28 of U18 for +5 volts dc.

-5 volts dc at pin 28 of U18. Replace U18.

+5 volts dc at pin 28 of U18. Check U16, pin 20 for a logic high (> +2.4 volts).

Pin 20 of U16 has logic high. Verify phase lock by checking pin 12 of U16 for logic low (< +0.8 volts).

Pin 12 of U16 has logic low. Replace U16.

TTL clock pulse is at pin 30 of U18 but not at 1.544 MHz. On pin 12 of U16, check for logic low.

Pin 12 of U16 has logic low. Replace U16 and then adjust phase lock. Here's how you do that.

(1) Connect frequency counter to TP2.

CAUTION

Skipping step (2) may damage the card.

(2) With no signal applied, remove jumper from J8 and put it on J23.

(3) Adjust R76 for a frequency of 1.54x MHz.

(4) Move jumper from J23 to J24 and adjust R73 for a frequency of 1.44x MHz.

(5) Repeat steps (2), (3) and (4) until you get the correct frequencies.

CAUTION

Skipping step (6) may damage the card.

(6) Remove jumpers from J23 and J24 and jumper pins 2 and 3 of J8. Spray U18 with Freeze-mist (frequency may drift) and then warm U18 to 40° C. You should have no signal loss or errors.

Step Two: Type **STATUS<CR>.**

ALARMS entry shows OOF.

Check to see if framing is on. Here's how you do that.

Type **ADDR 4-TX2<CR> SETUP<CR> FRAME CPAR<CR> ADDR 11-RX2<CR> STATUS<CR>.**

ALARMS entry still shows OOF. There are two possibilities.

The first possibility is that U16 is not decoding properly. Check that first.

Type **ADDR 4-TX2<CR>SETUP<CR> FRAME 1111<CR>ADDR 11-RX2<CR> STATUS<CR>.**

ALARMS entry shows OOF. With oscilloscope, check pin 55 of U16 for an all 1s pulse with an occasional (zero) framing bit. It looks like Figure 3.97.

Data with framing bit is at pin 55 of U16. Replace U15.

No data at pin 55 of U16. Replace U16. Type **STATUS<CR>.**

ALARMS entry shows CLEAR. Go to **Step Five:** Check Frequency.

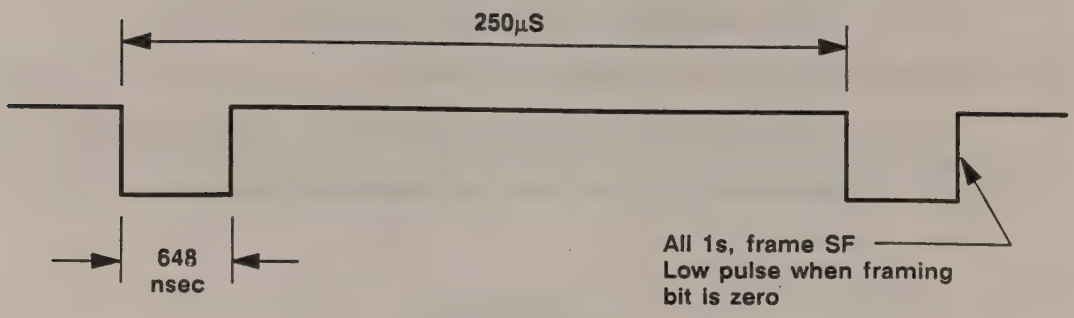

Figure 3.97. All Ones Data with Framing Bit

ALARMS entry still shows OOF. This is all you can do to check if framing is on.

The second possibility is that you don't have phase lock. Here's how you check that.

Check pin 30 on U18 for TTL clock pulse at 1.544 MHz.

TTL clock pulse is at pin 30 of U18, but not at 1.544 MHz. Adjust phase lock.

(1) Connect frequency counter to TP2.

CAUTION

Skipping step (2) may damage the card.

(2) With no signal applied, remove jumper from J18 and jumper J23.

(3) Adjust R76 for a frequency of 1.54x MHz.

(4) Move jumper from J23 to J24 and adjust R73 for a frequency of 1.44x MHz.

(5) Repeat steps (2), (3) and (4) until you get the correct frequencies.

CAUTION

Skipping step (6) may damage the card.

(6) Remove jumpers from J23 and J24 and jumper pins 2 and 3 of J8. Spray U18 with Freeze-mist (frequency may drift) and then warm U18 to 40° C. You should have no signal loss or errors.

Step Three: Type **STATUS<CR>**.

ALARMS entry shows LOP. Replace U14. Type **STATUS<CR>**.

ALARMS entry shows CLEAR. Go to **Step Five:** Check Frequency.

ALARMS entry shows LOP. Replace U15.

Step Four: Type **STATUS<CR>**.

ALARMS entry shows AIS.

1. Type **ADDR 4-TX2<CR>**. Then type **SETUP<CR>**. What you want to see is Figure 3.94 with the CLOCK entry INTERNAL. Change CLOCK entry, if you need to, by typing **CLOCK INTERNAL<CR>**. The screen won't change until you type **SETUP<CR>**.

2. Type **PATTERN 1111<CR>**. These entries will produce data pattern A, see Figure 3.98. With your oscilloscope check pin 11 of U18 for data pattern A.

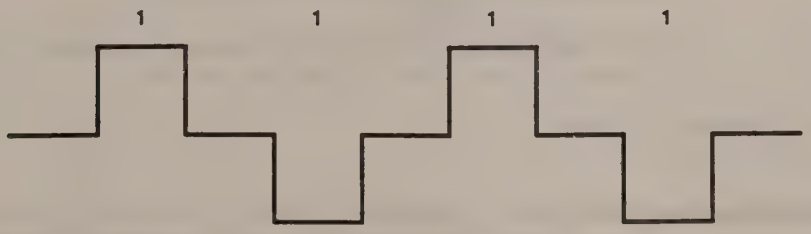

Figure 3.98. Data Pattern A, 1111

3. Type **ADDR 11-RX2<CR> STATUS<CR>.**

ALARMS entry shows CLEAR. Put Two-point card back in analyzer, reassemble analyzer, and repeat Section 3.2, making sure to check all transmitters against all receivers.

Step Five: Check Frequency.

Type **ADDR 11-RX2<CR> STATUS<CR>**. The status screen should show "__Freq.(1.544002) +1ppm", which means the DS1 output frequency is 1.544002 MHz.

DS1 input signal frequency is 1.544 MHz. Remove card extender, plug 2x2 card back into mothercard, and reassemble analyzer. Turn on the analyzer and repeat procedures in Section 3.2, making sure you check all transmitters against all receivers.

No DS1 frequency measurement, screen shows "Freq.(n/a)". With oscilloscope check signal at pin 11 of U9 and U11 for a square wave.

No squarewave at pin 11 of U9 and U11. Check pin 7 of connector J18B.

Square wave at pin 7 of J18B. Replace U25.

Square wave is not at pin 7 of J18B. Check mothercard, Section 3.3.19.

Square wave is at pin 11 of U9 and U11. Check pin 13 of U9 and U11 for clock pulses, 2.6 microseconds wide, 50 milliseconds apart.

Clock pulse is at pin 13 of U9 and U11. Replace U11 and, if necessary, U9.

No clock pulse at pin 13 of U11. Replace U26 and, if necessary, U16.

Still no clock pulse at pin 13 of U11. Check for 50-millisecond latch signal at pin 58 of U16.

No clock pulse at pin 58 of U16. Check pin 27 of J18B for 50-millisecond latch signal.

Clock pulse at pin 27 of J18B. Replace buffer U24.

No clock pulse at pin 27 of J18B. Run diagnostic test, Section 3.3.18.

Step Six: How To Calibrate DS1 Receiver

1. Connect frequency counter to TP2.

CAUTION

Skipping step (2) may damage the card.

2. With no signal applied, remove jumper from J8 and jumper J23.

3. Adjust R76 for a frequency of 1.54x MHz.

4. Move jumper from J23 to J24 and adjust R73 for a frequency of 1.44x MHz.

5. Repeat steps (2), (3) and (4) until you get the correct frequencies.

CAUTION

Skipping step (6) may damage the card.

6. Remove jumpers from J23 and J24 and jumper pins 2 and 3 of J8. Spray U18 with Freeze-mist (frequency may drift) and then warm U18 to 40° C. You should have no signal loss or errors.

7. Remove signal cable, and then reconnect. Frequency is 1.54 MHz.

8. Set DS1 transmitter by typing **FRAME 4-TX2 SF<CR>CODE AMI<CR> PATTERN 3IN24<CR>.** Frequency stays at 1.54 MHz.

9. Disconnect and reconnect signal cable ten times and verify lockup (frequency stays the same.)

10. Change DS1 transmitter by typing **PATTERN 1-7<CR>.** Disconnect and reconnect signal cable several times and verify lockup (frequency stays the same).

11. Change transmitter by typing **CODE B8ZS<CR>FRAME PRBS-23<CR>.** Type **REP 11-RX2 REM REF 00:01:00 RUN <CR>** and verify lockup (frequency stays the same). Type **STOP <CR>** to stop this test.

12. Replace signal cable with 27 dB cable and run one-minute test and verify no errors.

Step Seven: How to Check Signaling Bits.

NOTE

When the signaling bit pattern is incorrect, replace U16.

1. Connect DS1 transmitter output to DS1 transmitter input. Set the DS1 transmitter like this: Type **FRAME 4-TX2 SF<CR>CODE B8ZS<CR>PATTERN PRBS 20<CR>.**

2. Use the demux card address and type **SIGNALING 11-RX2.** Figure 3.99 shows the signaling bit pattern for a prbs pattern. (There are no C or D bits for SF framing.)

```
                              DS1 Error Rate Test              ALARMS CLEAR
-------------------------------------------------------------------------------
01:01:05  01/01   SA AT 9000 ATLANTA GA     Slot 2 RX2 DS1        Mode:  SF B8ZS
END OF TEST RESULTS                         Timer: 00:00:03       Pattern:PRBS20
-------------------------------------------------------------------------------
                              DS1 Signaling Status
          1-6                  7-12                 13-18                19-24
        -------              -------              -------              -------
A   ?  ?  ?  ?  ?  ?    ?  ?  ?  ?  ?  ?    ?  ?  ?  ?  ?  ?    ?  ?  ?  ?  ?  ?
B   ?  ?  ?  ?  ?  ?    ?  ?  ?  ?  ?  ?    ?  ?  ?  ?  ?  ?    ?  ?  ?  ?  ?  ?
C   x  x  x  x  x  x    x  x  x  x  x  x    x  x  x  x  x  x    x  x  x  x  x  x
D   x  x  x  x  x  x    x  x  x  x  x  x    x  x  x  x  x  x    x  x  x  x  x  x

                                                                        00853
```

Figure 3.99 PRBS Signaling Bit Pattern

3. Change the DS1 transmitter settings by typing **FRAME 4-TX2 SF<CR>CODE B8ZSR>PATTERN 1111.** Then type **SIGNALING 11-RX2.** Figure 3.100 shows you the signaling bit pattern with all 1s.

```
                              DS1 Error Rate Test              ALARMS CLEAR
-------------------------------------------------------------------------------
01:01:05  01/01   SA AT 9000 ATLANTA GA     Slot 2 RX2 DS1        Mode:  SF B8ZS
END OF TEST RESULTS                         Timer: 00:00:03       Pattern:ALL 1S
-------------------------------------------------------------------------------
                              DS0 Signaling Status
          1-6                  7-12                 13-18                19-24
        -------              -------              -------              -------
A   1  1  1  1  1  1    1  1  1  1  1  1    1  1  1  1  1  1    1  1  1  1  1  1
B   1  1  1  1  1  1    1  1  1  1  1  1    1  1  1  1  1  1    1  1  1  1  1  1
C   x  x  x  x  x  x    x  x  x  x  x  x    x  x  x  x  x  x    x  x  x  x  x  x
D   x  x  x  x  x  x    x  x  x  x  x  x    x  x  x  x  x  x    x  x  x  x  x  x

                                                                        00854
```

Figure 3.100. All Ones Signaling Bits

4. Change the DS1 transmitter by typing **FRAME 4-TX2 SF<CR>CODE B8ZS<CR>PATTERN 0000.** Then type **SIGNALING 11-RX2.** Figure 3.101 shows you the signaling bits pattern with all 0s.

```
                                DS1 Error Rate Test                ALARMS CLEAR
-------------------------------------------------------------------------------
01:01:05  01/01   SA AT 9000 ATLANTA GA     Slot 2 RX2 DS1        Mode:  SF B8ZS
END OF TEST RESULTS                         Timer: 00:00:03       Pattern:ALL 0S
-------------------------------------------------------------------------------
                                DS0 Signaling Status
          1-6                  7-12                 13-18                19-24
        ------               ------               ------               ------
A   0  0  0  0  0  0    0  0  0  0  0  0    0  0  0  0  0  0    0  0  0  0  0  0
B   0  0  0  0  0  0    0  0  0  0  0  0    0  0  0  0  0  0    0  0  0  0  0  0
C   x  x  x  x  x  x    x  x  x  x  x  x    x  x  x  x  x  x    x  x  x  x  x  x
D   x  x  x  x  x  x    x  x  x  x  x  x    x  x  x  x  x  x    x  x  x  x  x  x

                                                                          00855
```

Figure 3.101. All Zeros Signaling Bits

This is all you can do to the DS1 two-point Channel 2 receiver.

3.3.17 Signal Analysis Card

NOTE

Replacements for some components on the signal analysis card are only available from Scientific-Atlanta. They're listed in Chapter 4, Parts List, but they're also listed here for your convenience.

Reference Designator	Scientific-Atlanta Part Number
U22	461093
U24	309652
U25	309653
U26	309654
U33	309655
U36	461093
U38	309656
U39	309657

3.3.17.1 DS1 Circuit

These procedures are for a suspect signal analysis card in slot 2 with a good DS1 transmitter in slot 7. Change the keycard addresses to fit your configuration. You will need a 1010 data pattern in the good transmitter and the framing turned off. Here's how you set up the transmitter.

1. Type **ADDR 7-TX2<CR> SETUP<CR>**. What you want to see on your screen is Figure 3.102 with the CLOCK entry INTERNAL. Change the CLOCK entry, if you need to, by typing **CLOCK INTERNAL<CR>**. The screen won't change until you type **SETUP<CR>**.

2. Type **STATUS<CR> FRAME SF<CR> PATTERN 1010<CR> LEVEL DSX<CR>**. Now your transmitter is set.

3. Put the signal analysis card on the Scientific-Atlanta card extender. Have the schematic handy (Chapter 5) and refer to Figure 3.103 to locate components.

```
REMOTE>addr 7-TX1

REMOTE (7-TX1)>setup

          Channel  :  DS1 7-TX1
       Tx Output   :  ON
             Code  :  AMI
            Frame  :  SF
          Pattern  :  PRBS-20

   Loopback (esf)  :  OFF
   Loopcode (esf)  :  CSU-LINE
    Loopback (sf)  :  OFF
    Loopcode (sf)  :  CSU-LINE

           Yellow  :  OFF
            Clock  :  INTERNAL
         Tx-Busy   :  OFF

           Errors  :  Pattern: BIT    Frame: FBIT    Coding: BPV
```

00575-01

Figure 3.102. DS1 Transmitter Setup Screen

4. Connect DS1-TX2 in slot 7 to DS1 IN in slot 2.

5. Type **ADDR 2-SA2<CR> SUMM<CR>**. You'll see a DS1 Signal Analysis Summary screen, similar to Figure 3.104. Your screen will be different because your card failed procedures of Section 3.3.2; therefore, your screen will be showing "fail" somewhere, depending on the problem.

6. You'll have two kinds of problems. No DS1 signal or a distorted DS1 signal. Let's take the case of no DS1 signal.

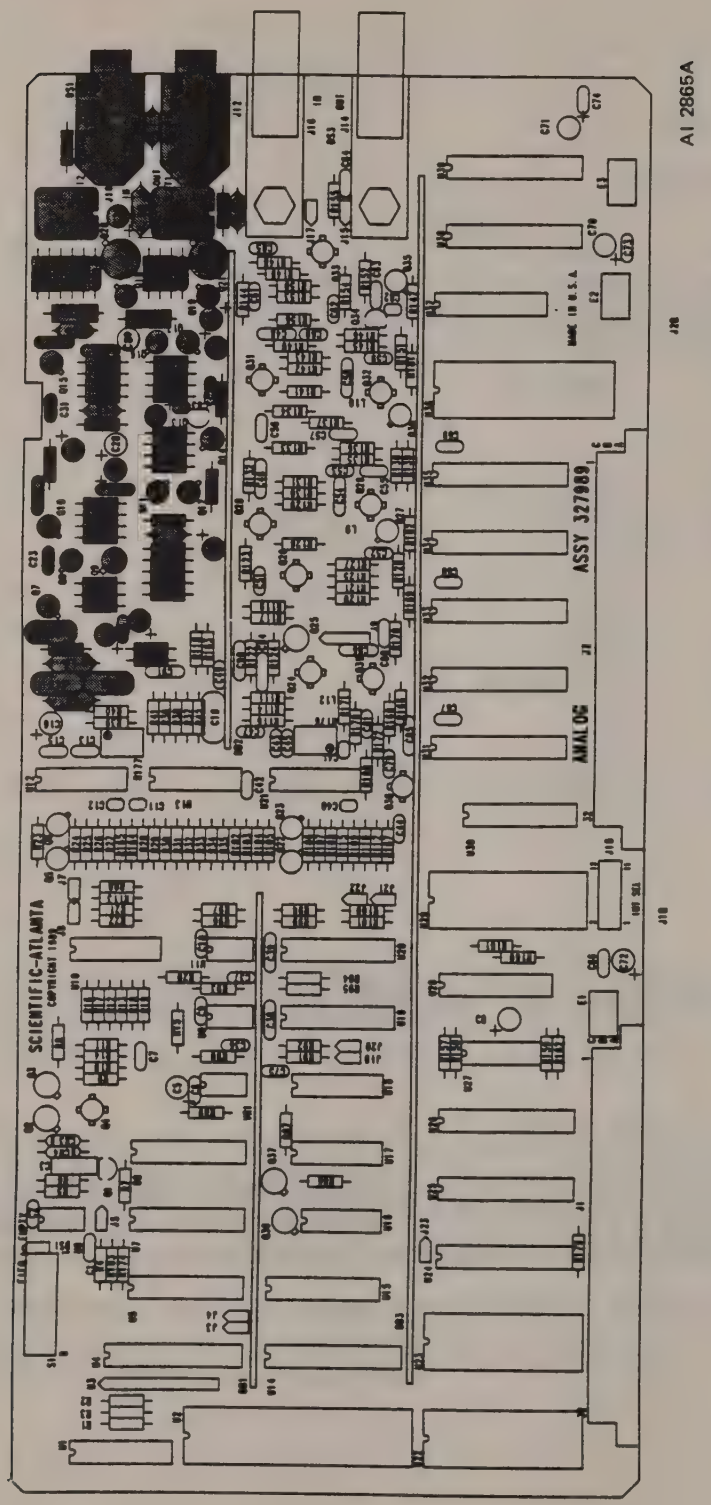

Figure 3.103. DS1 Components of Signal Analysis Card

```
REMOTE> ADDR 2-SA2

REMOTE (2-SA2)>summ

                          DS1 Signal Analysis                    ALARMS  CLEAR
09:30:22  82/-8   SA AT 9000   ATLANTA GA   Slot 2 SA2                DS1 In: DSX
END OF TEST RESULTS                         Timer: 00:00:01

DS1:              ---Current---      Hist                ---Current---      Hist
  +Peak Volt   =  pass    3.29v            -Peak Volt   =  pass    -3.26v
  +75% Width   =  pass    292ns            -75% Width   =  pass    290ns
  +50% Width   =  pass    315ns            -50% Width   =  pass    311ns
  +25% Width   =  pass    334ns            -25% Width   =  pass    331ns

  Symmetry ......  pass    0.1dB            Level .........  pass    0.9dB

     0 failures during test

  REMOTE (2-SA2)>
```

AI 3189A

Figure 3.104. Typical DS1 Signal Analysis Summary Screen

Step One: No DS1 Signal.

(On the Summary screen, lines "+Peak Volt =" or "-Peak Volt =" will show a "fail" and maybe a "fail" on one of the "Width" lines or on the "Symmetry" line.)

NOTE

After replacing any component, always check the Summary screen. When you have all "pass"es (on the Peak Volt, Width and Symmetry lines), you have corrected the problem. A Summary screen that looks like Figure 3.105 is what we are striving for.

1. Check input of comparator U12, pin 9 for symmetrical bipolar signal with peak voltage of 0.76 volts that fits within template, see Figure 3.105.

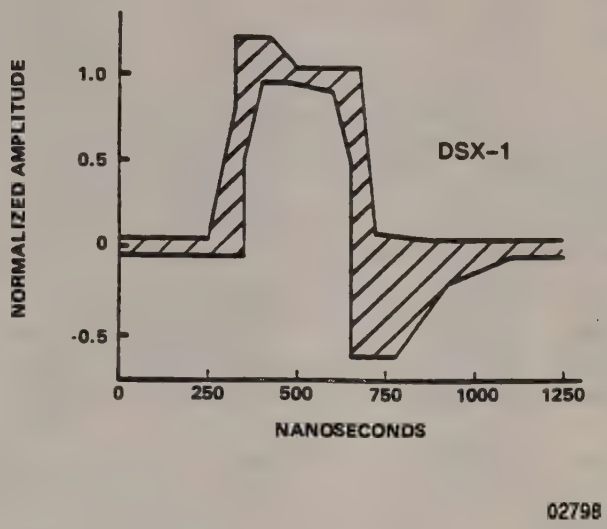

Figure 3.105. DS1 Bipolar Signal

No bipolar signal on pin 9 of U12. With oscilloscope, check across pins 1 and 2 of connector J11 for bipolar signal with 3 volts peak voltage.

No bipolar signal across pins 1 and 2 of connector J11. Replace cable connected to J11, See Figure 3.106.

Bipolar signal across pins 1 and 2 of connector J11. You have a signal coming in the DS1 section, but nothing going out. Check collector (3) of transistor Q15 for +5 volts switching signal.

No switching signal at collector (3) of transistor Q15. Check at base (2) of transistor Q15 for +5 volts switching signal.

No switching signal at base (2) of transistor Q15. Replace transformer T2.

Switching signal is at base (2) of transistor Q15. Replace transistor Q15.

Switching signal at collector (3) of transistor Q15. Check collector of selector U5, pin 13 for +5 volts switching signal.

No switching signal at pin 13 of U5. Replace U5.

Switching signal is at pin 13 of U5. Check collector (3) of transistor Q14 for +5 volts switching signal.

No switching signal at collector (3) of transistor Q14. Replace Q14. Then, if necessary, replace Q13 and Q15 in that order.

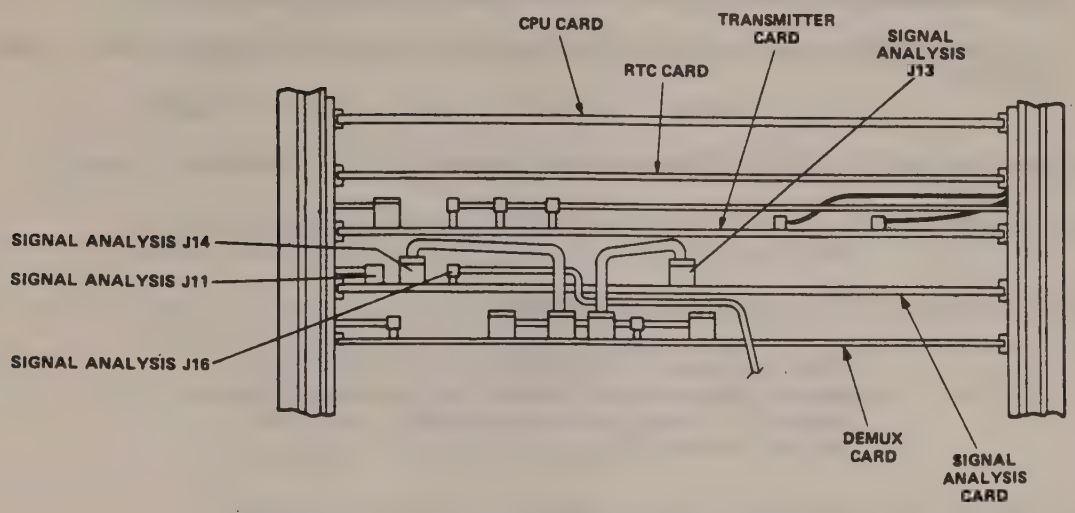

Figure 3.106. Analyzer Connection Cables

2. Check collector (3) of transistor Q10 for +5 volt switching signal.

   No switching signal at collector (3) of transistor Q10. Check base (2) of Q10 for +5 volts switching signal.

      No switching signal at base (2) of transistor Q10. Replace coupling capacitor C31.

      Switching signal is at base (2) of transistor Q10. Replace transistor Q10.

   Switching signal is at collector (3) of transistor Q10. Check collector (3) of transistor Q7 for +5 volt switching signal.

      No switching signal at collector (3) of transistor Q7. Check base (2) of transistor Q7 for +5 volt switching signal.

         No switching signal at base (2) of transistor Q7. Replace coupling capacitor C23.

         Switching signal is at base (2) of transistor Q7. Replace Q7.

3. **Type SUMM<CR>.**

Summary screen shows all "pass"es. Remove signal analysis card from card extender, remove card extender, plug signal analysis card back in mothercard, reassemble analyzer, and repeat procedures in Section 3.3.2 that apply to this card.

Summary screen shows one or more "fail"s. Check pin 9 of comparator U12 for DS1 bipolar signal.

DS1 bipolar signal is not at pin 9 of U12. Check mothercard, Section 3.3.19.

DS1 bipolar signal is at pin 9 of U12 but does not meet specifications. Go to **Step Two:** Distorted DS1 Signal.

Step Two: Distorted DS1 Signal. (On Summary screen you have one or more "fail"s.)

NOTE

After replacing any component, always check the Summary screen. When you have all "pass"es, you have corrected the problem. A Summary screen that looks like Figure 3.104 is what we are striving for.

1. Put the signal analysis card on the Scientific-Atlanta card extender. Have the schematic handy (Chapter 5) and refer to Figure 3.103 to locate components.

2. Check the collector (3) of transistor Q15 for bipolar signal, see Figure 3.105.

Signal not distorted at collector (3) of transistor Q15. Check collector (3) of transistor Q10 for bipolar signal.

Signal not distorted at collector (3) of Q10. Check collector (3) of transistor Q7 for bipolar signal.

Signal not distorted at collector (3) of transistor Q7. Replace L2, L3, C17, C18, C20.

Signal distorted at collector (3) of transistor Q7. Check base (2) of Q7 for bipolar signal.

Signal distorted at base (2) of transistor Q7. Replace coupling capacitor C23.

Signal not distorted at base (2) of transistor Q7. Replace transistor Q7.

Signal distorted at collector (3) of Q10. Check base (2) of transistor Q10 for bipolar signal.

Signal not distorted at base (2) of transistor Q10. Replace transistor Q10.

Signal still distorted at collector (3) of transistor Q10. Check selector U5, pin 18 for +5 volts dc.

No voltage at pin 18 of U5. Replace U5.

Voltage is at pin 18 of U5. Type **STATUS 7-TX2<CR> LEVEL DSX<CR>** and use your oscilloscope to check the collector of transistor Q10 for 0 volts. Then type **LEVEL DSX-MON <CR>** and check the collector of transistor Q10 for +5 volts.

No voltage at collector of transistor Q10. Check for +5 volts at collector (3) of transistor Q11.

No voltage at collector (3) of Q11. Check for +5 volts at collector (3) of transistor Q12.

No voltage at collector (3) of Q12. Replace Q12.

Voltage at collector (3) of Q11. Replace coupling capacitor C24.

Voltage at collector of transistor Q10. Check Summary screen for "fail"s.

No "fail"s on Summary screen. Remove signal analysis card from card extender, reassemble analyzer and repeat procedures in Section 3.3.2 that apply to this card.

Still have one or more "fail"s on Summary screen. Check collector (3) of transistor Q15 for DS1 bipolar signal.

Signal distorted at collector (3) of Q15. Check selector U5, pin 18 for +5 volts dc.

No voltage at pin 18 of U5. Replace U5.

Voltage at pin 18 of U5. Type **STATUS 7-TX2 <CR>LEVEL DSX<CR>** and use your oscilloscope to check the collector of transistor Q15 for 0 volts. Then type **LEVEL DSX-MON<CR>** and check the collector of transistor Q15 for +5 volts.

No voltage at collector (3) of Q15. Check for voltage on collector (3) of transistor Q16.

No voltage at collector (3) of Q16. Check for voltage on collector (3) of transistor Q17.

No voltage at collector (3) of Q17. Replace Q17.

Voltage at collector (3) of Q17. Replace Q16.

Voltage at collector (3) of Q16. Replace coupling capacitor C32.

This is all you can do to the DS1 part of the signal analysis card.

3.3.17.2 DS3 Circuit

These procedures are for a suspect signal analysis card in slot 2 with a good DS3 transmitter in slot 4. Change the keycard addresses to fit your configuration. You will need a 1010 data pattern in the good transmitter and the framing turned off. Here's how you set up the transmitter.

1. Type **ADDR4-TX1<CR> SETUP<CR>**. What you want to see on your screen is Figure 3.107 with the CLOCK entry INTERNAL. Change CLOCK entry, if you need to, by typing **CLOCK INTERNAL<CR>**.

2. Type **STATUS <CR> FRAME M13<CR> PATTERN 1010<CR>LEVEL DSX<CR>**.

REMOTE>addr 4-TX1

REMOTE (4-TX1)>setup

Channel	:	DS3 4-TX1
Tx Output	:	ON
Level	:	DSX
Frame	:	M13
Pattern	:	PRBS-15
Clock	:	INTERNAL
Tx-Busy	:	OFF
Xbit	:	1
Errors	:	Pattern: BIT Frame: FBIT Coding: BPV

REMOTE (4-TX1)>

02859

Figure 3.107. DS3 Transmitter Setup Screen

3. Put the signal analysis card on the Scientific-Atlanta card extender. Have the schematic handy (Chapter 5) and refer to Figure 3.108 to locate components.

4. Connect DS3-TX1 in slot 4 to DS3 IN in slot 2.

5. Type **ADDR 2-SA2<CR> SUMM<CR>**. Your screen will look like Figure 3.109, except your screen will show one or more "fail"s depending on what kind of trouble you have.

6. You'll have two kinds of trouble: No DS3 signal or a distorted DS3 signal. Let's take the case of no DS3 signal.

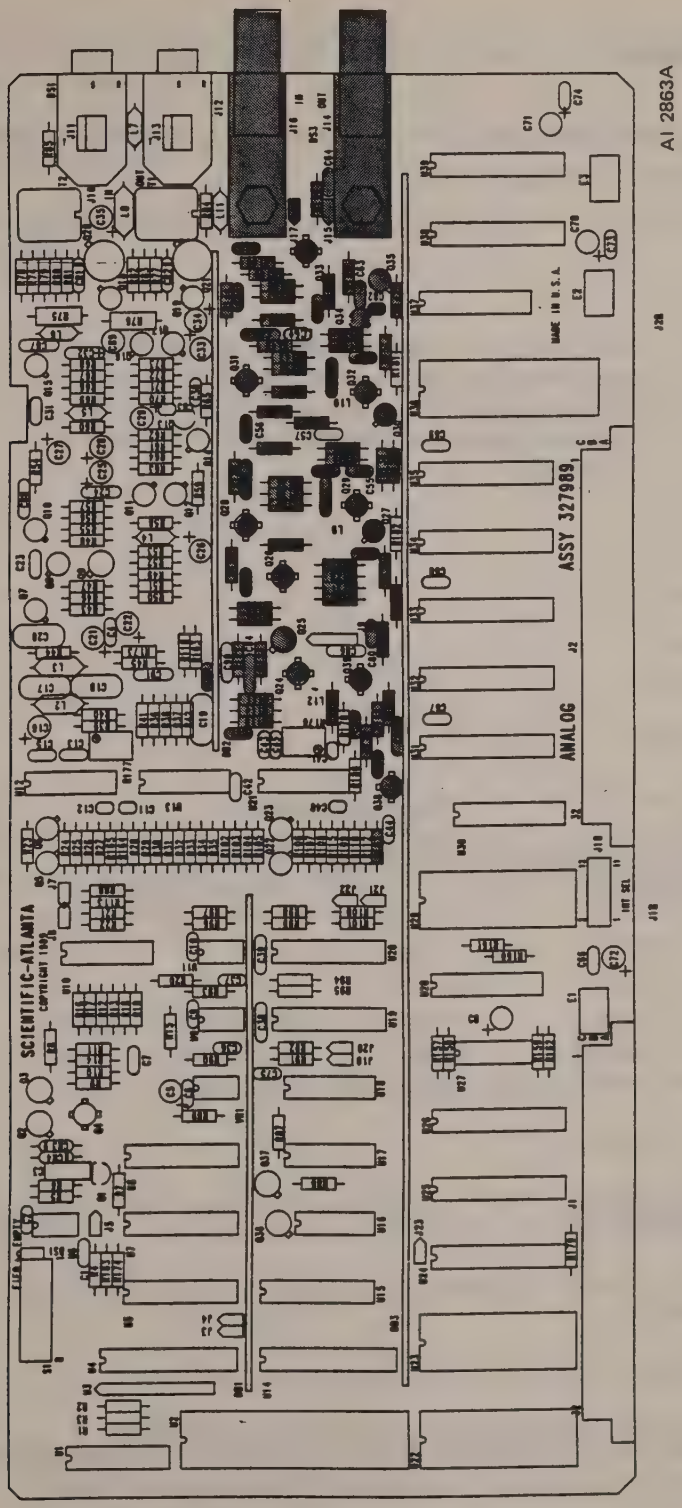

Figure 3.108. DS3 Components of Signal Analysis Card

Step One: No DS3 Signal.

(On the Summary screen, lines "+Peak Volt = " or "-Peak Volt = " will show a "fail" and maybe a "fail" on one of the "Width" lines or on the "Symmetry" line.)

NOTE

After replacing any component, always check the Summary screen. When you have all "pass"es (on the Peak Volt, Width and Symmetry lines), you have corrected the problem. A Summary screen that looks like Figure 3.109 is what we are striving for.

```
REMOTE> addr 2-SA1

REMOTE (2-SA1)>run

REMOTE (2-SA1)>stop

REMOTE (2-SA1)>summ

                              DS3 Signal Analysis                    ALARMS  CLEAR
-------------------------------------------------------------------------------------
 04:15:42  01/18   SA AT 9000   ATLANTA GA   Slot 2 SA1                 DS3 In: DSX
 END OF TEST RESULTS                        Timer: 00:00:00
-------------------------------------------------------------------------------------
DS3:                 ---Current---   Hist                  ---Current---   Hist
   +Peak Volt    =  pass            0.05 V   -Peak Volt    =  pass          0.05 V
   +75% Width    =  pass            9 ns     -75% Width    =  pass          10 ns
   +50% Width    =  pass            10 ns    -50% Width    =  pass          11 ns
   +25% Width    =  pass            20 ns    -25% Width    =  pass          21 ns

   Symmetry ...... -1.1 dB                   Level ......... 0 dBx

      0 failures during test

   REMOTE (2-SA1)>
```

02797-01

Figure 3.109. Typical DS3 Signal Analysis Summary Screen

1. Check input of comparator U21, pin 9 for symmetrical bipolar signal with peak voltage of 0.24 volts that fits within template, see Figure 3.110.

   No bipolar signal at pin 9 of U21. With oscilloscope, check across pins 1 and 2 of connector J17 for bipolar signal with 3 volts peak voltage.

   No bipolar signal across pins 1 and 2 of connector J17. Replace cable connected to J16, see Figure 3.106.

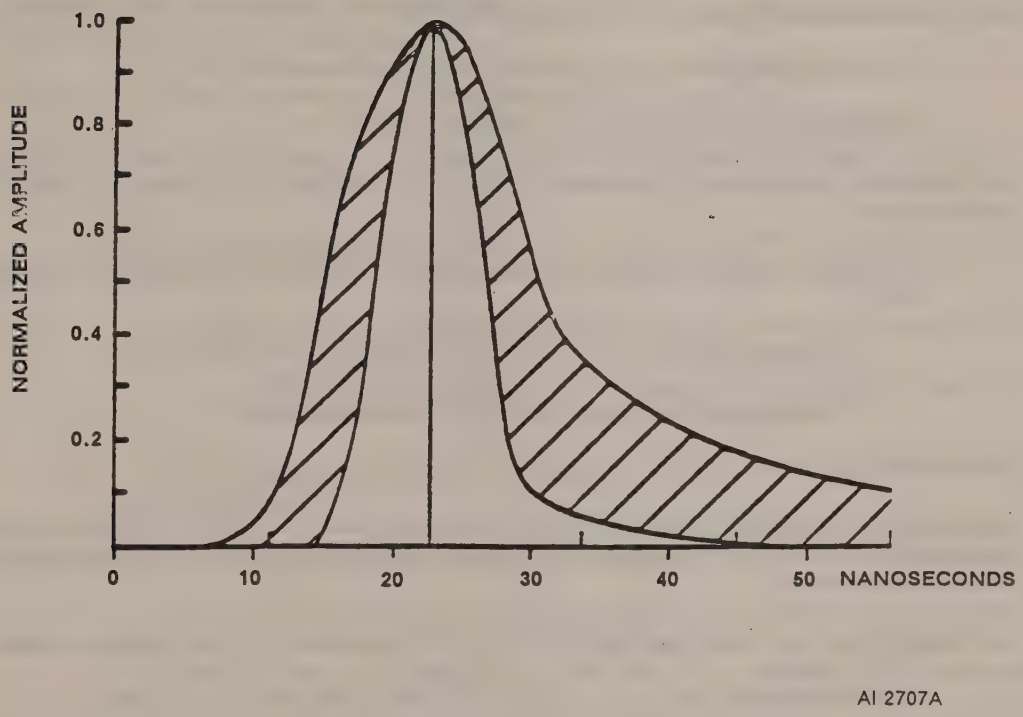

Figure 3.110. DS3 Bipolar Signal

Bipolar signal across pins 1 and 2 of connector J17. You have a signal coming in the DS3 section, but nothing going out. Check collector (1) of transistor Q31 for +5 volts switching signal.

No switching signal at collector (1) of transistor Q31. Check at base (3) of transistor Q31 for +5 volts switching signal.

No switching signal at base (3) of transistor Q31. Replace coupling capacitor C65.

Switching signal is at base (3) of transistor Q31. Replace transistor Q31.

Switching signal at collector (1) of transistor Q31. Check collector of selector U5, pin 19 for +5 volts switching signal.

No switching signal at pin 19 of U5. Replace U5.

Switching signal is at pin 19 of U5. Check collector (3) of transistor Q35 for +5 volt switching signal.

No switching signal at collector (3) of transistor Q35. Replace Q35. Then, if necessary, replace Q34 and Q31 in that order.

2. Check collector (1) of transistor Q28 for +5 volts switching signal.

No switching signal at collector (1) of transistor Q28. Check base (3) of Q28 for +5 volt switching signal.

No switching signal at base (3) of Q28. Replace coupling capacitor C56.

Switching signal is at base (3) of Q28. Replace transistor Q28.

Switching signal is at collector (1) of transistor Q28. Check collector (1) of transistor Q24 for +5 volts switching signal.

No switching signal at collector (1) of transistor Q24. Check base (3) of Q24 for +5 volts switching signal.

No switching signal at base (3) of Q24. Replace coupling capacitor C51.

Switching signal is at base (3) of Q24. Replace transistor Q24.

3. Type **SUMM<CR>**.

Summary screen shows all "pass"es. Remove signal analysis card from card extender, remove card extender, plug signal analysis card back in mothercard, reassemble analyzer, and repeat procedures in Section 3.3.2 that apply to this card.

Summary screen shows one at more "fail"s. Check pin 9 of comparator U21 for DS3 bipolar signal.

DS3 bipolar signal is not at pin 9 of U21. Check the mothercard, Section 3.3.19.

DS3 bipolar signal is on pin 9 of U21 but does not meet specifications. Go to **Step Two:** Distorted DS3 Signal.

Step Two: Distorted DS3 Signal.

You have a bipolar signal at input of U21, pin 9, but it is distorted and on the Signal Analysis Summary screen you have one or more "fail"s.

NOTE

After replacing any component, always check the Summary screen. When you have all "pass"es, you have corrected the problem. A Summary screen that looks like Figure 3.109 is what we are striving for.

1. Put the signal analysis card on the Scientific-Atlanta card extender. Have the schematic handy (Chapter 5) and refer to Figure 3.108 to locate components.

2. Check the collector (1) of transistor Q31 for bipolar signal, see Figure 3.110.

Signal not distorted at collector (1) of transistor Q31. Check collector (1) of transistor Q28 for bipolar signal.

Signal not distorted at collector (1) of transistor Q28. Check collector (1) of transistor Q24 for bipolar signal.

Signal not distorted at collector (1) of transistor Q24. Check base (3) of transistor Q39.

Signal not distorted at base (3) of transistor Q39. Replace transistor Q39 and coupling capacitor C81.

Signal distorted at collector (1) of transistor Q24. Check base (3) of transistor Q24 for bipolar signal.

Signal distorted at base (3) of transistor Q24. Replace coupling capacitor C51.

Signal not distorted at base (3) of transistor Q24. Replace transistor Q24.

Signal distorted at collector of Q28. Check base (3) of transistor Q28 for bipolar signal.

Signal not distorted at base (3) of transistor Q28. Replace transistor Q28.

Signal still distorted at base (3) of transistor Q28. Replace coupling capacitor C56.

2. Check selector U5, pin 18 for +5 volts dc.

No voltage at pin 18 of U5. Check U21, pin 8 for bipolar signal.

Distorted bipolar signal still at U21, pin 9. Replace signal analysis card.

Voltage is at pin 18 of U5. Type **ADDR 4-TX1<CR> LEVEL DSX3<CR>** and use your oscilloscope to check the collector of transistor Q28 for 0 volts. Type **LEVEL DSX3 MON<CR>** and check the collector of transistor Q28 for +5 volts.

No voltage at collector of transistor Q28. Check for +5 volts at collector (1) of transistor Q29.

No voltage at collector (1) of Q29. Check for +5 volts at collector (3) of Q27.

No voltage at collector (3) of Q27. Replace Q27.

Voltage at collector (3) of Q27. Replace Q29.

Voltage at collector (1) of Q29. Replace coupling capacitor C54.

3. Check collector (1) of transistor Q31 for DS3 bipolar signal.

Signal distorted at collector (1) of transistor Q31. Check selector U5, pin 18 for +5 volts dc.

No voltage at pin 18 of U5. Check pin 8 of U21 for bipolar signal.

Distorted bipolar signal at pin 8 of U21. Replace signal analysis card.

Voltage is at pin 18 of U5. Type **LEVEL DSX3<CR>** and use your oscilloscope to check the collector of transistor Q31 for 0 volts.

Type **LEVEL DSX3 MON<CR>** and check the collector of transistor Q31 for +5 volts.

No voltage at collector (1) of Q31. Check for voltage at collector (3) of Q30.

No voltage at collector (3) of Q30. Replace Q30.

Voltage at collector (3) of Q30. Replace Q31.

Voltage at collector (1) of Q31. Replace coupling capacitor C58.

This is all you can do to troubleshoot the signal analysis card.

3.3.18 Diagnostic Test

CAUTION

**Always turn the analyzer power off when changing cards.
Always!**

These diagnostic procedures are for an AT 9000 Analyzer, Version 3.10 or higher. The revision number appears in the upper right-hand corner of the sign-on screen.

The results of the diagnostic program can be read in two different ways.

First, you can read the master CPU LEDs on top of the master CPU card, see Figure 3.111.

These eight CPU LEDs give you binary read-out, with the least significant bit on the far right (as you face the front of the analyzer), and the most significant bit the seventh CPU LED from the right. The CPU LED on the far left, the eighth one, is the pass/fail light.

There are 30 tests, and when a test fails, the pass/fail CPU LED lights, and the test sequence pauses, giving you time to record the CPU LED light pattern.

Figure 3.112 gives you a relation between the CPU LED pattern and the test number. A "1" means the CPU LED is on; a "0" means it is off.

When a test fails, the diagnostic sequence either stops or pauses, giving you time to note the CPU LED sequence. From Figure 3.112 you can identify failed test and proceed to the troubleshooting procedure.

After the 30th step, the sequence pauses. With the "dead-man" jumper on the RTC card in place, see Figure 3.113, the diagnostic sequence starts over. With the "dead-man" jumper out, the diagnostic sequence just stops. To rerun the diagnostic, either turn the analyzer off and then on, or replace the "dead-man" jumper.

In fact, this is the test for the dead-man jumper.

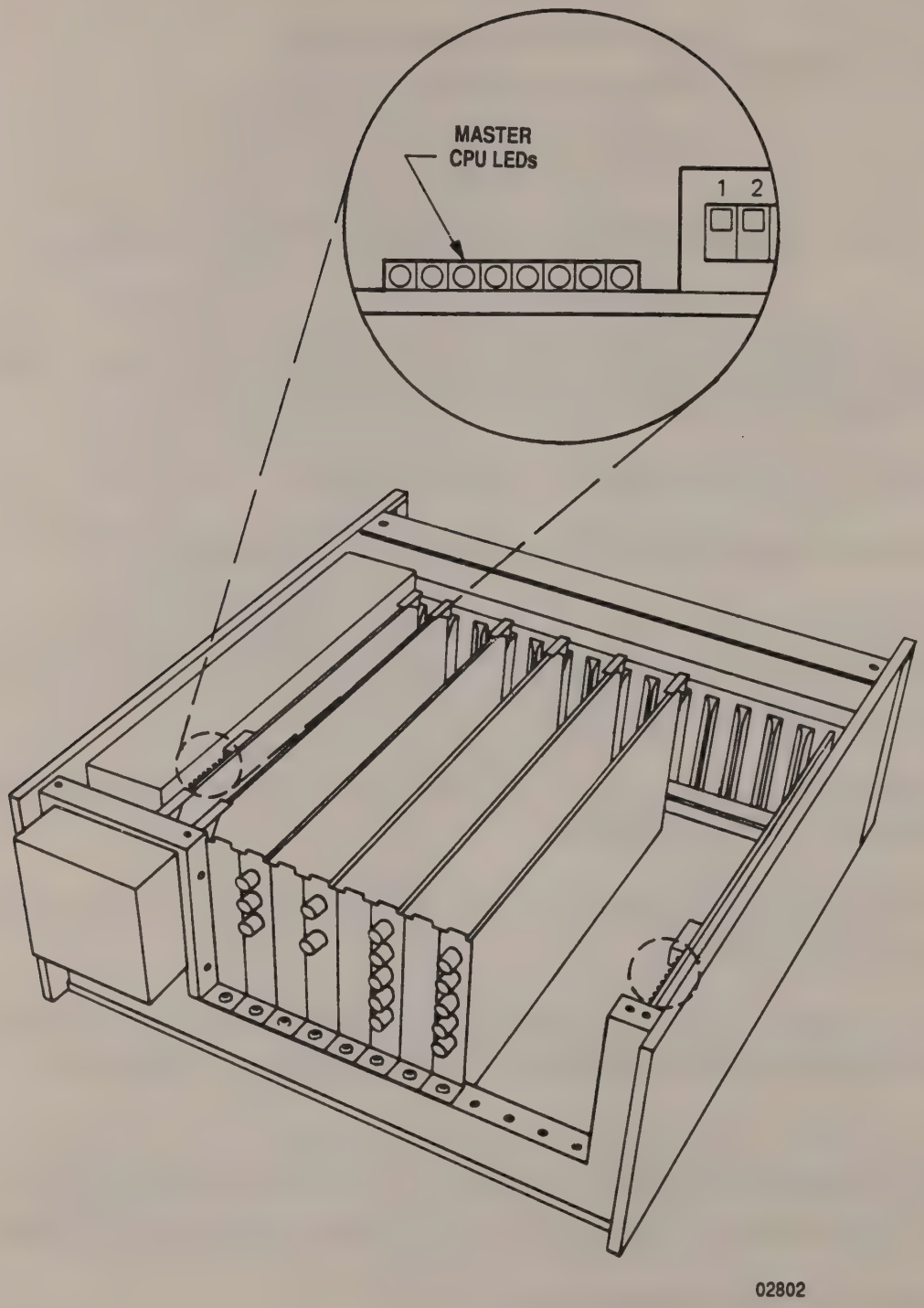

Figure 3.111. CPU LEDs

CPU LED Pattern	Test Number
0 0 0 0 0 0 0	0
0 0 0 0 0 0 1	1
0 0 0 0 0 1 0	2
0 0 0 0 0 1 1	3
0 0 0 0 1 0 0	4
0 0 0 0 1 0 1	5
0 0 0 0 1 1 0	6
0 0 0 0 1 1 1	7
0 0 0 1 0 0 0	8
0 0 0 1 0 0 1	9
0 0 0 1 0 1 0	10
0 0 0 1 0 1 1	11
0 0 0 1 1 0 0	12
0 0 0 1 1 0 1	13
0 0 0 1 1 1 0	14
0 0 0 1 1 1 1	15
0 0 1 0 0 0 0	16
0 0 1 0 0 0 1	17
0 0 1 0 0 1 0	18
0 0 1 0 0 1 1	19
0 0 1 0 1 0 1	21
0 0 1 0 1 1 0	22
0 0 1 0 1 1 1	23
0 0 1 1 0 0 0	24
0 0 1 1 0 0 1	25
0 0 1 1 0 1 0	26
0 0 1 1 0 1 1	27
0 0 1 1 1 0 0	28
0 0 1 1 1 0 1	29
0 0 1 1 1 1 0	30

Figure 3.112. CPU LED Sequence/Diagnostic Test Number

Second, you can read the CRT through the serial port. Unless the analyzer malfunction you are looking for keeps the CRT from receiving the information, the same information given in binary with the CPU LEDs will be given in English on the CRT serial port screen.

Like this: TEST <test number> - <FAIL> <description>

Tests that pass are written to the terminal, so a listing of successful tests are either printed or appear on the CRT.

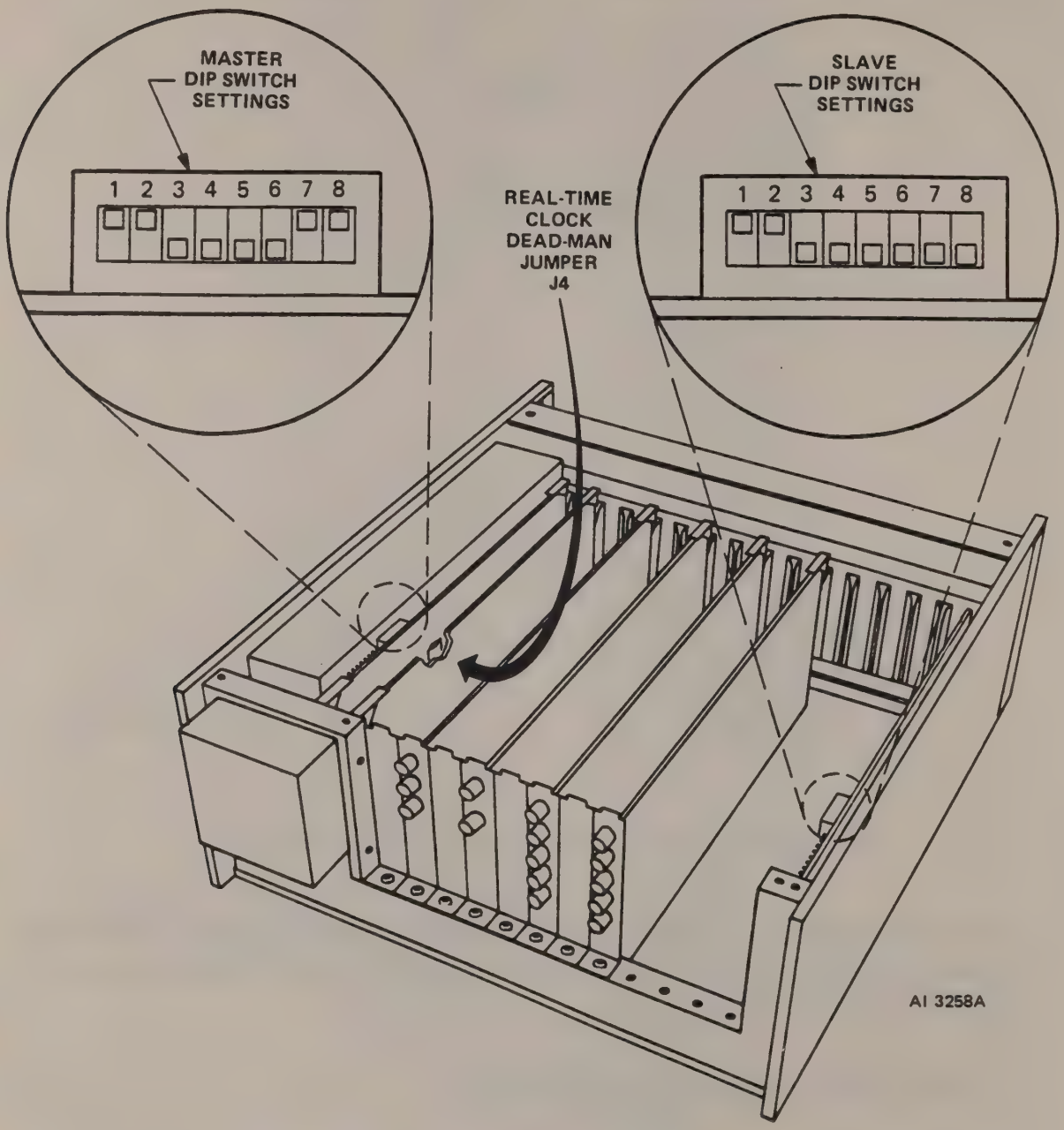

Figure 3.113. CPU DIP Switches and Dead-man Jumper

However, when tests 0 through 10 fail, the sequence stops. When tests 10 through 30 fail, the sequence pauses long enough to make a note of which test failed.

The complete sequence of 30 tests only takes about two minutes, so even if you miss something, you can always run it again.

NOTE

Ignore the results of tests 11, 16, 17, 22, 26, 27 and 29. They don't apply to this analyzer and will always fail.

Figure 3.114 lists a description of the 30 diagnostic tests.

Step One: Check the Clock/Power.

1. Put real-time clock card on Scientific-Atlanta card extender. Have the schematic handy (Chapter 5) and refer to Figure 3.115 to locate components.
2. Check battery BT1 for 3.6 to 4.0 volts.

   Battery checks 3.6 volts or more. Make sure jumper P6 is making good contact, and check collector of U28, pin 5 for >3.6 volts.

   Voltage at U28, pin 5 is same as battery voltage. Check U28, pin 2 for >3.6 volts.

   Voltage at pin 2 of U28 less than 3.6 volts. Replace Q3.

   Voltage at of U28, pin 5 is less than 3.6 volts. Replace U28.

   Battery checks 3.6 volts or less. Take jumper P6 out, replace battery, replace jumper P6, and remeasure battery voltage.

   Battery checks >3.0 volts. Go to **Step Two:** Run Diagnostic.

   Battery checks less than 3.0 volts. Replace Q2, recheck short circuit, then replace Q1 if necessary.
3. Take RTC card off card extender, remove card extender, plug RTC card back in mothercard.

Test Number	Description	Comments
0	Refresh set and test	Failure: sequence stops
1	Bank 0 CPU RAM test	Failure: sequence stops
2	Bank 1 CPU RAM test	Failure: sequence stops
3	Bank 2 CPU RAM test	Failure: sequence stops
4	Bank 3 CPU RAM test	Failure: sequence stops
5	Bank 4 CPU RAM test	Failure: sequence stops
6	Bank 5 CPU RAM test	Failure: sequence stops
7	Bank 6 CPU RAM test	Failure: sequence stops
8	Bank 7 CPU RAM test	Failure: sequence stops
9	I/O bus test	Failure: sequence stops
10	RTC serial chip test	Failure: sequence stops Pass: reports to serial port
11	Front-panel LCD test	Will fail; Ignore
12	Output CPU ROM checksums	Compare against labels on U2, U3, U4 and U5.
13	RTC chip test	Failure: sequence pauses
14	GPIB chip test	Failure: sequence pauses
15	Interrupt controller	Failure: sequence pauses
16	Front-panel switch & CPU LED	Will fail; Ignore
17	Front-panel interrupt	Will fail; Ignore
18	Serial interrupt	Failure: sequence pauses
19	10-millisecond interrupt	Failure: sequence pauses
20	20-millisecond interrupt	Failure: sequence pauses
21	Direct Memory Access Controller	Failure: sequence pauses
22	Serial Direct Memory Access	Will fail; Ignore
23	Beeper	Beeps for pass
24	NVRAM 0A0000 test	Will fail; sequence pauses
25	NVRAM 0B0000 test (bank 0)	See Note 1
26	NVRAM 0B0000 test (bank 1)	See Note 1
27	NVRAM 0B0000 test (bank 2)	See Note 1
28	Read application card	Tests and shows checksums for Application Card PROMS
29	RTC dynamic RAM test	Will fail; Ignore
30	CPU test	Will fail if there is no slave CPU.

NOTE: Will fail if no RTC memory. Test 25 requires RTC chips U3 and U4. Test 26 requires chips U5 and U6 and test 27 requires chips in U7 and U8.

Figure 3.114. Diagnostic Test List

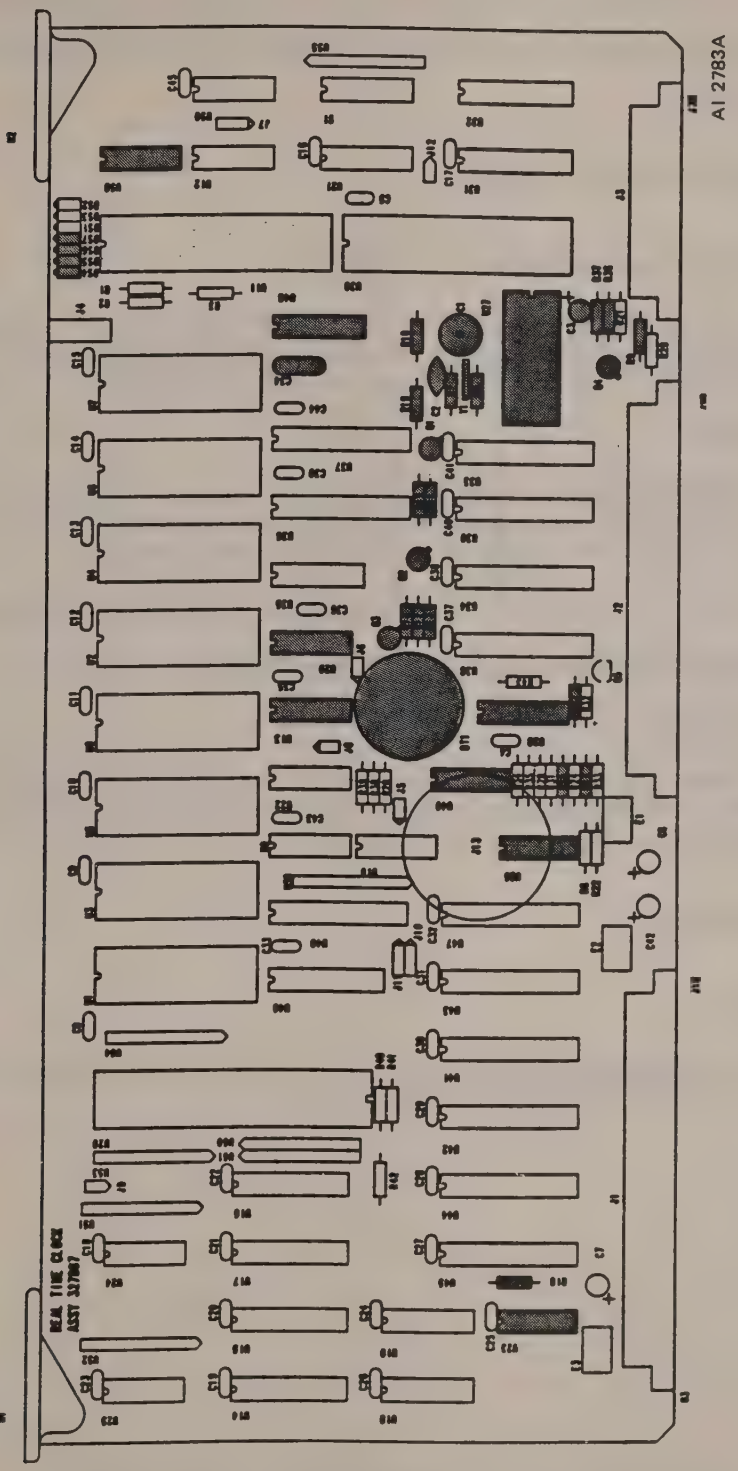

Figure 3.115. Clock/Power Components on RTC Card

Several of the diagnostic tests involve both the CPU card and the real-time clock. When this happens, take the CPU card off the card extender, plug it into the mothercard, remove the real-time clock card, put it on the card extender, and check it.

Step Two: Preliminary Diagnostic Procedure.

1. Put the CPU card on the Scientific-Atlanta card extender.

2. On the real-time clock card, remove the "dead-man" jumper, J4. This prevents the diagnostic from resetting before you can write down what happened, see Figure 3.113. (Earlier versions of the RTC card have J4 next to the battery BT1 and you take the RTC card out of the analyzer to remove J4.)

3. Turn on the analyzer.

   The sign-on message appears on the terminal screen. The screen, see Figure 3.116, shows a typical configuration we are using for troubleshooting procedures. Your selection and mix of cards will probably not match Figure 3.116, but you can easily adjust the procedures to make the typical procedure match yours.

   Type **inst-rst<CR>**. This resets all the transmitters and receivers to (factory) default settings.

   Screen reads INSTRUMENT HAS BEEN RESET. Type **DIR<CR>**.

   Directory appears. See Figure 3.117.

4. Turn off the analyzer and set DIP switches on edge of CPU cards as shown in Figure 3.113. (With more than six application cards in the analyzer, you'll need a second, "slave" CPU.) When you turn the analyzer on, diagnostics will run.

Step Three: Run Diagnostic.

1. Turn the analyzer on.

   CPU LEDs do not blink and then cycle. On connector J2, the connector between the CPU and the mothercard, check pin B23 for logic high (+4.5 to +5.0 volts).

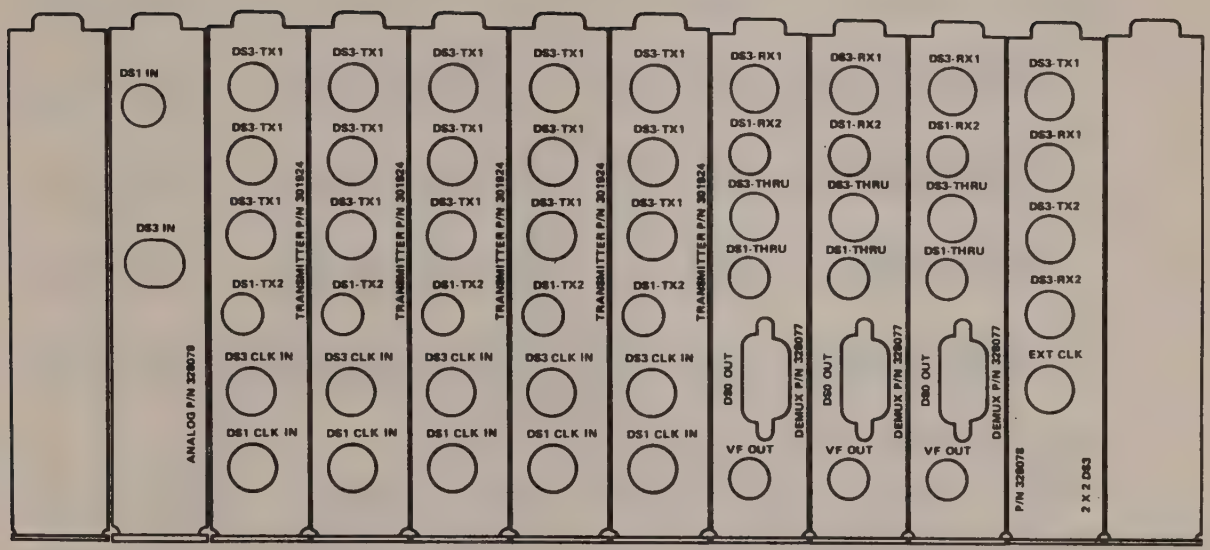

Figure 3.116. AT 9000 Analyzer, Typical Configuration

Scientific-Atlanta Digital Analysis System 1988
DIRECTORY OF ANALYSIS FUNCTIONS

Slot #	Function	Address	Status	Slot #	Function	Address	Status
2				3			
	DS3 SIGNAL ANALYSIS .	2-SA1	avail		DS3 TRANSMITTER	3-TX1	avail
	DS1 SIGNAL ANALYSIS .	2-SA2	avail		DS1 TRANSMITTER	3-TX2	avail
4				5			
	DS3 TRANSMITTER	4-TX1	avail		DS3 TRANSMITTER	5-TX1	avail
	DS1 TRANSMITTER	4-TX2	avail		DS1 TRANSMITTER	5-TX2	avail
6				7			
	DS3 TRANSMITTER	6-TX1	avail		DS3 TRANSMITTER	7-TX1	avail
	DS1 TRANSMITTER	6-TX2	avail		DS1 TRANSMITTER	7-TX2	avail
8				9			
	DS3 RECV/DMUX/THRU	8-RX1	avail		DS3 RECV/DMUX/THRU .	9-RX1	avail
	DS1 RECV/DMUX/THRU	8-RX2	avail		DS1 RECV/DMUX/THRU .	9-RX2	avail

Press <RETURN> For More [

Slot #	Function	Address	Status	Slot #	Function	Address	Status
10				11			
	DS3 RECV/DMUX/THRU	10-RX1	avail		DS3 TRANSMITTER	11-TX1	avail
	DS1 RECV/DMUX/THRU	10-RX2	avail		DS1 TRANSMITTER	11-TX2	avail
					DS3 RECEIVER	11-RX1	avail
					DS1 RECEIVER	11-RX2	avail

REMOTE>

AI 3186A

Figure 3.117. Typical Directory

Logic low (zero volts) at pin B23 of connector J2. Check real-time clock card, **Step One.**

Logic high at pin B23 of connector J2. Momentarily ground pin B23 of connector J2, see Figure 3.118.

CPU LEDs go blank and then begin to cycle. Check real-time clock card, **Step One.**

Some CPU LEDs are on, but they don't cycle. Ground pin B23 of connector J2 and hold, see Figure 3.118. Now check pins 45 and 33 of U12 for a logic high (+4.5 volts to +5.0 volts).

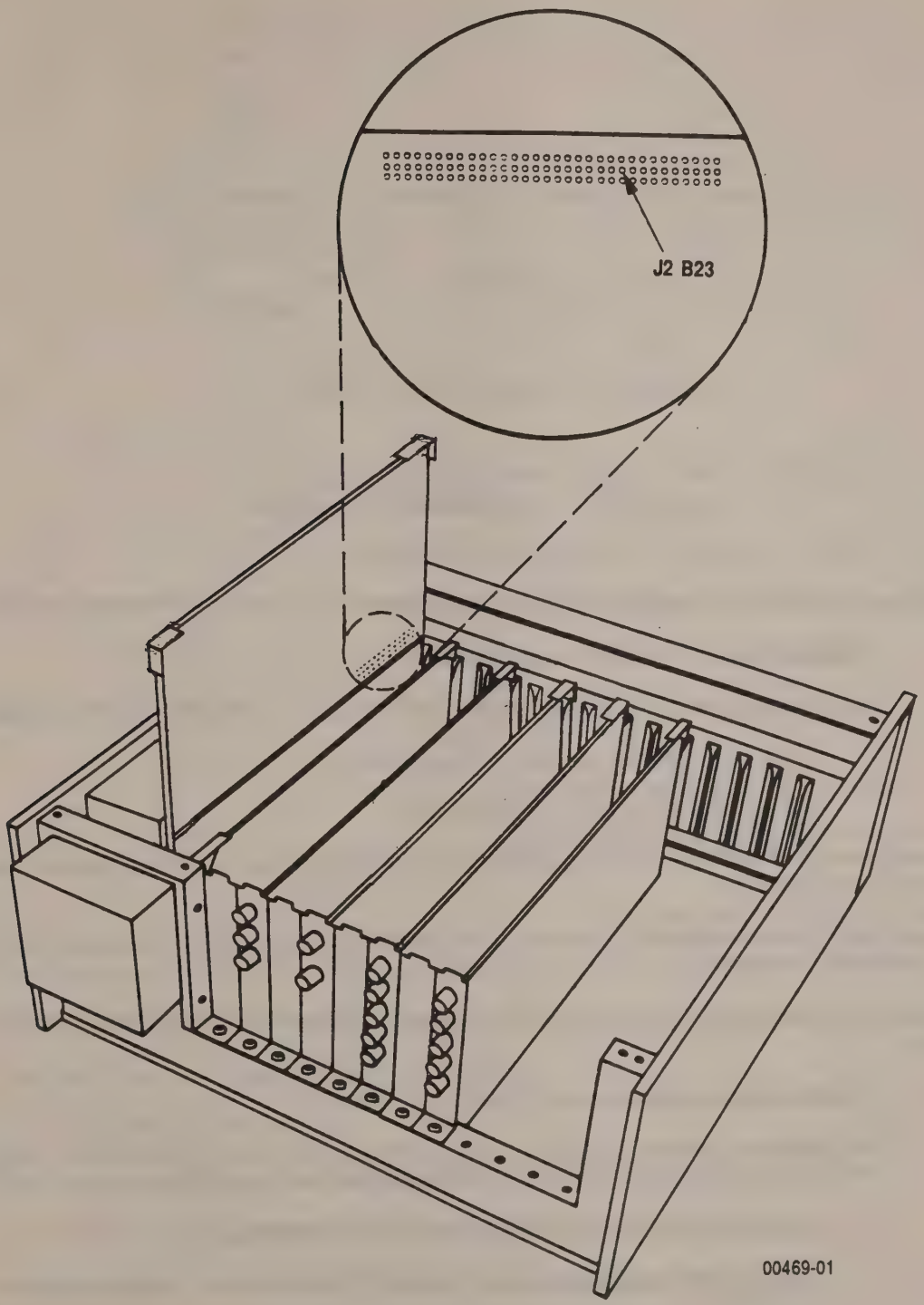

Figure 3.118. CPU Connector Location

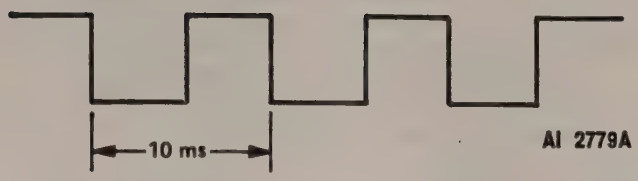

Figure 3.119. 10-Millisecond Clock Pulse

No 10-millisecond clock pulse at pin 4 of U26. Check U27, pin 13 for +5 volts, 10-millisecond clock pulse.

Clock pulse is at pin 13 of U27. Replace U26.

No clock pulse at pin 13 of U27. Check either pins 10 or 11 for +5 volts, 32 kHz sinusoidal signal.

Sine wave not at pin 10 or 11. Replace crystal Y1.

Sine wave is at pin 10 or 11. Replace U27.

Test Twenty checks the 50-millisecond latch signal. If Test Nineteen failed because of U27 on the real-time clock card, Test Twenty will also fail.

Test Twenty fails. On the real-time clock card, check pin 6 of buffer U26 on the real-time clock card for a +3.0 volts, 50-millisecond latch signal.

50-millisecond latch signal not at pin 6 of U26. Check output of U58, pin 5 for +5 volts 50-millisecond latch signal.

50-millisecond latch signal at pin 5 of U58. Replace U26.

No 50-millisecond latch signal at pin 5 of U58. Check pin 12 of signal divider U29 for +5 volts latch signal, 10 milliseconds wide, and 50 milliseconds apart, see Figure 3.120.

50-millisecond latch signal is at pin 12 of U29. Replace U58.

No 50-millisecond latch signal at pin 12 of U29. Check input pin 1 and pin 13 of U29 for +5 volts dc.

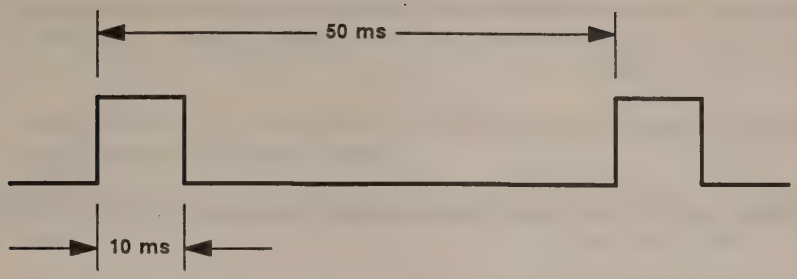

02803

Figure 3.120. Typical Latch Signal

No voltage at pin 13 or at pin 1 of U29. Check for +5 volts dc at input of pin 9 of U28.

No voltage at pin 9 of U28. Check mothercard, Section 3.3.19.

High voltage at pin 9 of U28. Check pin 1 of U49 for zero voltage.

Voltage zero at pin 1 of U49. Replace U28.

Voltage high at pin 1 of U49. Check pin 5 of U13 for voltage high.

Voltage low at pin 5 of U13. Replace U49.

Voltage high at pin 5 of U13. Check pin 13 of U13 for zero voltage.

Voltage high at pin 13 of U13. Replace U13.

Test Twenty-one checks the Dynamic Memory Access controller U24 on the CPU card.

Test Twenty-one fails. On CPU card, replace U24.

Test Twenty-two does not apply to the AT 9000. Ignore.

Test Twenty-three is the 'beeper' test.

Test Twenty-three fails. On the CPU card, replace U24 and rerun diagnostic sequence.

Test Twenty-three passes but beeper doesn't beep. On the CPU card, check that jumper J9 is in.

Jumper J9 is in. On the real-time clock card, replace beeper speaker SP1.

Test Twenty-four checks positions 0A0000H to 0AFFFFH of the non-volatile RAM, memory-bus interface and ready generation on the RTC card and memory bus drivers, memory address drivers, bus arbiter and the bus ready generation on the CPU card.

Test Twenty-four fails. Replace real-time clock card with a new card, or a card you know is good, and rerun diagnostic.

You don't have replacement card, or test fails after new card in put in. On real-time clock card, check pin 9 of U35 for a 10 MHz clock pulse.

No 10 MHz clock pulse at pin 9 of U35. Check pin 19 of U35 for logic low.

Logic low at pin 19 of U35. Replace U35.

Logic high at pin 19 of U35. Replace U54.

10 MHz clock pulse at pin 9 of U35. Replace in this order, and rerun diagnostic after each replacement, U1, U2, U39, U38, U40, U41, U54 and U44.

Test Twenty-five checks positions 0B0000H to 0BFFFFH for bank 0 of the non-volatile RAM, bus interface, ready generation and bank bit register of the RTC card, and the bus data drivers, bus address drivers, bus arbiters and bus ready generation on the CPU card.

If Test Twenty-four failed, Test Twenty-five will probably fail too.

If Test Twenty-four passed, and test Twenty-five failed, replace U3 and U4.

Test Twenty-six checks added RTC static RAM.

If Test Twenty-six fails, and Test Twenty-four passed, replace U5 and U6.

Test Twenty-seven also checks added RTC static RAM.

If Test Twenty-seven fails, and Test Twenty-four passed, replace U7 and U8.

Test Twenty-eight checks any application cards that are in place. You can read the checksums of each ROM on the CRT and then compare them with the checksums marked on the ROM chips.

After the diagnostic shows you the checksums, it will run a special diagnostics program for each card. You'll see the result of that on the screen also.

Depending on which version of the AT 9000 and which version of the diagnostics software you have, here's what you'll see on the screen.

NO CARD	--	Does not recognize card.
NO TEST	--	Recognized card, but doesn't have a test for it.
pass	--	Passed card test.
FAIL-XX	--	Card failed diagnostic test with code XX.

Any failure might be caused by input-output interface problems on the CPU, the mothercard, or the application card.

Test Twenty-nine does not apply to AT 9000. Ignore.

Test Thirty checks the CPU communication. Look at test 24 for any indication of memory bus problems, specifically arbitration.

This completes the diagnostic test for the AT 9000 Analyzer.

3.3.19 Mothercard

With only one exception, checking the mothercard is the last court of appeals for troubleshooting the AT 9000 Analyzer. When you can find nothing else wrong, or when finding and correcting problems doesn't alleviate the symptom, check the mothercard.

The exception: When using the optional printer, and it prints nothing, or it prints gibberish, check the mothercard before anything else. Other than that exception, check everything else first.

When you find no problem with the individual cards, or you find the problem and fix it, and still have malfunctions, carefully check all connectors that plug into the mothercard.

Other than that, return the analyzer to Scientific-Atlanta.

3.4 REGIONAL SERVICE CENTERS

Regional Service Centers capable of performing periodic maintenance and providing assistance associated with the AT 9000 Analyzer and other Scientific-Atlanta equipment are listed on the following pages. Service assistance for areas not listed can be provided through the Scientific-Atlanta Field Service Center, 3845 Pleasantdale Road, M/S ATL 10-V, Atlanta, Georgia 30340; TEL: 404-449-2174; Telex: 542898; TWX: 810-66-4912.

SCIENTIFIC-ATLANTA REGIONAL SERVICE CENTERS
NORTH AMERICAN

California:
10708 Norwalk Blvd.
Santa Fe Springs, CA 90670
Tel: 213-903-2622

2860 Zanker Road
Suite 101
San Jose, CA 95134
Tel: 408-433-0117

Colorado:
61 Inverness Drive E.
Suite 100
Englewood, CO 80112
Tel: 303-790-0585

Florida:
600 Thacker Avenue
Suite D43
Kissimmee, FL 32741
Tel: 305-846-0055

Georgia:
3845 Pleasantdale Road
M/S ATL 10-V
Atlanta, Georgia 30340
Tel: 404-903-2174

Maryland:
5000-F Philadelphia Way
Lanham, MD 20706
Tel: 301-577-4832

Massachusetts:
220 Ballardvale Street
Wilmington, MA 01887
Tel: 508-658-4310

New Jersey:
669 River Drive
Center Two
Elmwood Park, NJ 07407
Tel: 201-794-1454

Texas:
850 E. Arapaho Road
Suite 250
Richardson, TX 75081
Tel: 214-238-4300

Washington:
6632 S. 191st Street
Suite E105
Kent, WA 98032
Tel: 206-251-9114

02/92

SCIENTIFIC-ATLANTA
INTERNATIONAL SERVICE CENTERS

ENGLAND
Scientific-Atlanta, Ltd.
Home Park Estate
Kings Langley
Herts WD4 8LZ, England
Tel: 011-44-92-776-6133
Telex: 912044

GERMANY
Scientific-Atlanta GmbH
Albert Schweitzerstrasse 66
8000 Muenchen 83
Postfach 830935
West Germany
Tel: 011-49-89-678-0010
Telex: 5212264

FRANCE
Scientific-Atlanta S.A.
4 Avenue Gabriel Peri
78360 Montesson
Paris, France
Tel: 011-33-13-976-9191
Telex: 696385

ITALY
Scientific-Atlanta, S.p.A.
Via Benedetto Croce 19
00142 Roma, Italy
Tel: 011-39-6-542-0244
Telex: 621441

02/91

Chapter 4
PARTS LIST

4.1 INTRODUCTION

This chapter provides parts lists which support the assembly drawings located in Chapter 7 of this manual.

4.2 PARTS LIST AND ASSEMBLY DRAWINGS

The parts list describes the parts referenced or illustrated by the assembly drawings. Use the information for identifying and requisitioning parts, and as an aid in disassembly/assembly procedures. Parts lists in this chapter are arranged in numerical order by assembly number. When a drawing has a parts list on the drawing, the parts list is not repeated in this chapter.

4.2.1 Explanation of Title Block on Parts Listing

Each parts list starts at the top of the page with a title block. The title block contains the assembly number, assembly title, the latest revision level at the time this manual was published and the date the revision became effective. Whenever a parts list is longer than one page the title block is repeated on the following page(s) until the list is complete.

4.2.2 Explanation of Parts Lists Column Headings

The parts list is separated into main groups or assemblies and keyed to associated assembly drawing(s) by item or find number and/or reference designation.

a. REF. This column lists the item, find number, or reference designation by which each part is called out on the illustration related to the parts list. Reference designation may also be found on the applicable schematic diagram.

b. SA PART. This column contains the Scientific-Atlanta part number.

c. QTY. This column contains the number of units of this part in the group or assembly.

d. DESCRIPTION. This column contains a brief description of the part.

e. MFR PART. This column contains the manufacturer's part number or additional description.

f. CAGE. This column contains the Commercial And Government Entity (CAGE) code of the component listed. Use the H4/H8 Commercial And Government Entity publication to identify the manufacturer.

4.3 PARTS LIST INDEX

A parts list index is provided in Table 6-1. The index is sorted numerically by part number. The part number is listed in the left column. The current revision level is listed in the second column. A dash indicates the original release of the drawing and parts list. The parts list description is listed in the center column and page numbers are listed in the right column.

Table 4-1. Parts List Index

Part Number	Rev.	Description	Page
306176	-	ASSY POWER HARNESS DAS AC	4-5
306180	-	ASSY FAN AC DAS	4-6
306198	-	ASSY RTC/TERMINATOR	4-7
306220	B	ASSY DAS AC/DC MDL AT9000	4-8
307218	C	SUB-ASSY PWB CPU DTA	4-10
307223	K	SUB-ASSY PWB DS3-DS1/DS0 DEMUX	4-14
309124	F	ASSY PWB XMTR DAS	4-21
309216	-	CBL ASSY MTRS/LIMS 3-AX L=AIR	4-22
309237	F	SUB-ASSY PWB XMTR MDL AT9500	4-23
309242	C	SUB-ASSY PWB DS3 2-PT MONITOR	4-27
309243	C	ASSY PWB DS3 2-PT MONITOR	4-34
309649	-	ASSY POWER CORD AT9500	4-35
327980	G	SUB-ASSY PWB DS3 2X2	4-36
328077	T	ASSY PWB DEMUX DAS	4-43
328078	F	ASSY PWB DS3 2X2	4-44
328079	E	ASSY PWB ANALOG DAS	4-45
456206	-	ASSY PWB POWER SUPPLY AC DAS	4-46
456211	B	SUB-ASSY DS1 2X2	4-49
456212	E	ASSY PWB DS1 2X2	4-55
456224	B	SUB-ASSY DS1 2-POINT MONITOR	4-56

Table 4-1. Parts List Index

Part Number	Rev.	Description	Page
456225	D	ASSY PWB DS1 2-POINT MONITOR	4-62
456987	-	ASSY POWER SUPPLY AC DAS	4-63
458359	A	SUB-ASSY PWB RTC DTA	4-64
459033	-	ASSY PWB MOTHERBOARD DAS	4-69
459041	D	ASSY PWB CPU DAS	4-74
306178	B	ASSY PWB POWER SUPPLY AC DAS	4-75
306187	-	ASSY POWER SUPPLY AC DAS	4-77
307219	R	ASSY PWB CPU DTA	4-78
327887	H	SUB-ASSY PWB RTC DTA	4-79
327890	B	SUB-ASSY PWB DS1/DS3 XMTR DTA	4-84
327968	F	ASSY PWB RTC DTA	4-89
328076	C	ASSY PWB XMTR DAS	4-90
328086	A	ASSY PWB MOTHEROARD DAS	4-91

4.4 ORDERING PARTS

When ordering parts from Scientific-Atlanta, always include the Scientific-Atlanta part number, the part description, the unit serial number, unit name, subassembly, part manufacturer, and manufacturer's part number.

This page intentionally blank

A306176 ASSY POWER HARNESS DAS AC A306176

Revision -
Effective: July 01, 1990

REF	SA PART	Qty	Description	Mfr Part	CAGE
FL001	A177350	001.00 EA	FILTER AC LINE 10A 115/250VAC	A10GEN1C13	
P001	A177096	001.00 EA	CONN FLAT CABLE 12-CONF FEM .156CTR	CLG-1012-00101D	
P002	A174928	001.00 EA	CONN RECT M T 3 POS 22AWG .100	CE100F 22-3	
P003	A082619	001.00 EA	CONN RECT BDY W/O CONT 2P RECP	MOL #03-06-1023	
S001	A177354	001.00 EA	SWITCJ RCKR 4PST ON-NON OFF10A	TIIK50-1L-BL-G	
XD001	A089379	001.00 EA	LAMP LED HOLDER WITH COLLAR	DI 508-7538-504	
001	A177355	004.00 EA	CONN MISC WIRE JT N-LNINS22-18	PAN #BSN18	
002	A174929	001.00 EA	CONN RECT M T COV FOR 3 P .100	PAN EC 100F-3	
003	A084999	002.00 EA	CONN CONTACT #18-24AWG FEM FOR PN 84997	MOL #02-06-1103	
004	A177352	003.00 EA	TERM QK DISC INS 16-14 FEM.187	PAN DNF14-187	
005	A073013	001.00 EA	TERMINAL GND INT TOOTH NO6 ANGLED	SH 1416-6	
006	A073045	009.00 EA	CABLE TIE - MINIATURE - 4 IN. LONG	PAN PLT1M-M	
007	A077938	000.80 FT	TUBING HEAT SHRINK .375ID SHRINKS TO .187 UL V	FIT-221V-3/8 BLACK	
008	A328120	001.00 FT	TUBING POLYSTR EXPAND 11/4 BLK	LAN #XS100-1 1/4 BLK	
009	A073387	001.25 FT	WIRE 22 STRANDED RED	LAN #LB22-1934 RED	
010	A073389	001.25 FT	WIRE 22 STRANDED YELLOW	LAN #LB22-1934 YELLO	
011	A073393	002.00 FT	WIRE 22 STRANDED GRAY	LAN#LB22-1934 GRAY	
012	A073404	002.00 FT	WIRE 22 STRANDED WHITE/GRAY	LANCE #LB22-1934 WHT	
013	A073355	001.10 FT	WIRE 18 STRANDED GRAY	LAN #LC18-1930 GRAY	
014	A073365	001.10 FT	WIRE 18 STRANDED WHITE/GRAY	LAN #LC18-1930 WHT/G	
015	A073340	002.50 FT	WIRE 16 STRANDED GRAY	LAN#LC16-1929 GRAY	
016	A073347	002.50 FT	WIRE 16 STRANDED WHITE/GRAY	LAN #LC16-1929 WHT/G	
017	A073337	001.30 FT	WIRE 16 STRANDED GREEN	LAN#LC16-1929 GREEN	

A306180 ASSY FAN AC DAS A306180

Revision -
Effective: July 01, 1990

REF	SA PART	Qty	Description	Mfr Part	CAGE
001	A177347	001.00 EA	FAN 3.64IN BRG 115VAC13W 46CFM	W2S086-AA07-01	
002	A082617	001.00 EA	CONN RECT BODY W/O CONTACTS	MOL #03-06-2023	
003	A084998	002.00 EA	CONN CONTACT #18-24AWG MALE FOR PN 84997	MOL #02-06-2103	

A306198 ASSY RTC/TERMINATOR A306198

Revision -
Effective: July 01, 1990

REF	SA PART	Qty	Description	Mfr Part	CAGE
A001	A306216	001.00 EA	ASSY PWB RTC DAS		
A002	A328093	001.00 EA	PWB ASSY TERMINATOR		
001	A072303	004.00 EA	SCREW 2-56 X 5/8 PAN HD,SST	ATY PER DESC 072303	
002	A077181	004.00 EA	WASHER NO. 2 LOCK, SPLIT, CAD PLT STL	ATY BY DESC. 077181	
003	A076137	004.00 EA	WASHER-NO. 3- .109 .219 .025 AUS SST	ATY 076137	
004	A071493	004.00 EA	NUT 2-56 UNC-2B,PLAIN-HEX,SST	PER MS35649-224	
005	A084819	000.00 OZ	ADHESIVE NUT LOCK LCKNG-RTNG 50 CC BOT	LOC 242 - 31	
006	A306203	001.00 EA	LABEL RTC/TERMINATOR ASSY		

A306220 ASSY DAS AC/DC MDL AT9000 A306220

Revision B
Effective: November 20, 1991

REF	SA PART	Qty	Description	Mfr Part	CAGE
	A309649	000.00 EA	ASSY POWER CORD AT9500		
	A320048	000.00 EA	OPERATORS MANUA: AT9000	PER SA 320048	
	A327953	000.00 EA	ASSY POWER CABLE DTA	CBL ASSY PER #327953	
	M458422	000.00 EA	PKG INSTRUCTIONS MOD AT9000	PER SA DWG 458422	42061
	M458423	001.00 EA	PKG FOAM END CAP SET AT9000	PER SA DWG 458423	42061
	A071236	000.00 EA	FUSE 10 AMP 250 VOLT	SOI CES4-10A	
	A076785	000.00 EA	FUSE 5 AMP	L 3AB-314005	
	A080558	000.00 RL	BAG, PLASTIC 3 X 4 MINI GRIP, ZIP LIP	KHL PER DESC 080558	
	A086425	000.00 EA	BAG PLASTIC 9X12 1/2 2-MIL PLAIN AUTOBAG	KHL PER DESC 086425	
	A177364	000.00 EA	FUSE 10A 250V 5X20MM HI INTCPT	LTF 216010	
A014	A459041	001.00 EA	ASSY PWB CPU DAS		
A015	A306216	001.00 EA	ASSY PWB RTC DAS		
B001	A456995	001.00 EA	ASSY FAN AT9000		
DS001	A086973	001.00 EA	LAMP LED GRN CRTDG W/GRN LENS 5V 20MA	DI 507-4857-3332-500	
F001	A177364	002.00 EA	FUSE 10A 250V 5X20MM HI INTCPT	LTF 216010	
F002	A076785	001.00 EA	FUSE 5 AMP	L 3AB-314005	
F003	A076785	001.00 EA	FUSE 5 AMP	L 3AB-314005	
W001	A306206	001.00 EA	ASSY POWER HARNESS DAS AC/DC	WIRETECH PER #306206	
XF001	A177357	001.00 EA	CONN AC MALE 3-COND FUSE-HLDR	KEA #4301.1214.08	
001	A459033	001.00 EA	ASSY PWB MOTHERBOARD DAS		
002	A456988	001.00 EA	ASSY POWER SUPPLY AC/DC DAS		
003	A328053	001.00 EA	DAS ENCLOSURE CHASSIS	PER SA DESC	
004	A328059	002.00 EA	FRAME SIDE MODIFICIATION	PER SA DESC	
005	A327895	002.00 EA	BRACKET CORNER REAR DTA	PER SA DESC	
006	A327896	002.00 EA	BRACKET CORNER FRONT DTA	PER DWG. 327896	
007	A328082	002.00 EA	TOP MTG BRACKET	PER SA DESC	
008	A458402	001.00 EA	CARD SUPPORT FRAME	PER SA DWG 458402	42061
009	A328052	001.00 EA	CARD GUIDE BRACKET	PER SA DWG.	
009	A309238	001.00 EA	BRACKET, CARDGUIDE AT9000	PER SA DWG.	
010	A328066	001.00 EA	FRONT PANEL	PER SA DESC	
011	A220573	002.00 EA	BEZEL,17 IN. WIDE CHASSIS	PER DWG. 220573	
012	A306184	002.00 EA	PANEL SIDE DAS	PER SA DESC	
013	A328065	000.00 EA	SIDE COVER	PER SA DESC	
014	A328050	001.00 EA	BOTTOM COVER	PER SA DESC	
015	A328051	000.00 EA	TOP COVER	PER SA DESC	
016	A328094	001.00 EA	CONNNECTOR PANEL BLANK	PER SA DESC	
017	A458401	001.00 EA	FAN COVER	PER SA DWG.	
018	A089520	001.00 EA	FAN FILTER SCREEN FOR MINI BOXER	060007	
019	A083052	015.00 EA	GUIDE PC BOARD 3.0 LONG .125 THK	SCN#23071-2	
020	A158086	004.00 EA	FILLER,HANDLE MODEL 4647	ONT 158086	
021	A327937	002.00 EA	FILLER HANDLE DTA	PER SA DWG.	
022	A328057	001.00 EA	PC BOARD RETAINER	PER SA DESC	
023	A328069	001.00 EA	LABEL SLOT ASSIGNMENT DAS	SLB PER #328069	
024	A177204	000.00 EA	FOOT PLASTIC BLACK NON-SLIP	SCRX 10603-026	
025	A328088	002.00 EA	FILLER STRIP REAR PNL	PER SA DESC	
026	A328095	001.00 EA	BOARD RETENTION PLATE	PER SA DWG.	
027	A177169	001.00 EA	CONN AC 1 OTLT 3-CON SNAP -IN	AMP #208697-2	
028	A177356	001.00 EA	CONN AC MALE 3-COND BODY177357	KEA #4301.0023	
029	A306192	001.00 EA	LABEL SW BAUD RATE HDW HNDSHKE	SLB PER #306192	42061
030	A079833	001.00 EA	FAN FINGER GUARD	476143	
031	A078988	004.00 EA	SCREW 4-40 X 3/16 F HD,100 DEG,SST	ATY MS24693-C1	
032	A327494	000.00 EA	ENCLOSURE MTG ANGLE 23IN DAS	PER SA DWG.	
033	A072317	016.00 EA	SCREW 4-40 X 1/4 PAN HD,SST	ATY 72317	
034	A073265	016.00 EA	WASHER NO. 4 LOCK EXT TOOTH CAD PLT STL	PER MS35335-29	96906
035	A072297	011.00 EA	SCREW 2-56 X 1/4 PAN HD,SST	ATY 72297	

A306220 ASSY DAS AC/DC MDL AT9000 A306220

Revision B
Effective: November 20, 1991

REF	SA PART	Qty	Description	Mfr Part	CAGE
036	A072299	008.00 EA	SCREW 2-56 X 3/8 PAN HD,SST	ATY 72299	
037	A073263	013.00 EA	WASHER NO. 2 LOCK EXT TOOTH CAD PLT STL	PER ANSI B.18.21.1	
038	A176012	012.00 EA	WASHER-NO.2- .093 .156 .020 SS	SEASTROM 5710-6-20P	
039	A079880	006.00 EA	SCREW 6-32 X 3/16 PAN HD,SST	ATY BY DESCRIPTION	
040	A072352	010.00 EA	SCREW 6-32 X 1/4 F HD,82 DEG,SST	ATY MS51959-26	
041	A072358	016.00 EA	SCREW 6-32 X 3/8 F HD,82 DEG,SST	ATY PER DESC 072358	
042	A072363	005.00 EA	SCREW 6-32 X 3/8 PAN HD,SST	ATY PER DESC 072363	
043	A075769	004.00 EA	SCREW 6-32 X 1 1/2 PAN HD,SST	ATY MS51957-36	
044	A072367	001.00 EA	SCREW 6-32 X 1/2 PAN HD,SST	ATY MS-51957-30	
045	A087493	008.00 EA	SCREW 6-32 X 3/8 OVAL CSK HD 82 DEG SST	ATY 087493	
046	A073269	006.00 EA	WASHER NO. 6 LOCK EXT TOOTH CAD PLT STL	PER ANSI B.18.21.1	
047	A072389	008.00 EA	SCREW 8-32 X 1/4 F HD,82 DEG,SST,UNDRCUT	ATY MS-51959-41	
048	A177367	008.00 EA	SCREW 10-32 X7/16 FH,82DEG	ATY PER DESC 177367	
049	A175490	002.00 PR	CONN MISC JACKSKT ASSY PR SHT	3341-1S	
050	A173745	001.00 EA	CONN MISC JACKSOCKET KIT IEEE 488 TYPE	MMM 3341-3	
051	A076423	002.00 EA	PLUG HOLE 1/2 DIA HOLE NI PLT STL	CRR SS48152 - K1110	
052	A075446	001.00 EA	NUT 6-32 UNC-2B,PLAIN-HEX,SST	PER MS35649-264	
053	A306188	001.00 EA	DECAL SERIAL NUMBER MDL AT9000		
054	A084819	000.00 OZ	ADHESIVE NUT LOCK LCKNG-RTNG 50 CC BOT	LOC 242 - 31	
055	A077473	002.30 FT	TAPE SPR 1/4 THK X 1.0 W ADHSV	RH 76150PS	
056	A077932	000.00 EA	SCREW 6-32 X 5/16 PAN HD,SST	ATY MS51957-27	
057	A306205	001.00 EA	CARD CARRIER TERMINATOR PWB	PER SA DWG.	
060	A221028	001.00 EA	CUSHION, FRONT PANEL MTG SERIES 4650	ATU 221028	
061	A077181	014.00 EA	WASHER NO. 2 LOCK, SPLIT, CAD PLT STL	ATY BY DESC. 077181	
062	A078953	000.01 FT	ADHESIVE SUPER BONDER 495 3 GRAM TUBE	MHI LOC-495-04	
063	A076356	004.00 EA	SCREW 2-56 X 3/4 PAN HD,SST	ATY PER DESC 076356	

A307218 SUB-ASSY PWB CPU DTA A307218

Revision C
Effective: July 10, 1990

REF	SA PART	Qty	Description	Mfr Part	CAGE
	A307216	000.00 EA	SCHEMATIC PWB CPU DTA		
BB001	A177102	001.00 EA	BUS DISTRBTN 2-LYR VERT MT 36-PIN IN-LINE	RAZ QV-2 17.6.3 (.1)	
CR001	A071122	001.00 EA	DIODE 1N914 SIL 75V 75MA	1N914	
CR002	A071122	001.00 EA	DIODE 1N914 SIL 75V 75MA	1N914	
C001	A080139	001.00 EA	CAPACITR .1 MF 50V CER MONO -20%/+80%	RPE122Z5U104Z050V	
C002	A080139	001.00 EA	CAPACITR .1 MF 50V CER MONO -20%/+80%	RPE122Z5U104Z050V	
C003	A080139	001.00 EA	CAPACITR .1 MF 50V CER MONO -20%/+80%	RPE122Z5U104Z050V	
C004	A080139	001.00 EA	CAPACITR .1 MF 50V CER MONO -20%/+80%	RPE122Z5U104Z050V	
C005	A080139	001.00 EA	CAPACITR .1 MF 50V CER MONO -20%/+80%	RPE122Z5U104Z050V	
C006	A080139	001.00 EA	CAPACITR .1 MF 50V CER MONO -20%/+80%	RPE122Z5U104Z050V	
C007	A080139	001.00 EA	CAPACITR .1 MF 50V CER MONO -20%/+80%	RPE122Z5U104Z050V	
C008	A081926	001.00 EA	CAPACITR 10 PF 500V CER DISC COH +-.25P	831-000-COH0-100C	
C009	A081792	001.00 EA	CAPACITR 30 PF 100V CER DISC U1G 5%	805-024-U1G0-300J	
C010	A080139	001.00 EA	CAPACITR .1 MF 50V CER MONO -20%/+80%	RPE122Z5U104Z050V	
C011	A080139	001.00 EA	CAPACITR .1 MF 50V CER MONO -20%/+80%	RPE122Z5U104Z050V	
C012	A080139	001.00 EA	CAPACITR .1 MF 50V CER MONO -20%/+80%	RPE122Z5U104Z050V	
C013	A080139	001.00 EA	CAPACITR .1 MF 50V CER MONO -20%/+80%	RPE122Z5U104Z050V	
C014	A080139	001.00 EA	CAPACITR .1 MF 50V CER MONO -20%/+80%	RPE122Z5U104Z050V	
C015	A086133	001.00 EA	CAPACITR .047 MF 50V CER MONO X7R 10%	RPE121X7R473K50V	
C016	A080139	001.00 EA	CAPACITR .1 MF 50V CER MONO -20%/+80%	RPE122Z5U104Z050V	
C017	A080139	001.00 EA	CAPACITR .1 MF 50V CER MONO -20%/+80%	RPE122Z5U104Z050V	
C018	A080139	001.00 EA	CAPACITR .1 MF 50V CER MONO -20%/+80%	RPE122Z5U104Z050V	
C019	A080139	001.00 EA	CAPACITR .1 MF 50V CER MONO -20%/+80%	RPE122Z5U104Z050V	
C020	A080139	001.00 EA	CAPACITR .1 MF 50V CER MONO -20%/+80%	RPE122Z5U104Z050V	
C021	A080139	001.00 EA	CAPACITR .1 MF 50V CER MONO -20%/+80%	RPE122Z5U104Z050V	
C022	A080139	001.00 EA	CAPACITR .1 MF 50V CER MONO -20%/+80%	RPE122Z5U104Z050V	
C023	A080139	001.00 EA	CAPACITR .1 MF 50V CER MONO -20%/+80%	RPE122Z5U104Z050V	
C024	A035656	001.00 EA	CAPACITR 100 MF 20V 10% SOLID TANT POL	T354M107K020AS	
C025	A035656	001.00 EA	CAPACITR 100 MF 20V 10% SOLID TANT POL	T354M107K020AS	
C026	A080139	001.00 EA	CAPACITR .1 MF 50V CER MONO -20%/+80%	RPE122Z5U104Z050V	
DS001	A177211	001.00 EA	LAMP LED-RSTR RED PC MT 5V 3MA	555-2007	
DS002	A177211	001.00 EA	LAMP LED-RSTR RED PC MT 5V 3MA	555-2007	
DS003	A177211	001.00 EA	LAMP LED-RSTR RED PC MT 5V 3MA	555-2007	
DS004	A177211	001.00 EA	LAMP LED-RSTR RED PC MT 5V 3MA	555-2007	
DS005	A177211	001.00 EA	LAMP LED-RSTR RED PC MT 5V 3MA	555-2007	
DS006	A177211	001.00 EA	LAMP LED-RSTR RED PC MT 5V 3MA	555-2007	
DS007	A177211	001.00 EA	LAMP LED-RSTR RED PC MT 5V 3MA	555-2007	
DS008	A177211	001.00 EA	LAMP LED-RSTR RED PC MT 5V 3MA	555-2007	
E001	A177971	001.00 EA	CHOKE WIDE-BAND 3B .236X394L	VK20009-3B	
E002	A177971	001.00 EA	CHOKE WIDE-BAND 3B .236X394L	VK20009-3B	
J001	A173712	001.00 EA	CONN RECT 96-COND MALE PNL MT RT ANG PC MT	532505-1	00779
J002	A173712	001.00 EA	CONN RECT 96-COND MALE PNL MT RT ANG PC MT	532505-1	00779
J003	A078600	000.00 FT	NOT ASSIGNED	FOR ENG ONLY	
J004	A078600	000.00 FT	NOT ASSIGNED	FOR ENG ONLY	
J005	A078600	000.00 FT	NOT ASSIGNED	FOR ENG ONLY	
J006	A078600	000.00 FT	NOT ASSIGNED	FOR ENG ONLY	
J007	A087366	001.00 EA	CONN HDR SGL ROW STR 3-PIN PC MT OPEN .318 HT	87220-3	00779
J008	A174000	000.00 EA	NOT USED ON THIS ASSEMBLY		
J009	A087229	001.00 EA	CONN HEADER SGL ROW STRAIGHT 2-PIN PC MT	87220-2	00779
J010	A078600	000.00 FT	NOT ASSIGNED	FOR ENG ONLY	
J011	A174000	000.00 EA	NOT USED ON THIS ASSEMBLY		
J012	A174000	000.00 EA	NOT USED ON THIS ASSEMBLY		
J013	A174000	000.00 EA	NOT USED ON THIS ASSEMBLY		
P008	A174000	000.00 EA	NOT USED ON THIS ASSEMBLY		
P009	A086884	001.00 EA	JUMPER FEMALE INSULATED .10 SPACING	65474-004	

A307218 SUB-ASSY PWB CPU DTA A307218

Revision C
Effective: July 10, 1990

REF	SA PART	Qty	Description	Mfr Part	CAGE
P011	A174000	000.00 EA	NOT USED ON THIS ASSEMBLY		
R001	A174949	001.00 EA	RESISTOR 10.0K OHM 1/4W 1% MTL FLM	CCF-551002F	
R001	A072026	001.00 EA	RESISTOR 10K OHM 1/4W 10% COMP	RCR07G103KS-T&R	
R001	A074727	001.00 EA	RESISTOR 10K OHM 1/4W 5% COMP	RCR07G103JS	
R002	A074727	001.00 EA	RESISTOR 10K OHM 1/4W 5% COMP	RCR07G103JS	
R002	A072026	001.00 EA	RESISTOR 10K OHM 1/4W 10% COMP	RCR07G103KS-T&R	
R002	A174949	001.00 EA	RESISTOR 10.0K OHM 1/4W 1% MTL FLM	CCF-551002F	
R003	A178335	001.00 EA	RESISTOR 33.2 OHM 1/4W 1% 100PPM MTL FLM	5043ED33R20F	
R004	A072026	001.00 EA	RESISTOR 10K OHM 1/4W 10% COMP	RCR07G103KS-T&R	
R004	A074727	001.00 EA	RESISTOR 10K OHM 1/4W 5% COMP	RCR07G103JS	
R004	A174949	001.00 EA	RESISTOR 10.0K OHM 1/4W 1% MTL FLM	CCF-551002F	
R005	A178241	001.00 EA	RESISTOR 1.00K OHM 1/4W 1% 100PPM MTL FLM	5043ED1K000F	
R006	A072026	001.00 EA	RESISTOR 10K OHM 1/4W 10% COMP	RCR07G103KS-T&R	
R006	A174949	001.00 EA	RESISTOR 10.0K OHM 1/4W 1% MTL FLM	CCF-551002F	
R006	A074727	001.00 EA	RESISTOR 10K OHM 1/4W 5% COMP	RCR07G103JS	
R007	A178335	001.00 EA	RESISTOR 33.2 OHM 1/4W 1% 100PPM MTL FLM	5043ED33R20F	
R008	A178335	001.00 EA	RESISTOR 33.2 OHM 1/4W 1% 100PPM MTL FLM	5043ED33R20F	
R009	A178335	001.00 EA	RESISTOR 33.2 OHM 1/4W 1% 100PPM MTL FLM	5043ED33R20F	
R010	A072026	001.00 EA	RESISTOR 10K OHM 1/4W 10% COMP	RCR07G103KS-T&R	
R010	A174949	001.00 EA	RESISTOR 10.0K OHM 1/4W 1% MTL FLM	CCF-551002F	
R010	A074727	001.00 EA	RESISTOR 10K OHM 1/4W 5% COMP	RCR07G103JS	
R011	A074727	001.00 EA	RESISTOR 10K OHM 1/4W 5% COMP	RCR07G103JS	
R011	A174949	001.00 EA	RESISTOR 10.0K OHM 1/4W 1% MTL FLM	CCF-551002F	
R011	A072026	001.00 EA	RESISTOR 10K OHM 1/4W 10% COMP	RCR07G103KS-T&R	
S001	A173960	001.00 EA	SWITCH SPST 8 POS DIP RT ANGLE W/ SEAL	206-8RAST	
U001	A173221	001.00 EA	IC CMOS GATE NAND 2-IN QUAD	NSC MM74HC00N	
U002	A084000	000.00 EA	VARIES WITH MODEL,SEE HIGHER ASSY FOR PN	PER S A DWG	
U003	A084000	000.00 EA	VARIES WITH MODEL,SEE HIGHER ASSY FOR PN	PER S A DWG	
U004	A084000	000.00 EA	VARIES WITH MODEL,SEE HIGHER ASSY FOR PN	PER S A DWG	
U005	A084000	000.00 EA	VARIES WITH MODEL,SEE HIGHER ASSY FOR PN	PER S A DWG	
U006	A089428	001.00 EA	RESISTOR NETWORK 9 10K OHM 2% 10 SIP	BLI 4310R-101-103	
U007	A089428	001.00 EA	RESISTOR NETWORK 9 10K OHM 2% 10 SIP	BLI 4310R-101-103	
U008	A177005	001.00 EA	IC MICROPRCSR 16BIT NMOS 10MHZ	CS80C286-10	
U009	A087091	001.00 EA	RESISTOR NETWORK 9 1K OHM 2% 10 SIP	BLI 4310R-101-102	
U010	A177008	001.00 EA	IC PC/AT COMPATIBLE MEMRY CONT	VLSX VL82C102-QC	
U011	A089428	001.00 EA	RESISTOR NETWORK 9 10K OHM 2% 10 SIP	BLI 4310R-101-103	
U012	A177007	001.00 EA	IC PC/AT COMPATIBLE SYSTM CONT	VLSX VL82C101-QC	
U013	A089428	001.00 EA	RESISTOR NETWORK 9 10K OHM 2% 10 SIP	BLI 4310R-101-103	
U014	A171880	001.00 EA	IC TTL GATE INVERTER HEX	74F04N	
U015	A171598	001.00 EA	IC TTL GATE NAND 3-IN TRIPLE	74F10PC	
U016	A176979	001.00 EA	IC DLY LINE HYB/TTL 50NS TAP	MDLDM-TTL-50	
U017	A176273	001.00 EA	IC TTL GATE AND 3_IN TRIPLE	MOS 74F11N	
U018	A089838	001.00 EA	RESISTOR NETWORK 9 100K OHM 2% 10 SIP	BLI 4310R-101-104	
U019	A170207	001.00 EA	IC TTL GATE OR 2-IN QUAD	74F32PC	13715
U020	A330211	001.00 EA	IC CMOS BUFFER OCTAL	MM74HC244N	
U021	A174242	001.00 EA	IC CMOS FLIP-FLOP TYPE-D OCTAL	CD74HC273N	
U022	A089428	001.00 EA	RESISTOR NETWORK 9 10K OHM 2% 10 SIP	BLI 4310R-101-103	
U023	A177009	001.00 EA	IC PC/AT COMPATIBLE ADDRS BUFR	VLSX VL82C103-QC	
U024	A177006	001.00 EA	IC PC/AT COMPATIBLE PRPHL CONT	VL82C100-QC	
U025	A177010	001.00 EA	IC PC/AT COMPATIBLE DATA BUFFR	VLSX VL82C104-QC	
U026	A088089	001.00 EA	RESISTOR NETWORK 9 2.2K OHM 2% 10 SIP	DP MSP10A-01-222G	
U027	A088089	001.00 EA	RESISTOR NETWORK 9 2.2K OHM 2% 10 SIP	DP MSP10A-01-222G	
U028	A174892	001.00 EA	RES NTWK 8 33 OHM 2% 16 DIP	BLI 4116R-001-330	
U029	A176983	001.00 EA	IC MEMORY CMOS RAM 256K X 4 120NS	TMS-44C256-12NL	

A307218 SUB-ASSY PWB CPU DTA A307218

Revision C
Effective: July 10, 1990

REF	SA PART	Qty	Description	Mfr Part	CAGE
U030	A176983	001.00 EA	IC MEMORY CMOS RAM 256K X 4 120NS	TMS-44C256-12NL	
U031	A176983	001.00 EA	IC MEMORY CMOS RAM 256K X 4 120NS	TMS-44C256-12NL	
U032	A176983	001.00 EA	IC MEMORY CMOS RAM 256K X 4 120NS	TMS-44C256-12NL	
U033	A176984	001.00 EA	IC MEM NMOS RAM 256KX1 120NS D	TMS 4256-12NL	
U034	A176984	001.00 EA	IC MEM NMOS RAM 256KX1 120NS D	TMS 4256-12NL	
U035	A177243	001.00 EA	IC CMOS BUFFER OCTL N-INV 3-ST	CD74AC244E	
U036	A089428	001.00 EA	RESISTOR NETWORK 9 10K OHM 2% 10 SIP	BLI 4310R-101-103	
U037	A177244	001.00 EA	IC CMOS BFR/LINE DRIVER 10-B INVERT	AM29C828PC	
U038	A177003	001.00 EA	IC CMOS TRANSCVR BUS 10-BIT	AM29C861APC	
U039	A177003	001.00 EA	IC CMOS TRANSCVR BUS 10-BIT	AM29C861APC	
U040	A178541	001.00 EA	IC CMOS BUFFER/LINE DR 10-BIT	AMD #AM 29C 827APC	
U041	A178541	001.00 EA	IC CMOS BUFFER/LINE DR 10-BIT	AMD #AM 29C 827APC	
U042	A178541	001.00 EA	IC CMOS BUFFER/LINE DR 10-BIT	AMD #AM 29C 827APC	
U043	A174111	001.00 EA	IC CMOS LATCH 8-BIT 3-STATE	RCA CD74HC373E	
U044	A084000	000.00 EA	VARIES WITH MODEL,SEE HIGHER ASSY FOR PN	PER S A DWG	
U045	A089428	001.00 EA	RESISTOR NETWORK 9 10K OHM 2% 10 SIP	BLI 4310R-101-103	
U046	A177244	001.00 EA	IC CMOS BFR/LINE DRIVER 10-B INVERT	AM29C828PC	
U047	A177003	001.00 EA	IC CMOS TRANSCVR BUS 10-BIT	AM29C861APC	
U048	A177003	001.00 EA	IC CMOS TRANSCVR BUS 10-BIT	AM29C861APC	
U049	A178541	001.00 EA	IC CMOS BUFFER/LINE DR 10-BIT	AMD #AM 29C 827APC	
U050	A178541	001.00 EA	IC CMOS BUFFER/LINE DR 10-BIT	AMD #AM 29C 827APC	
U051	A177243	001.00 EA	IC CMOS BUFFER OCTL N-INV 3-ST	CD74AC244E	
U052	A089428	001.00 EA	RESISTOR NETWORK 9 10K OHM 2% 10 SIP	BLI 4310R-101-103	
U053	A084000	000.00 EA	VARIES WITH MODEL,SEE HIGHER ASSY FOR PN	PER S A DWG	
U054	A084000	000.00 EA	VARIES WITH MODEL,SEE HIGHER ASSY FOR PN	PER S A DWG	
U055	A084000	000.00 EA	VARIES WITH MODEL,SEE HIGHER ASSY FOR PN	PER S A DWG	
U056	A084000	000.00 EA	VARIES WITH MODEL,SEE HIGHER ASSY FOR PN	PER S A DWG	
U057	A089428	001.00 EA	RESISTOR NETWORK 9 10K OHM 2% 10 SIP	BLI 4310R-101-103	
U058	A177243	001.00 EA	IC CMOS BUFFER OCTL N-INV 3-ST	CD74AC244E	
XU002	A086652	001.00 EA	SOCKET 28 PIN DIP PC MT	RBN ICT-286-S-TG	
XU003	A086652	001.00 EA	SOCKET 28 PIN DIP PC MT	RBN ICT-286-S-TG	
XU004	A086652	001.00 EA	SOCKET 28 PIN DIP PC MT	RBN ICT-286-S-TG	
XU005	A086652	001.00 EA	SOCKET 28 PIN DIP PC MT	RBN ICT-286-S-TG	
XU008	A177011	001.00 EA	SOCKET 68 POS PLCC PC MT	PLCC-68-P-T	
XU010	A177012	001.00 EA	SOCKET 84 POS PLCC PC MT	PLCC-84-P-T	
XU012	A177012	001.00 EA	SOCKET 84 POS PLCC PC MT	PLCC-84-P-T	
XU020	A086897	001.00 EA	SOCKET 20 PIN DIP PC MT	RBN ICT-203-S-TG	
XU021	A086897	001.00 EA	SOCKET 20 PIN DIP PC MT	RBN ICT-203-S-TG	
XU023	A177012	001.00 EA	SOCKET 84 POS PLCC PC MT	PLCC-84-P-T	
XU024	A177012	001.00 EA	SOCKET 84 POS PLCC PC MT	PLCC-84-P-T	
XU025	A177012	001.00 EA	SOCKET 84 POS PLCC PC MT	PLCC-84-P-T	
XU029	A086897	001.00 EA	SOCKET 20 PIN DIP PC MT	RBN ICT-203-S-TG	
XU030	A086897	001.00 EA	SOCKET 20 PIN DIP PC MT	RBN ICT-203-S-TG	
XU031	A086897	001.00 EA	SOCKET 20 PIN DIP PC MT	RBN ICT-203-S-TG	
XU032	A086897	001.00 EA	SOCKET 20 PIN DIP PC MT	RBN ICT-203-S-TG	
XU035	A086897	001.00 EA	SOCKET 20 PIN DIP PC MT	RBN ICT-203-S-TG	
XU037	A173737	001.00 EA	SOCKET 24 PIN DIP PC MT LOW PROFILE OPEN UL94V	610-24-CC-D	
XU038	A173737	001.00 EA	SOCKET 24 PIN DIP PC MT LOW PROFILE OPEN UL94V	610-24-CC-D	
XU039	A173737	001.00 EA	SOCKET 24 PIN DIP PC MT LOW PROFILE OPEN UL94V	610-24-CC-D	
XU040	A173737	001.00 EA	SOCKET 24 PIN DIP PC MT LOW PROFILE OPEN UL94V	610-24-CC-D	
XU041	A173737	001.00 EA	SOCKET 24 PIN DIP PC MT LOW PROFILE OPEN UL94V	610-24-CC-D	
XU042	A173737	001.00 EA	SOCKET 24 PIN DIP PC MT LOW PROFILE OPEN UL94V	610-24-CC-D	
XU043	A086897	001.00 EA	SOCKET 20 PIN DIP PC MT	RBN ICT-203-S-TG	
XU044	A173737	001.00 EA	SOCKET 24 PIN DIP PC MT LOW PROFILE OPEN UL94V	610-24-CC-D	

A307218 SUB-ASSY PWB CPU DTA A307218

Revision C
Effective: July 10, 1990

REF	SA PART	Qty	Description	Mfr Part	CAGE
XU046	A173737	001.00 EA	SOCKET 24 PIN DIP PC MT LOW PROFILE OPEN UL94V	610-24-CC-D	
XU047	A173737	001.00 EA	SOCKET 24 PIN DIP PC MT LOW PROFILE OPEN UL94V	610-24-CC-D	
XU048	A173737	001.00 EA	SOCKET 24 PIN DIP PC MT LOW PROFILE OPEN UL94V	610-24-CC-D	
XU049	A173737	001.00 EA	SOCKET 24 PIN DIP PC MT LOW PROFILE OPEN UL94V	610-24-CC-D	
XU050	A173737	001.00 EA	SOCKET 24 PIN DIP PC MT LOW PROFILE OPEN UL94V	610-24-CC-D	
XU051	A086897	001.00 EA	SOCKET 20 PIN DIP PC MT	RBN ICT-203-S-TG	
XU053	A086897	001.00 EA	SOCKET 20 PIN DIP PC MT	RBN ICT-203-S-TG	
XU054	A173737	001.00 EA	SOCKET 24 PIN DIP PC MT LOW PROFILE OPEN UL94V	610-24-CC-D	
XU055	A173737	001.00 EA	SOCKET 24 PIN DIP PC MT LOW PROFILE OPEN UL94V	610-24-CC-D	
XU056	A086897	001.00 EA	SOCKET 20 PIN DIP PC MT	RBN ICT-203-S-TG	
XU058	A086897	001.00 EA	SOCKET 20 PIN DIP PC MT	RBN ICT-203-S-TG	
Y001	A176976	001.00 EA	CRYSTAL 20MHZ.015% SE RES HC18	MP-200	
001	A306230	001.00 EA	PWB CPU DTA	PER SA DWG. 306230 O	
001	A457008	001.00 EA	PWB CPU DTA	PER SA DWG. 457008 A	
002	A082463	002.00 EA	EXTRACTOR PC BOARD	THC 5005-08N	
004	A083638	000.10 RL	TAPE PLYURTHN FOAM DBL FCE 1/16 T 1/2 W	MMM 4016	

A307223 SUB-ASSY PWB DS3-DS1/DSO DEMUX A307223

Revision K
Effective: January 08, 1992

REF	SA PART	Qty	Description	Mfr Part	CAGE
	A447745	000.00 EA	DEMUX BOARD LEVEL TEST PROCEDR		
BB001	A177102	001.00 EA	BUS DISTRBTN 2-LYR VERT MT 36-PIN IN-LINE	RAZ QV-2 17.6.3 (.1)	
BB002	A177102	001.00 EA	BUS DISTRBTN 2-LYR VERT MT 36-PIN IN-LINE	RAZ QV-2 17.6.3 (.1)	
CR001	A071122	001.00 EA	DIODE 1N914 SIL 75V 75MA	1N914	
CR002	A071122	001.00 EA	DIODE 1N914 SIL 75V 75MA	1N914	
CR003	A071122	001.00 EA	DIODE 1N914 SIL 75V 75MA	1N914	
CR004	A071122	001.00 EA	DIODE 1N914 SIL 75V 75MA	1N914	
CR005	A071122	001.00 EA	DIODE 1N914 SIL 75V 75MA	1N914	
C001	A080139	001.00 EA	CAPACITR .1 MF 50V CER MONO -20%/+80%	RPE122Z5U104Z050V	
C002	A080139	001.00 EA	CAPACITR .1 MF 50V CER MONO -20%/+80%	RPE122Z5U104Z050V	
C003	A176497	001.00 EA	CAP .01MF 50V CER MON 10% .2LS	RPE122X7R103K50V	
C004	A080139	001.00 EA	CAPACITR .1 MF 50V CER MONO -20%/+80%	RPE122Z5U104Z050V	
C005	A080139	001.00 EA	CAPACITR .1 MF 50V CER MONO -20%/+80%	RPE122Z5U104Z050V	
C006	A081210	001.00 EA	CAPACITR .01 MF 50V CER MONO X7R 10%	RPE121X7R103K50V	
C007	A080139	001.00 EA	CAPACITR .1 MF 50V CER MONO -20%/+80%	RPE122Z5U104Z050V	
C008	A070470	001.00 EA	CAPACITR 10 PF 500V SILVER MICA 5%	CD15CD100J03	
C009	A174000	000.00 EA	NOT USED ON THIS ASSEMBLY		
C010	A035656	001.00 EA	CAPACITR 100 MF 20V 10% SOLID TANT POL	T354M107K020AS	
C011	A077965	001.00 EA	CAPACITR 51 PF 500V SILVER MICA 2%	CD6ED510G03	
C012	A080139	001.00 EA	CAPACITR .1 MF 50V CER MONO -20%/+80%	RPE122Z5U104Z050V	
C013	A080139	001.00 EA	CAPACITR .1 MF 50V CER MONO -20%/+80%	RPE122Z5U104Z050V	
C014	A080139	001.00 EA	CAPACITR .1 MF 50V CER MONO -20%/+80%	RPE122Z5U104Z050V	
C015	A080139	001.00 EA	CAPACITR .1 MF 50V CER MONO -20%/+80%	RPE122Z5U104Z050V	
C016	A080139	001.00 EA	CAPACITR .1 MF 50V CER MONO -20%/+80%	RPE122Z5U104Z050V	
C017	A077965	001.00 EA	CAPACITR 51 PF 500V SILVER MICA 2%	CD6ED510G03	
C018	A035656	001.00 EA	CAPACITR 100 MF 20V 10% SOLID TANT POL	T354M107K020AS	
C019	A070474	001.00 EA	CAPACITR 10 PF 1 KV CER DISC S2L 10%	DD100	
C020	A070474	001.00 EA	CAPACITR 10 PF 1 KV CER DISC S2L 10%	DD100	
C021	A080139	001.00 EA	CAPACITR .1 MF 50V CER MONO -20%/+80%	RPE122Z5U104Z050V	
C022	A080139	001.00 EA	CAPACITR .1 MF 50V CER MONO -20%/+80%	RPE122Z5U104Z050V	
C023	A080139	001.00 EA	CAPACITR .1 MF 50V CER MONO -20%/+80%	RPE122Z5U104Z050V	
C024	A080139	001.00 EA	CAPACITR .1 MF 50V CER MONO -20%/+80%	RPE122Z5U104Z050V	
C025	A077965	001.00 EA	CAPACITR 51 PF 500V SILVER MICA 2%	CD6ED510G03	
C026	A080139	001.00 EA	CAPACITR .1 MF 50V CER MONO -20%/+80%	RPE122Z5U104Z050V	
C027	A035656	001.00 EA	CAPACITR 100 MF 20V 10% SOLID TANT POL	T354M107K020AS	
C028	A080139	001.00 EA	CAPACITR .1 MF 50V CER MONO -20%/+80%	RPE122Z5U104Z050V	
C029	A080139	001.00 EA	CAPACITR .1 MF 50V CER MONO -20%/+80%	RPE122Z5U104Z050V	
C030	A080139	001.00 EA	CAPACITR .1 MF 50V CER MONO -20%/+80%	RPE122Z5U104Z050V	
C031	A081095	001.00 EA	CAPACITR 3.3 MF 50V CER MONO 20%	3C37Z5U335M050B	
C032	A080139	001.00 EA	CAPACITR .1 MF 50V CER MONO -20%/+80%	RPE122Z5U104Z050V	
C033	A081095	001.00 EA	CAPACITR 3.3 MF 50V CER MONO 20%	3C37Z5U335M050B	
C034	A081095	001.00 EA	CAPACITR 3.3 MF 50V CER MONO 20%	3C37Z5U335M050B	
C035	A172707	001.00 EA	CAPACITR .068 MF 10% 50V CER MONO	RPE122X7R683K50V	
C036	A070470	001.00 EA	CAPACITR 10 PF 500V SILVER MICA 5%	CD15CD100J03	
C037	A078600	000.00 FT	NOT ASSIGNED	FOR ENG ONLY	
C038	A035656	001.00 EA	CAPACITR 100 MF 20V 10% SOLID TANT POL	T354M107K020AS	
C039	A080139	001.00 EA	CAPACITR .1 MF 50V CER MONO -20%/+80%	RPE122Z5U104Z050V	
C040	A080139	001.00 EA	CAPACITR .1 MF 50V CER MONO -20%/+80%	RPE122Z5U104Z050V	
C041	A080139	001.00 EA	CAPACITR .1 MF 50V CER MONO -20%/+80%	RPE122Z5U104Z050V	
C042	A080139	001.00 EA	CAPACITR .1 MF 50V CER MONO -20%/+80%	RPE122Z5U104Z050V	
C043	A080139	001.00 EA	CAPACITR .1 MF 50V CER MONO -20%/+80%	RPE122Z5U104Z050V	
C044	A081808	001.00 EA	CAPACITR 2.2 MF 50V CER MONO 20%	RPE114Z5U225M50V	
C045	A080139	001.00 EA	CAPACITR .1 MF 50V CER MONO -20%/+80%	RPE122Z5U104Z050V	
C046	A035656	001.00 EA	CAPACITR 100 MF 20V 10% SOLID TANT POL	T354M107K020AS	
C047	A081995	001.00 EA	CAPACITR .001 MF 100V CER MONO X7R 10% .1LS	RPE121X7R102K100V	

A307223 SUB-ASSY PWB DS3-DS1/DSO DEMUX A307223

Revision K
Effective: January 08, 1992

REF	SA PART	Qty	Description	Mfr Part	CAGE
C048	A176497	001.00 EA	CAP .01MF 50V CER MON 10% .2LS	RPE122X7R103K50V	
C049	A035656	001.00 EA	CAPACITR 100 MF 20V 10% SOLID TANT POL	T354M107K020AS	
C050	A080139	001.00 EA	CAPACITR .1 MF 50V CER MONO -20%/+80%	RPE122Z5U104Z050V	
C051	A080139	001.00 EA	CAPACITR .1 MF 50V CER MONO -20%/+80%	RPE122Z5U104Z050V	
C052	A035656	001.00 EA	CAPACITR 100 MF 20V 10% SOLID TANT POL	T354M107K020AS	
C053	A081101	001.00 EA	CAPACITR 1 MF 50V CER MONO 20%	RPE113Z5U105M50V	
C054	A070498	001.00 EA	CAPACITR 47 PF 500V SILVER MICA 5%	CD15ED470J03	
C055	A070498	001.00 EA	CAPACITR 47 PF 500V SILVER MICA 5%	CD15ED470J03	
C056	A080139	001.00 EA	CAPACITR .1 MF 50V CER MONO -20%/+80%	RPE122Z5U104Z050V	
C057	A035656	001.00 EA	CAPACITR 100 MF 20V 10% SOLID TANT POL	T354M107K020AS	
C058	A080139	001.00 EA	CAPACITR .1 MF 50V CER MONO -20%/+80%	RPE122Z5U104Z050V	
C059	A077713	001.00 EA	CAPACITR .005 MF 50V CER DISC Z5V-20+80%	CK-502	
C060	A084221	001.00 EA	CAPACITR .022 MF 100V CER MONO X7R 10%	RPE122X7R223K100V	
C061	A078600	000.00 FT	NOT ASSIGNED	FOR ENG ONLY	
C062	A083258	001.00 EA	CAPACITR CHIP .1 MF 50V	C1812C104M5XAH	
C063	A083258	001.00 EA	CAPACITR CHIP .1 MF 50V	C1812C104M5XAH	
C064	A083258	001.00 EA	CAPACITR CHIP .1 MF 50V	C1812C104M5XAH	
C065	A083258	001.00 EA	CAPACITR CHIP .1 MF 50V	C1812C104M5XAH	
C066	A083258	001.00 EA	CAPACITR CHIP .1 MF 50V	C1812C104M5XAH	
C067	A083258	001.00 EA	CAPACITR CHIP .1 MF 50V	C1812C104M5XAH	
C068	A083258	001.00 EA	CAPACITR CHIP .1 MF 50V	C1812C104M5XAH	
C069	A173733	001.00 EA	CAPACITR IC BYPASS FOR .3W 24L-DIP .03MF	303Z2A	
C070	A173733	001.00 EA	CAPACITR IC BYPASS FOR .3W 24L-DIP .03MF	303Z2A	
C071	A083258	001.00 EA	CAPACITR CHIP .1 MF 50V	C1812C104M5XAH	
C072	A080139	001.00 EA	CAPACITR .1 MF 50V CER MONO -20%/+80%	RPE122Z5U104Z050V	
C073	A080139	001.00 EA	CAPACITR .1 MF 50V CER MONO -20%/+80%	RPE122Z5U104Z050V	
C074	A084223	001.00 EA	CAPACITR .047 MF 100V CER MONO X7R 10%	RPE122X7R473K100V	
DS001	A177211	001.00 EA	LAMP LED-RSTR RED PC MT 5V 3MA	555-2007	
DS002	A177211	001.00 EA	LAMP LED-RSTR RED PC MT 5V 3MA	555-2007	
DS003	A177211	001.00 EA	LAMP LED-RSTR RED PC MT 5V 3MA	555-2007	
DS004	A177211	001.00 EA	LAMP LED-RSTR RED PC MT 5V 3MA	555-2007	
DS005	A177211	001.00 EA	LAMP LED-RSTR RED PC MT 5V 3MA	555-2007	
J001	A173712	001.00 EA	CONN RECT 96-COND MALE PNL MT RT ANG PC MT	532505-1	00779
J002	A173712	001.00 EA	CONN RECT 96-COND MALE PNL MT RT ANG PC MT	532505-1	00779
J003	A078600	000.00 FT	NOT ASSIGNED	FOR ENG ONLY	
J004	A078600	000.00 FT	NOT ASSIGNED	FOR ENG ONLY	
J005	A078600	000.00 FT	NOT ASSIGNED	FOR ENG ONLY	
J006	A078600	000.00 FT	NOT ASSIGNED	FOR ENG ONLY	
J007	A078600	000.00 FT	NOT ASSIGNED	FOR ENG ONLY	
J008	A078600	000.00 FT	NOT ASSIGNED	FOR ENG ONLY	
J009	A078600	000.00 FT	NOT ASSIGNED	FOR ENG ONLY	
J010	A078600	000.00 FT	NOT ASSIGNED	FOR ENG ONLY	
J011	A078600	000.00 FT	NOT ASSIGNED	FOR ENG ONLY	
J012	A078600	000.00 FT	NOT ASSIGNED	FOR ENG ONLY	
J013	A078600	000.00 FT	NOT ASSIGNED	FOR ENG ONLY	
J014	A078600	000.00 FT	NOT ASSIGNED	FOR ENG ONLY	
J015	A078600	000.00 FT	NOT ASSIGNED	FOR ENG ONLY	
J016	A178481	001.00 EA	CONN HEADER DBL ROW RT ANG 1-PIN PC MT	TSW-101-09-G-D-RA	
J017	A087366	001.00 EA	CONN HDR SGL ROW STR 3-PIN PC MT OPEN .318 HT	87220-3	00779
J018	A087366	001.00 EA	CONN HDR SGL ROW STR 3-PIN PC MT OPEN .318 HT	87220-3	00779
J019	A178480	001.00 EA	CONN HEADER SGL ROW RT ANG 2-PIN PC MT	TSW-102-11-G-S-RA	
J020	A087229	001.00 EA	CONN HEADER SGL ROW STRAIGHT 2-PIN PC MT	87220-2	00779
J021	A087229	001.00 EA	CONN HEADER SGL ROW STRAIGHT 2-PIN PC MT	87220-2	00779
K001	A177023	001.00 EA	RELAY 5VDC DPDT DIP SEALED	DF2E-DC5V	

A307223 SUB-ASSY PWB DS3-DS1/DSO DEMUX A307223

Revision K
Effective: January 08, 1992

REF	SA PART	Qty	Description	Mfr Part	CAGE
L001	A077954	001.00 EA	INDUCTOR .47 UH SUBMIN UNSHLD 10%	IR-2 .47UH	
L002	A078716	001.00 EA	INDUCTOR 100 UH SUBMIN UNSHLD 10%	IR-2 100UH	
L003	A174000	000.00 EA	NOT USED ON THIS ASSEMBLY		
L004	A078716	001.00 EA	INDUCTOR 100 UH SUBMIN UNSHLD 10%	IR-2 100UH	
L005	A082591	001.00 EA	INDUCTOR .39 UH SUBMIN UNSHLD 10%	IR-2 .39UH	
L006	A078716	001.00 EA	INDUCTOR 100 UH SUBMIN UNSHLD 10%	IR-2 100UH	
L007	A078716	001.00 EA	INDUCTOR 100 UH SUBMIN UNSHLD 10%	IR-2 100UH	
L008	A078716	001.00 EA	INDUCTOR 100 UH SUBMIN UNSHLD 10%	IR-2 100UH	
P017	A086884	001.00 EA	JUMPER FEMALE INSULATED .10 SPACING	65474-004	
P018	A086884	001.00 EA	JUMPER FEMALE INSULATED .10 SPACING	65474-004	
Q001	A174224	001.00 EA	TRANSSTR MRF-571 NPN SIL	MRF-571	
Q002	A083032	001.00 EA	TRANSSTR 2N2222A NPN SIL	FSC 2N2222A	
Q003	A079660	001.00 EA	TRANSSTR 2N4093 FET N-CHNL JUNC	2N4093	
Q004	A079660	001.00 EA	TRANSSTR 2N4093 FET N-CHNL JUNC	2N4093	
Q005	A083032	001.00 EA	TRANSSTR 2N2222A NPN SIL	FSC 2N2222A	
Q006	A077148	001.00 EA	TRANSSTR 2N3251 PNP SIL	2N3251	
Q007	A083032	001.00 EA	TRANSSTR 2N2222A NPN SIL	FSC 2N2222A	
R001	A074722	001.00 EA	RESISTOR 4.7K OHM 1/4W 5% COMP	RCR07G472JS	
R002	A074722	001.00 EA	RESISTOR 4.7K OHM 1/4W 5% COMP	RCR07G472JS	
R003	A074722	001.00 EA	RESISTOR 4.7K OHM 1/4W 5% COMP	RCR07G472JS	
R004	A074722	001.00 EA	RESISTOR 4.7K OHM 1/4W 5% COMP	RCR07G472JS	
R005	A074722	001.00 EA	RESISTOR 4.7K OHM 1/4W 5% COMP	RCR07G472JS	
R006	A074722	001.00 EA	RESISTOR 4.7K OHM 1/4W 5% COMP	RCR07G472JS	
R007	A074722	001.00 EA	RESISTOR 4.7K OHM 1/4W 5% COMP	RCR07G472JS	
R008	A074722	001.00 EA	RESISTOR 4.7K OHM 1/4W 5% COMP	RCR07G472JS	
R009	A083930	001.00 EA	RESISTOR 31.6K OHM RN55C 1% MTL FLM	XZ RN55C 3162F	
R010	A074698	001.00 EA	RESISTOR 560 OHM 1/4W 5% COMP	RCR07G561JS	
R011	A074698	001.00 EA	RESISTOR 560 OHM 1/4W 5% COMP	RCR07G561JS	
R012	A074722	001.00 EA	RESISTOR 4.7K OHM 1/4W 5% COMP	RCR07G472JS	
R013	A074714	001.00 EA	RESISTOR 3.3K OHM 1/4W 5% COMP	CR07G332JS	
R014	A074702	001.00 EA	RESISTOR 1.0K OHM 1/4W 5% COMP	RCR07G102JS	
R015	A074722	001.00 EA	RESISTOR 4.7K OHM 1/4W 5% COMP	RCR07G472JS	
R016	A075687	001.00 EA	RESISTOR 47K OHM 1/4W 5% COMP	AB-RCR07G473JS	
R017	A074714	001.00 EA	RESISTOR 3.3K OHM 1/4W 5% COMP	CR07G332JS	
R018	A074702	001.00 EA	RESISTOR 1.0K OHM 1/4W 5% COMP	RCR07G102JS	
R019	A081992	001.00 EA	RESISTOR 22 OHM 1/4W 5% COMP	RCR-07G220-JS	
R020	A174428	001.00 EA	RESISTOR 19.1K OHM RN55C 1%	XZ RN55C1912F	
R021	A078700	001.00 EA	FACTORY SELECTED VALUE	PER DISCP.	
R022	A083913	001.00 EA	RESISTOR 7.87K OHM RN55C 1% MTL FLM	DP RN55C7871F	
R023	A083936	001.00 EA	RESISTOR 48.7K OHM RN55C 1% MTL FLM	XZ RN55C4872F	
R024	A074702	001.00 EA	RESISTOR 1.0K OHM 1/4W 5% COMP	RCR07G102JS	
R025	A174417	001.00 EA	RESISTOR 8.45K OHM RN55C 1%	DP RN55C8451F	
R026	A078600	000.00 FT	NOT ASSIGNED	FOR ENG ONLY	
R027	A083903	001.00 EA	RESISTOR 3.32K OHM RN55C 1% MTL FLM	DP RN55C3321F	
R028	A078929	001.00 EA	RESISTOR 1.00K OHM RN55C 1% MTL FLM	XZ RN55C1001F	
R029	A087838	001.00 EA	POT 2K OHM 1/2W CER 3/8 SQ VERT ADJ 25T	3299W-1-202	BOUR
R030	A074710	001.00 EA	RESISTOR 2.2K OHM 1/4W 5% COMP	RCR07G222JS	
R031	A178264	001.00 EA	RESISTOR 9.09K OHM 1/4W 1% 100PPM MTL FLM	5043ED9K090F	
R032	A079712	001.00 EA	RESISTOR 36.5K OHM RN55C 1% MTL FLM	DP RN55C3652F	
R033	A178308	001.00 EA	RESISTOR 22.1K OHM 1/4W 1% 100PPM MTL FLM	5043ED22K10F	
R034	A082678	001.00 EA	RESISTOR 4.7 OHM 1/4W 5% COMP	RCR07G4R7JS	
R035	A085745	001.00 EA	RESISTOR 68.1 OHM RN55C 1% MTL FLM	RN55C68R1F	
R036	A075551	001.00 EA	RESISTOR 10 OHM 1/4W 5% COMP	RCR07G100JS	
R037	A089522	001.00 EA	POT 100K OHM 1/2W CER 3/8 SQ VER ADJ 25T	3299W-1-104	

A307223 SUB-ASSY PWB DS3-DS1/DSO DEMUX A307223

Revision K
Effective: January 08, 1992

REF	SA PART	Qty	Description	Mfr Part	CAGE
R038	A074710	001.00 EA	RESISTOR 2.2K OHM 1/4W 5% COMP	RCR07G222JS	
R039	A074735	001.00 EA	RESISTOR 22K OHM 1/4W 5% COMP	RCR07G223JS	
R040	A081992	001.00 EA	RESISTOR 22 OHM 1/4W 5% COMP	RCR-07G220-JS	
R041	A083842	001.00 EA	RESISTOR 33.2 OHM RN55D 1% MTL FLM	DP RN55D33R2F	
R042	A083855	001.00 EA	RESISTOR 105 OHM RN55C 1% MTL FLM	RN55C1050F	
R043	A178313	001.00 EA	RESISTOR 12.1 OHM 1/4W 1% 100PPM MTL FLM	5043ED12R10F	
R044	A083854	001.00 EA	RESISTOR 86.6 OHM RN55C 1% MTL FLM	XZ RN55C86R6F	
R045	A083089	001.00 EA	RESISTOR 75.0 OHM RN55C 1% MTL FLM	XZ RN55C75R0F T&R	
R046	A083835	001.00 EA	RESISTOR 23.7 OHM RN55D 1% MTL FLM	XZ RN55D 23R7F	
R047	A083089	001.00 EA	RESISTOR 75.0 OHM RN55C 1% MTL FLM	XZ RN55C75R0F T&R	
R048	A078915	001.00 EA	RESISTOR 221 OHM RN55C 1% MTL FLM	DP CMF55-70-2210FC/	
R049	A083089	001.00 EA	RESISTOR 75.0 OHM RN55C 1% MTL FLM	XZ RN55C75R0F T&R	
R050	A083089	001.00 EA	RESISTOR 75.0 OHM RN55C 1% MTL FLM	XZ RN55C75R0F T&R	
R051	A074722	001.00 EA	RESISTOR 4.7K OHM 1/4W 5% COMP	RCR07G472JS	
R052	A074722	001.00 EA	RESISTOR 4.7K OHM 1/4W 5% COMP	RCR07G472JS	
R053	A074722	001.00 EA	RESISTOR 4.7K OHM 1/4W 5% COMP	RCR07G472JS	
R054	A074722	001.00 EA	RESISTOR 4.7K OHM 1/4W 5% COMP	RCR07G472JS	
R055	A074722	001.00 EA	RESISTOR 4.7K OHM 1/4W 5% COMP	RCR07G472JS	
R056	A074722	001.00 EA	RESISTOR 4.7K OHM 1/4W 5% COMP	RCR07G472JS	
R057	A074722	001.00 EA	RESISTOR 4.7K OHM 1/4W 5% COMP	RCR07G472JS	
R058	A074722	001.00 EA	RESISTOR 4.7K OHM 1/4W 5% COMP	RCR07G472JS	
R059	A074722	001.00 EA	RESISTOR 4.7K OHM 1/4W 5% COMP	RCR07G472JS	
R060	A074735	001.00 EA	RESISTOR 22K OHM 1/4W 5% COMP	RCR07G223JS	
R061	A074710	001.00 EA	RESISTOR 2.2K OHM 1/4W 5% COMP	RCR07G222JS	
R062	A074710	001.00 EA	RESISTOR 2.2K OHM 1/4W 5% COMP	RCR07G222JS	
R063	A074710	001.00 EA	RESISTOR 2.2K OHM 1/4W 5% COMP	RCR07G222JS	
R064	A074710	001.00 EA	RESISTOR 2.2K OHM 1/4W 5% COMP	RCR07G222JS	
R065	A074714	001.00 EA	RESISTOR 3.3K OHM 1/4W 5% COMP	CR07G332JS	
R066	A074702	001.00 EA	RESISTOR 1.0K OHM 1/4W 5% COMP	RCR07G102JS	
R067	A074702	001.00 EA	RESISTOR 1.0K OHM 1/4W 5% COMP	RCR07G102JS	
R068	A074714	001.00 EA	RESISTOR 3.3K OHM 1/4W 5% COMP	CR07G332JS	
R069	A084612	001.00 EA	RESISTOR 4.75K OHM RN55C 1% MTL FLM	XZ RN55C4751F	
R070	A075687	001.00 EA	RESISTOR 47K OHM 1/4W 5% COMP	AB-RCR07G473JS	
R071	A079985	001.00 EA	RESISTOR 40.2K OHM RN55C 1% MTL FLM	DP RN55C4022F	
R072	A074722	001.00 EA	RESISTOR 4.7K OHM 1/4W 5% COMP	RCR07G472JS	
R073	A083931	001.00 EA	RESISTOR 33.2K OHM RN55C 1% MTL FLM	XZ RN55C3322F	
R073	A178313	001.00 EA	RESISTOR 12.1 OHM 1/4W 1% 100PPM MTL FLM	5043ED12R10F	
R074	A084612	001.00 EA	RESISTOR 4.75K OHM RN55C 1% MTL FLM	XZ RN55C4751F	
R075	A174949	001.00 EA	RESISTOR 10.0K OHM 1/4W 1% MTL FLM	CCF-551002F	
R076	A087841	001.00 EA	POT 20K OHM 1/2W CER 3/8 SQ VERT ADJ 25T	3299W-1-203	
R077	A087838	001.00 EA	POT 2K OHM 1/2W CER 3/8 SQ VERT ADJ 25T	3299W-1-202	BOUR
R078	A081992	001.00 EA	RESISTOR 22 OHM 1/4W 5% COMP	RCR-07G220-JS	
R079	A078929	001.00 EA	RESISTOR 1.00K OHM RN55C 1% MTL FLM	XZ RN55C1001F	
R080	A078600	000.00 FT	NOT ASSIGNED	FOR ENG ONLY	
R081	A178248	001.00 EA	RESISTOR 2.00K OHM 1/4W 1% 100PPM MTL FLM	5043ED2K000F	
R082	A078600	000.00 FT	NOT ASSIGNED	FOR ENG ONLY	
R084	A074714	001.00 EA	RESISTOR 3.3K OHM 1/4W 5% COMP	CR07G332JS	
R085	A079712	001.00 EA	RESISTOR 36.5K OHM RN55C 1% MTL FLM	DP RN55C3652F	
R086	A083918	001.00 EA	RESISTOR 12.7K OHM RN55C 1% MTL FLM	DP RN55C1272F	
R087	A074710	001.00 EA	RESISTOR 2.2K OHM 1/4W 5% COMP	RCR07G222JS	
R088	A074735	001.00 EA	RESISTOR 22K OHM 1/4W 5% COMP	RCR07G223JS	
R089	A074710	001.00 EA	RESISTOR 2.2K OHM 1/4W 5% COMP	RCR07G222JS	
R090	A078600	000.00 FT	NOT ASSIGNED	FOR ENG ONLY	
R091	A081992	001.00 EA	RESISTOR 22 OHM 1/4W 5% COMP	RCR-07G220-JS	

A307223 SUB-ASSY PWB DS3-DS1/DSO DEMUX A307223

Revision K
Effective: January 08, 1992

REF	SA PART	Qty	Description	Mfr Part	CAGE
R092	A081992	001.00 EA	RESISTOR 22 OHM 1/4W 5% COMP	RCR-07G220-JS	
R093	A083797	001.00 EA	RESISTOR 71.5 OHM RN55C 1% MTL FLM	DP CMF55-70-71R5FC/	
R094	A083085	001.00 EA	RESISTOR 45.3 OHM RN55C 1% MTL FLM	DP RN55C45R3F	
R095	A083797	001.00 EA	RESISTOR 71.5 OHM RN55C 1% MTL FLM	DP CMF55-70-71R5FC/	
R096	A078929	001.00 EA	RESISTOR 1.00K OHM RN55C 1% MTL FLM	XZ RN55C1001F	
R097	A083038	001.00 EA	RESISTOR 6.81K OHM RN55C 1% MTL FLM	XZ RN55C6811F	
R098	A078929	001.00 EA	RESISTOR 1.00K OHM RN55C 1% MTL FLM	XZ RN55C1001F	
R099	A079863	001.00 EA	RESISTOR 1.21K OHM RN55C 1% MTL FLM	DP RN55C1211F	
R100	A079863	001.00 EA	RESISTOR 1.21K OHM RN55C 1% MTL FLM	DP RN55C1211F	
R101	A074706	001.00 EA	RESISTOR 1.5K OHM 1/4W 5% COMP	RCR07G152JS	
R102	A077672	001.00 EA	RESISTOR 33K OHM 1/4W 5% COMP	RCR07G333JS	
R103	A077592	001.00 EA	RESISTOR 120 OHM 1/4W 5% COMP	RCR07G121JS	
R104	A083911	001.00 EA	RESISTOR 5.62K OHM RN55C 1% MTL FLM 50PPM	RN55C5621F	
R105	A074703	001.00 EA	RESISTOR 1.2K OHM 1/4W 5% COMP	RCR07G122JS	
R106	A078929	001.00 EA	RESISTOR 1.00K OHM RN55C 1% MTL FLM	XZ RN55C1001F	
R107	A078929	001.00 EA	RESISTOR 1.00K OHM RN55C 1% MTL FLM	XZ RN55C1001F	
R108	A083097	001.00 EA	RESISTOR 332 OHM RN55C 1% MTL FLM	XZ RN55C3320F	
R109	A078929	001.00 EA	RESISTOR 1.00K OHM RN55C 1% MTL FLM	XZ RN55C1001F	
R110	A084612	001.00 EA	RESISTOR 4.75K OHM RN55C 1% MTL FLM	XZ RN55C4751F	
R111	A078930	001.00 EA	RESISTOR 2.21K OHM RN55C 1% MTL FLM	DP RN55C2211F	
R112	A074722	001.00 EA	RESISTOR 4.7K OHM 1/4W 5% COMP	RCR07G472JS	
R113	A074723	001.00 EA	RESISTOR 5.6K OHM 1/4W 5% COMP	CR07G562JS	
R114	A079128	001.00 EA	RESISTOR 768 OHM RN55C 1% MTL FLM	DP RN55C7680F	
R115	A079128	001.00 EA	RESISTOR 768 OHM RN55C 1% MTL FLM	DP RN55C7680F	
R116	A084612	001.00 EA	RESISTOR 4.75K OHM RN55C 1% MTL FLM	XZ RN55C4751F	
R117	A178248	000.00 EA	RESISTOR 2.00K OHM 1/4W 1% 100PPM MTL FLM	5043ED2K000F	
R117	A178249	000.00 EA	RESISTOR 2.21K OHM 1/4W 1% 100PPM MTL FLM	5043ED2K210F	
R117	A178250	000.00 EA	RESISTOR 2.49K OHM 1/4W 1% 100PPM MTL FLM	5043ED2K490F	
R117	A178251	000.00 EA	RESISTOR 3.01K OHM 1/4W 1% 100PPM MTL FLM	5043ED3K010F	
R117	A178252	000.00 EA	RESISTOR 3.32K OHM 1/4W 1% 100PPM MTL FLM	5043ED3K320F	
R117	A174956	000.00 EA	RES 2.87K OHM 1/4W 1% MTL FLM	DP CCF-552871F	
R117	A080380	001.00 EA	RESISTOR 2.74K OHM RN55C 1% MTL FLM	DP RN55C2741F	
R118	A071917	001.00 EA	RESISTOR 330 OHM 1/4W 5% COMP	RCR07G331JS	
R119	A071917	001.00 EA	RESISTOR 330 OHM 1/4W 5% COMP	RCR07G331JS	
R120	A178271	001.00 EA	RESISTOR 100K OHM 1/4W 1% 100PPM MTL FLM	5043ED100K0F	
R121	A178279	001.00 EA	RESISTOR 1.0M OHM 1/4W 1% 100PPM MTL FLM	5043ED1M000F	
R122	A178215	001.00 EA	RESISTOR 100 OHM 1/4W 1% 100PPM MTL FLM	5043ED100R0F	
R123	A178215	001.00 EA	RESISTOR 100 OHM 1/4W 1% 100PPM MTL FLM	5043ED100R0F	
TP001	A317165	000.00 EA	TEST POINT .200 CENTER	PER DWG. 317165	
TP002	A317165	001.00 EA	TEST POINT .200 CENTER	PER DWG. 317165	
TP003	A317165	001.00 EA	TEST POINT .200 CENTER	PER DWG. 317165	
TP004	A317165	001.00 EA	TEST POINT .200 CENTER	PER DWG. 317165	
T001	A177027	001.00 EA	XFMR 1;1.37CT PRI L 680UH	2745C	
T002	A177027	001.00 EA	XFMR 1;1.37CT PRI L 680UH	2745C	
T003	A309104	001.00 EA	TRANSFORMER MINATURE AUDIO	PM34M	
T004	A078600	000.00 FT	NOT ASSIGNED	FOR ENG ONLY	
U001	A084000	000.00 EA	VARIES WITH MODEL,SEE HIGHER ASSY FOR PN	PER S A DWG	
U002	A327877	001.00 EA	IC FRAMER	LSI ASIC #LIA 3324-M	
U003	A327878	001.00 EA	IC PATTERN GENERATOR	LSI ASIC #LIA3381-MC	
U004	A327877	001.00 EA	IC FRAMER	LSI ASIC #LIA 3324-M	
U005	A327876	001.00 EA	IC CLOCK REC DIGITAL	LSI LIA3382-MC	
U006	A170206	001.00 EA	IC ECL TRANSLATOR TTL TO ECL QUAD	MC10124L	
U007	A177934	001.00 EA	IC CMOS GATE AND 2-IN QUAD	FSC 74ACT08PC	
U008	A172179	001.00 EA	IC COMPARATOR - VOLTAGE 8L - DIP DUAL	LM393N	

A307223 SUB-ASSY PWB DS3-DS1/DSO DEMUX A307223

Revision K
Effective: January 08, 1992

REF	SA PART	Qty	Description	Mfr Part	CAGE
U009	A327875	001.00 EA	IC DS1/1C/2/3 ANALOG CLOCK REC	NSC ACK REC	
U010	A084000	000.00 EA	VARIES WITH MODEL,SEE HIGHER ASSY FOR PN	PER S A DWG	
U011	A177252	001.00 EA	IC CMOS CNTR 8-BIT BINARY	TI SN74HC590AN	
U012	A177252	001.00 EA	IC CMOS CNTR 8-BIT BINARY	TI SN74HC590AN	
U013	A177252	001.00 EA	IC CMOS CNTR 8-BIT BINARY	TI SN74HC590AN	
U014	A176276	001.00 EA	IC MEM CMOS FIFO 64X4 ASYNC	CYP CY7C 403-25PC	
U015	A173221	001.00 EA	IC CMOS GATE NAND 2-IN QUAD	NSC MM74HC00N	
U016	A174227	001.00 EA	IC CMOS LATCH 8-BIT ADDRESSABLE	CD74HC259E	
U017	A327878	001.00 EA	IC PATTERN GENERATOR	LSI ASIC #LIA3381-MC	
U018	A457040	001.00 EA	IC FRAMER 2	VLSI PER SA DWG 457	
U019	A327876	001.00 EA	IC CLOCK REC DIGITAL	LSI LIA3382-MC	
U020	A172455	001.00 EA	IC CMOS GATE AND 2-IN QUAD 14L-DIP	MM74HC08N	
U021	A081658	001.00 EA	IC TTL BUFFER HEX OPEN-COL	SGN SN7407N	
U022	A089590	001.00 EA	RESISTOR NETWORK 5 4.7K OHM 2% 6 SIP	4306R-101-472	
U023	A086514	001.00 EA	IC OP AMP JFET 8L-DIP 70C COMP DUAL	TL082ACP	
U024	A327875	001.00 EA	IC DS1/1C/2/3 ANALOG CLOCK REC	NSC ACK REC	
U025	A177105	001.00 EA	IC PLL 18 MHZ 16L-DIP	NSC MM74HC4046N	
U026	A355983	001.00 EA	IC CMOS INVERTER HEX UNBUFFER	MC74HCU04N	
U027	A176744	001.00 EA	OPT-ISLR 1.5KV PK FET PHODETR	H11F1	
U028	A084000	000.00 EA	VARIES WITH MODEL,SEE HIGHER ASSY FOR PN	PER S A DWG	
U029	A084000	000.00 EA	VARIES WITH MODEL,SEE HIGHER ASSY FOR PN	PER S A DWG	
U030	A330210	001.00 EA	IC CMOS FLIP-FLOP TYPE-D	MOS MC74HC374N	
U031	A084000	000.00 EA	VARIES WITH MODEL,SEE HIGHER ASSY FOR PN	PER S A DWG	
U032	A084000	000.00 EA	VARIES WITH MODEL,SEE HIGHER ASSY FOR PN	PER S A DWG	
U033	A178541	001.00 EA	IC CMOS BUFFER/LINE DR 10-BIT	AMD #AM 29C 827APC	
U034	A177003	001.00 EA	IC CMOS TRANSCVR BUS 10-BIT	AM29C861APC	
U035	A177003	001.00 EA	IC CMOS TRANSCVR BUS 10-BIT	AM29C861APC	
U036	A084000	000.00 EA	VARIES WITH MODEL,SEE HIGHER ASSY FOR PN	PER S A DWG	
U037	A178541	001.00 EA	IC CMOS BUFFER/LINE DR 10-BIT	AMD #AM 29C 827APC	
U038	A084000	000.00 EA	VARIES WITH MODEL,SEE HIGHER ASSY FOR PN	PER S A DWG	
U039	A176276	001.00 EA	IC MEM CMOS FIFO 64X4 ASYNC	CYP CY7C 403-25PC	
U040	A084000	000.00 EA	VARIES WITH MODEL,SEE HIGHER ASSY FOR PN	PER S A DWG	
U041	A177104	001.00 EA	IC PCM ENCDR/DCDR WITH FILTERS	TI TCM 2913J	
W001	A306222	001.00 EA	CABLE 5.5 IN CHABIN	PER SA DWG 306222	
XU001	A173737	001.00 EA	SOCKET 24 PIN DIP PC MT LOW PROFILE OPEN UL94V	610-24-CC-D	
XU002	A177011	001.00 EA	SOCKET 68 POS PLCC PC MT	PLCC-68-P-T	
XU003	A177011	001.00 EA	SOCKET 68 POS PLCC PC MT	PLCC-68-P-T	
XU004	A177011	001.00 EA	SOCKET 68 POS PLCC PC MT	PLCC-68-P-T	
XU005	A177011	001.00 EA	SOCKET 68 POS PLCC PC MT	PLCC-68-P-T	
XU009	A177092	001.00 EA	SOCKET 44 POS PLCC PC MT	PLCC-44-P-T	
XU010	A173737	001.00 EA	SOCKET 24 PIN DIP PC MT LOW PROFILE OPEN UL94V	610-24-CC-D	
XU017	A177011	001.00 EA	SOCKET 68 POS PLCC PC MT	PLCC-68-P-T	
XU018	A177011	001.00 EA	SOCKET 68 POS PLCC PC MT	PLCC-68-P-T	
XU019	A177011	001.00 EA	SOCKET 68 POS PLCC PC MT	PLCC-68-P-T	
XU024	A177092	001.00 EA	SOCKET 44 POS PLCC PC MT	PLCC-44-P-T	
XU028	A173737	001.00 EA	SOCKET 24 PIN DIP PC MT LOW PROFILE OPEN UL94V	610-24-CC-D	
XU029	A173737	001.00 EA	SOCKET 24 PIN DIP PC MT LOW PROFILE OPEN UL94V	610-24-CC-D	
XU030	A086897	001.00 EA	SOCKET 20 PIN DIP PC MT	RBN ICT-203-S-TG	
XU031	A177349	001.00 EA	SOCKET 32-PIN DIP .6W PC MT	ICT-326-S-TG	
XU032	A177349	001.00 EA	SOCKET 32-PIN DIP .6W PC MT	ICT-326-S-TG	
XU033	A173737	001.00 EA	SOCKET 24 PIN DIP PC MT LOW PROFILE OPEN UL94V	610-24-CC-D	
XU034	A173737	001.00 EA	SOCKET 24 PIN DIP PC MT LOW PROFILE OPEN UL94V	610-24-CC-D	
XU035	A173737	001.00 EA	SOCKET 24 PIN DIP PC MT LOW PROFILE OPEN UL94V	610-24-CC-D	
XU036	A173737	001.00 EA	SOCKET 24 PIN DIP PC MT LOW PROFILE OPEN UL94V	610-24-CC-D	

A307223 SUB-ASSY PWB DS3-DS1/DSO DEMUX A307223

Revision K
Effective: January 08, 1992

REF	SA PART	Qty	Description	Mfr Part	CAGE
XU037	A173737	001.00 EA	SOCKET 24 PIN DIP PC MT LOW PROFILE OPEN UL94V	610-24-CC-D	
XU038	A173737	001.00 EA	SOCKET 24 PIN DIP PC MT LOW PROFILE OPEN UL94V	610-24-CC-D	
XU040	A173737	001.00 EA	SOCKET 24 PIN DIP PC MT LOW PROFILE OPEN UL94V	610-24-CC-D	
XU041	A086897	001.00 EA	SOCKET 20 PIN DIP PC MT	RBN ICT-203-S-TG	
Y001	A318996	001.00 EA	CRYSTAL 1.544 MHZ SERIES .002%	PER SA SPEC. 318996	
Z001	A327940	001.00 EA	HYBRID 75 OHM DSX - 3	PER SA DWG.	
Z002	A327944	001.00 EA	HYBRID 100 OHM DS1 OUTPUT	PER SA DWG.	
000	A307221	000.00 EA	SCHEM PWB DS3-DS1/DSO DEMUX		
001	A458330	001.00 EA	PWB DS3-DS1/DSO DEMUX	PER SA DWG. 458330 O	
002	A083638	000.10 RL	TAPE PLYURTHN FOAM DBL FCE 1/16 T 1/2 W	MMM 4016	
005	A178482	001.00 EA	SPACER .321D.285OD .3L NYLON	BIVAR 938-300	

A309124 ASSY PWB XMTR DAS A309124

Revision F
Effective: June 13, 1991

REF	SA PART	Qty	Description	Mfr Part	CAGE
	A309714	000.00 EA	TRANSMIT BOARD TEST PROCEDURE	PER SA DWG 309714	42061
J005	A178481	001.00 EA	CONN HEADER DBL ROW RT ANG 1-PIN PC MT	TSW-101-09-G-D-RA	
J006	A178481	001.00 EA	CONN HEADER DBL ROW RT ANG 1-PIN PC MT	TSW-101-09-G-D-RA	
J011	A176125	001.00 EA	CONN COAX BNC FEM RT ANG PC MT	UCBJR20	
J012	A176125	001.00 EA	CONN COAX BNC FEM RT ANG PC MT	UCBJR20	
J013	A176125	001.00 EA	CONN COAX BNC FEM RT ANG PC MT	UCBJR20	
J017	A307232	001.00 EA	JACK PHONE 3-COND T-R AU RTANG	PER SA DWG.	
J019	A176125	001.00 EA	CONN COAX BNC FEM RT ANG PC MT	UCBJR20	
J021	A176125	001.00 EA	CONN COAX BNC FEM RT ANG PC MT	UCBJR20	
U018	A461092	001.00 EA	ASSY PAL PROGRAM U18 XMTR	PER SA DWG 461092	10110
U025	A309149	001.00 EA	ASSY PAL PRGM U25 XMTR DTA/DAS	PER SA DWG 309149	10110
U027	A458355	001.00 EA	ASSY PAL PRGM U27 XMTR DTA/DAS		
W001	A306221	001.00 EA	CABLE 10 IN. CHABIN	PER SA DWG 306221	
W002	A306221	001.00 EA	CABLE 10 IN. CHABIN	PER SA DWG 306221	
001	A309237	001.00 EA	SUB-ASSY PWB XMTR MDL AT9500		
002	M449215	001.00 EA	EPROM ASSEMBLY, TRANSMITTER DAS 9000	PER SA DWG 449215	42061
003	A309108	001.00 EA	BRACKET BOARD LEGEND-XMTR	PER SA DWG.	
005	A177365	002.00 EA	SPACER NO.4 ID 1/4 OD 3/32L NI	UNICORP S-503-M01-F0	
006	A071494	002.00 EA	NUT 4-40 UNC-2B,PLAIN-HEX,SST	PER MS35649-244	
007	A072321	002.00 EA	SCREW 4-40 X 3/8 F HD,82 DEG,SST	ATY 72321	
008	A073266	002.00 EA	WASHER-NO. 4- .125 .250 .022 AUS SST	PER ANSI B.18.22.1	
009	A073265	002.00 EA	WASHER NO. 4 LOCK EXT TOOTH CAD PLT STL	PER MS35335-29	96906
010	A082463	001.00 EA	EXTRACTOR PC BOARD	THC 5005-08N	

A309216 CBL ASSY MTRS/LIMS 3-AX L=AIR A309216

Revision -
Effective: July 01, 1990

REF	SA PART	Qty	Description	Mfr Part	CAGE
P001	A086399	001.00 EA	CONNECTR 3106E 28 11P	MS3106E-28-11P	96906
P002	A086396	001.00 EA	CONNECTR 3106E 28 11S	MS3106E-28-11S	96906
001	A310106	002.00 EA	SHELL BACK-CONNECTOR	GWM PER DESC 310106	
002	A310105	002.00 EA	RING SOLDER	SWR PER DESC 310105	
003	A086482	001.00 EA	CONN BOOT HEAT SHRINK RT ANG SZ 24 & 28	REMTEK #222D174-3/42	
004	A086481	001.00 EA	CONN BOOT HEAT SHRINK SIZE 24 & 28	REMTEK#B-202D174/42	
005	A087400	000.01 FT	CABLE 16-16AWG COND BRAID SHIELD	ANX #2BB-1616S	

A309237 SUB-ASSY PWB XMTR MDL AT9500 A309237

Revision F
Effective: Febuary 13, 1991

REF	SA PART	Qty	Description	Mfr Part	CAGE
	A309235	000.00 EA	SCHEMATIC XMTR MDL AT9500		
BB001	A177102	001.00 EA	BUS DISTRBTN 2-LYR VERT MT 36-PIN IN-LINE	RAZ QV-2 17.6.3 (.1)	
BB002	A177237	001.00 EA	BUS DISTRIBUTION 3 LAYER VERTICAL MT DIP	QV-3 4.10.1.2 (.2)	
C001	A083649	001.00 EA	CAPACITR 7-25 PF MIN CER DISC PC MT	538-011-B-7-25	
C002	A083649	001.00 EA	CAPACITR 7-25 PF MIN CER DISC PC MT	538-011-B-7-25	
C003	A080139	001.00 EA	CAPACITR .1 MF 50V CER MONO -20%/+80%	RPE122Z5U104Z050V	
C004	A080139	001.00 EA	CAPACITR .1 MF 50V CER MONO -20%/+80%	RPE122Z5U104Z050V	
C005	A083258	001.00 EA	CAPACITR CHIP .1 MF 50V	C1812C104M5XAH	
C006	A081210	001.00 EA	CAPACITR .01 MF 50V CER MONO X7R 10%	RPE121X7R103K50V	
C007	A080139	001.00 EA	CAPACITR .1 MF 50V CER MONO -20%/+80%	RPE122Z5U104Z050V	
C008	A081210	001.00 EA	CAPACITR .01 MF 50V CER MONO X7R 10%	RPE121X7R103K50V	
C009	A080139	001.00 EA	CAPACITR .1 MF 50V CER MONO -20%/+80%	RPE122Z5U104Z050V	
C010	A080139	001.00 EA	CAPACITR .1 MF 50V CER MONO -20%/+80%	RPE122Z5U104Z050V	
C011	A080139	001.00 EA	CAPACITR .1 MF 50V CER MONO -20%/+80%	RPE122Z5U104Z050V	
C012	A080139	001.00 EA	CAPACITR .1 MF 50V CER MONO -20%/+80%	RPE122Z5U104Z050V	
C013	A080139	001.00 EA	CAPACITR .1 MF 50V CER MONO -20%/+80%	RPE122Z5U104Z050V	
C014	A081210	001.00 EA	CAPACITR .01 MF 50V CER MONO X7R 10%	RPE121X7R103K50V	
C015	A081210	001.00 EA	CAPACITR .01 MF 50V CER MONO X7R 10%	RPE121X7R103K50V	
C016	A081210	001.00 EA	CAPACITR .01 MF 50V CER MONO X7R 10%	RPE121X7R103K50V	
C017	A081210	001.00 EA	CAPACITR .01 MF 50V CER MONO X7R 10%	RPE121X7R103K50V	
C018	A081210	001.00 EA	CAPACITR .01 MF 50V CER MONO X7R 10%	RPE121X7R103K50V	
C019	A080139	001.00 EA	CAPACITR .1 MF 50V CER MONO -20%/+80%	RPE122Z5U104Z050V	
C020	A174000	000.00 EA	NOT USED ON THIS ASSEMBLY		
C021	A083258	001.00 EA	CAPACITR CHIP .1 MF 50V	C1812C104M5XAH	
C022	A080139	001.00 EA	CAPACITR .1 MF 50V CER MONO -20%/+80%	RPE122Z5U104Z050V	
C023	A080139	001.00 EA	CAPACITR .1 MF 50V CER MONO -20%/+80%	RPE122Z5U104Z050V	
C024	A080139	001.00 EA	CAPACITR .1 MF 50V CER MONO -20%/+80%	RPE122Z5U104Z050V	
C025	A078600	000.00 FT	NOT ASSIGNED	FOR ENG ONLY	
C026	A078600	000.00 FT	NOT ASSIGNED	FOR ENG ONLY	
C027	A080139	001.00 EA	CAPACITR .1 MF 50V CER MONO -20%/+80%	RPE122Z5U104Z050V	
C028	A080139	001.00 EA	CAPACITR .1 MF 50V CER MONO -20%/+80%	RPE122Z5U104Z050V	
C029	A035656	001.00 EA	CAPACITR 100 MF 20V 10% SOLID TANT POL	T354M107K020AS	
C030	A080139	001.00 EA	CAPACITR .1 MF 50V CER MONO -20%/+80%	RPE122Z5U104Z050V	
C031	A080139	001.00 EA	CAPACITR .1 MF 50V CER MONO -20%/+80%	RPE122Z5U104Z050V	
C032	A035656	001.00 EA	CAPACITR 100 MF 20V 10% SOLID TANT POL	T354M107K020AS	
C033	A035656	001.00 EA	CAPACITR 100 MF 20V 10% SOLID TANT POL	T354M107K020AS	
C034	A080139	001.00 EA	CAPACITR .1 MF 50V CER MONO -20%/+80%	RPE122Z5U104Z050V	
C035	A080139	001.00 EA	CAPACITR .1 MF 50V CER MONO -20%/+80%	RPE122Z5U104Z050V	
C036	A078600	000.00 FT	NOT ASSIGNED	FOR ENG ONLY	
C037	A080139	001.00 EA	CAPACITR .1 MF 50V CER MONO -20%/+80%	RPE122Z5U104Z050V	
C038	M078600	000.00 FT	NOT ASSIGNED	NOT ASSIGNED	42061
C039	M078600	000.00 FT	NOT ASSIGNED	NOT ASSIGNED	42061
C040	A094272	001.00 EA	CAPACITR CHIP .001 MF 100V	PER DWG 94272	
C041	A094272	001.00 EA	CAPACITR CHIP .001 MF 100V	PER DWG 94272	
C042	A094272	001.00 EA	CAPACITR CHIP .001 MF 100V	PER DWG 94272	
DS001	A177211	001.00 EA	LAMP LED-RSTR RED PC MT 5V 3MA	555-2007	
DS002	A177211	001.00 EA	LAMP LED-RSTR RED PC MT 5V 3MA	555-2007	
DS003	A177211	001.00 EA	LAMP LED-RSTR RED PC MT 5V 3MA	555-2007	
DS004	A177211	001.00 EA	LAMP LED-RSTR RED PC MT 5V 3MA	555-2007	
E001	A177971	001.00 EA	CHOKE WIDE-BAND 3B .236X394L	VK20009-3B	
E002	A177971	001.00 EA	CHOKE WIDE-BAND 3B .236X394L	VK20009-3B	
E003	A177971	001.00 EA	CHOKE WIDE-BAND 3B .236X394L	VK20009-3B	
E013	A177971	001.00 EA	CHOKE WIDE-BAND 3B .236X394L	VK20009-3B	
J001	A173712	001.00 EA	CONN RECT 96-COND MALE PNL MT RT ANG PC MT	532505-1	00779
J002	A173712	001.00 EA	CONN RECT 96-COND MALE PNL MT RT ANG PC MT	532505-1	00779

A309237 SUB-ASSY PWB XMTR MDL AT9500 A309237

Revision F
Effective: Febuary 13, 1991

REF	SA PART	Qty	Description	Mfr Part	CAGE
J003	A174000	000.00 EA	NOT USED ON THIS ASSEMBLY		
J004	A174000	000.00 EA	NOT USED ON THIS ASSEMBLY		
J005	A174000	000.00 EA	NOT USED ON THIS ASSEMBLY		
J006	A174000	000.00 EA	NOT USED ON THIS ASSEMBLY		
J007	A174000	000.00 EA	NOT USED ON THIS ASSEMBLY		
J008	A174000	000.00 EA	NOT USED ON THIS ASSEMBLY		
J009	A174000	000.00 EA	NOT USED ON THIS ASSEMBLY		
J010	A174000	000.00 EA	NOT USED ON THIS ASSEMBLY		
J011	A174000	000.00 EA	NOT USED ON THIS ASSEMBLY		
J012	A174000	000.00 EA	NOT USED ON THIS ASSEMBLY		
J013	A174000	000.00 EA	NOT USED ON THIS ASSEMBLY		
J014	A174000	000.00 EA	NOT USED ON THIS ASSEMBLY		
J015	A174000	000.00 EA	NOT USED ON THIS ASSEMBLY		
J016	A174000	000.00 EA	NOT USED ON THIS ASSEMBLY		
J017	A174000	000.00 EA	NOT USED ON THIS ASSEMBLY		
J018	A174000	000.00 EA	NOT USED ON THIS ASSEMBLY		
J019	A174000	000.00 EA	NOT USED ON THIS ASSEMBLY		
J020	A174000	000.00 EA	NOT USED ON THIS ASSEMBLY		
J021	A174000	000.00 EA	NOT USED ON THIS ASSEMBLY		
J022	A178481	001.00 EA	CONN HEADER DBL ROW RT ANG 1-PIN PC MT	TSW-101-09-G-D-RA	
J023	A178481	001.00 EA	CONN HEADER DBL ROW RT ANG 1-PIN PC MT	TSW-101-09-G-D-RA	
L001	A079558	001.00 EA	INDUCTOR .33 UH SUBMIN SHLD ENCAP 10%	WEE-WEE-.33	
Q001	A077148	001.00 EA	TRANSSTR 2N3251 PNP SIL	2N3251	
R001	A078600	000.00 FT	NOT ASSIGNED	FOR ENG ONLY	
R002	A087839	001.00 EA	POT 5K OHM 1/2 CER 3/8 SQ VERT ADJ 25T	3299W-1-502	
R003	A087839	001.00 EA	POT 5K OHM 1/2 CER 3/8 SQ VERT ADJ 25T	3299W-1-502	
R004	A078600	000.00 FT	NOT ASSIGNED	FOR ENG ONLY	
R005	A074722	001.00 EA	RESISTOR 4.7K OHM 1/4W 5% COMP	RCR07G472JS	
R006	A074722	001.00 EA	RESISTOR 4.7K OHM 1/4W 5% COMP	RCR07G472JS	
R007	A074722	001.00 EA	RESISTOR 4.7K OHM 1/4W 5% COMP	RCR07G472JS	
R008	A074722	001.00 EA	RESISTOR 4.7K OHM 1/4W 5% COMP	RCR07G472JS	
R009	A074722	001.00 EA	RESISTOR 4.7K OHM 1/4W 5% COMP	RCR07G472JS	
R010	A071917	001.00 EA	RESISTOR 330 OHM 1/4W 5% COMP	RCR07G331JS	
R011	A074733	001.00 EA	RESISTOR 18K OHM 1/4W 5% COMP	CR07G183JS	
R012	A078600	000.00 FT	NOT ASSIGNED	FOR ENG ONLY	
R013	A078600	000.00 FT	NOT ASSIGNED	FOR ENG ONLY	
R014	A074722	001.00 EA	RESISTOR 4.7K OHM 1/4W 5% COMP	RCR07G472JS	
R015	A074710	001.00 EA	RESISTOR 2.2K OHM 1/4W 5% COMP	RCR07G222JS	
R016	A071917	001.00 EA	RESISTOR 330 OHM 1/4W 5% COMP	RCR07G331JS	
R017	A074714	001.00 EA	RESISTOR 3.3K OHM 1/4W 5% COMP	CR07G332JS	
R018	A074733	001.00 EA	RESISTOR 18K OHM 1/4W 5% COMP	CR07G183JS	
R019	A078600	000.00 FT	NOT ASSIGNED	FOR ENG ONLY	
R020	A174000	000.00 EA	NOT USED ON THIS ASSEMBLY		
R021	A083089	001.00 EA	RESISTOR 75.0 OHM RN55C 1% MTL FLM	XZ RN55C75R0F T&R	
R022	M078600	000.00 FT	NOT ASSIGNED	NOT ASSIGNED	42061
R023	M078600	000.00 FT	NOT ASSIGNED	NOT ASSIGNED	42061
R024	A077592	001.00 EA	RESISTOR 120 OHM 1/4W 5% COMP	RCR07G121JS	
R025	A075597	001.00 EA	RESISTOR 82 OHM 1/4W 5% COMP	RCR07G820JS	
R026	A074714	001.00 EA	RESISTOR 3.3K OHM 1/4W 5% COMP	CR07G332JS	
R027	A074733	001.00 EA	RESISTOR 18K OHM 1/4W 5% COMP	CR07G183JS	
R028	A174000	000.00 EA	NOT USED ON THIS ASSEMBLY		
R029	A078600	000.00 FT	NOT ASSIGNED	FOR ENG ONLY	
R030	A074702	001.00 EA	RESISTOR 1.0K OHM 1/4W 5% COMP	RCR07G102JS	
R031	A071917	001.00 EA	RESISTOR 330 OHM 1/4W 5% COMP	RCR07G331JS	

A309237 SUB-ASSY PWB XMTR MDL AT9500 A309237

Revision F
Effective: Febuary 13, 1991

REF	SA PART	Qty	Description	Mfr Part	CAGE
R032	A083853	001.00 EA	RESISTOR 82.5 OHM RN55C 1% MTL FLM	XZ RN55C82R5F	
R033	A078927	001.00 EA	RESISTOR 1.65K OHM RN55C 1% MTL FLM	DP RN55C1651F	
R034	A078927	001.00 EA	RESISTOR 1.65K OHM RN55C 1% MTL FLM	DP RN55C1651F	
R035	A074710	001.00 EA	RESISTOR 2.2K OHM 1/4W 5% COMP	RCR07G222JS	
R036	A079123	001.00 EA	RESISTOR 301 OHM RN55C 1% MTL FLM	DP RN55C3010F	
R037	A079123	001.00 EA	RESISTOR 301 OHM RN55C 1% MTL FLM	DP RN55C3010F	
R038	A074698	001.00 EA	RESISTOR 560 OHM 1/4W 5% COMP	RCR07G561JS	
R039	A083899	001.00 EA	RESISTOR 2.26K OHM RN55C 1% MTL FLM	XZ RN55C2261F	
R040	A080380	001.00 EA	RESISTOR 2.74K OHM RN55C 1% MTL FLM	DP RN55C2741F	
R041	M078600	000.00 FT	NOT ASSIGNED	NOT ASSIGNED	42061
R042	A078600	000.00 FT	NOT ASSIGNED	FOR ENG ONLY	
R043	A077592	001.00 EA	RESISTOR 120 OHM 1/4W 5% COMP	RCR07G121JS	
R044	A075597	001.00 EA	RESISTOR 82 OHM 1/4W 5% COMP	RCR07G820JS	
R045	A074718	001.00 EA	RESISTOR 3.9K OHM 1/4W 5% COMP	RCR07G392JS	
R046	A174000	000.00 EA	NOT USED ON THIS ASSEMBLY		
R047	A074722	001.00 EA	RESISTOR 4.7K OHM 1/4W 5% COMP	RCR07G472JS	
R048	A074727	001.00 EA	RESISTOR 10K OHM 1/4W 5% COMP	RCR07G103JS	
R049	A074722	001.00 EA	RESISTOR 4.7K OHM 1/4W 5% COMP	RCR07G472JS	
R050	A078600	000.00 FT	NOT ASSIGNED	FOR ENG ONLY	
R051	A074722	001.00 EA	RESISTOR 4.7K OHM 1/4W 5% COMP	RCR07G472JS	
R052	A074722	001.00 EA	RESISTOR 4.7K OHM 1/4W 5% COMP	RCR07G472JS	
R053	A078600	000.00 FT	NOT ASSIGNED	FOR ENG ONLY	
R054	A074722	001.00 EA	RESISTOR 4.7K OHM 1/4W 5% COMP	RCR07G472JS	
R055	A075551	001.00 EA	RESISTOR 10 OHM 1/4W 5% COMP	RCR07G100JS	
R056	A074722	001.00 EA	RESISTOR 4.7K OHM 1/4W 5% COMP	RCR07G472JS	
R057	A074722	001.00 EA	RESISTOR 4.7K OHM 1/4W 5% COMP	RCR07G472JS	
R058	A078600	000.00 FT	NOT ASSIGNED	FOR ENG ONLY	
R059	A074706	001.00 EA	RESISTOR 1.5K OHM 1/4W 5% COMP	RCR07G152JS	
R060	A074722	001.00 EA	RESISTOR 4.7K OHM 1/4W 5% COMP	RCR07G472JS	
TP001	A082909	001.00 EA	TERMINAL PRESS MT DISCONNECT .058 PIN	60599-1	00779
T001	A177027	001.00 EA	XFMR 1;1.37CT PRI L 680UH	2745C	
U001	A304112	001.00 EA	OSCILLATOR CLOCK 44736 MGH	PER SA DESC	
U002	A177395	001.00 EA	IC CMOS MUX DUAL 4LINE TO 1 3S	TI 74AC 11253N	
U003	A173221	001.00 EA	IC CMOS GATE NAND 2-IN QUAD 14L-DIP	MM74HC00N	
U004	A327878	001.00 EA	IC PATTERN GENERATOR	LSI ASIC #LIA3381-MC	
U005	A327877	001.00 EA	IC FRAMER	LSI ASIC #LIA 3324-M	
U006	A327876	001.00 EA	IC CLOCK REC DIGITAL	LSI LIA3382-MC	
U007	A174506	001.00 EA	RESISTOR NETWORK 4 100 OHM 2%	4308R-102-101	
U008	A252731	001.00 EA	OSCLTR CLOCK 6.176MHZ MDL 9500	03-02003-001	
U009	A172465	001.00 EA	IC CMOS COUNTER 4-BIT BINARY	MOT MC74HC393N	
U010	A174228	001.00 EA	IC CMOS MULTIPLEXER 8-BIT/1-CH	MOT MC74HC251N	
U011	A173221	001.00 EA	IC CMOS GATE NAND 2-IN QUAD 14L-DIP	MM74HC00N	
U012	A327878	001.00 EA	IC PATTERN GENERATOR	LSI ASIC #LIA3381-MC	
U013	A457040	001.00 EA	IC FRAMER 2	VLSI PER SA DWG 457	
U014	A327876	001.00 EA	IC CLOCK REC DIGITAL	LSI LIA3382-MC	
U015	A172455	001.00 EA	IC CMOS GATE AND 2-IN QUAD 14L-DIP	MM74HC08N	
U016	A089239	001.00 EA	IC ECL LINE RECEIVER TRIPLE	MC10116L	
U017	A174227	001.00 EA	IC CMOS LATCH 8-BIT ADDRESSABLE	CD74HC259E	
U018	A084000	000.00 EA	VARIES WITH MODEL,SEE HIGHER ASSY FOR PN	PER S A DWG	
U019	A084000	000.00 EA	VARIES WITH MODEL,SEE HIGHER ASSY FOR PN	PER S A DWG	
U020	A081658	001.00 EA	IC TTL BUFFER HEX OPEN-COL	SGN SN7407N	
U021	A174111	001.00 EA	IC CMOS LATCH 8-BIT 3-STATE	RCA CD74HC373E	
U022	A177003	001.00 EA	IC CMOS TRANSCVR BUS 10-BIT	AM29C861APC	
U023	A177003	001.00 EA	IC CMOS TRANSCVR BUS 10-BIT	AM29C861APC	

A309237 SUB-ASSY PWB XMTR MDL AT9500 A309237

Revision F
Effective: Febuary 13, 1991

REF	SA PART	Qty	Description	Mfr Part	CAGE
U024	A178541	001.00 EA	IC CMOS BUFFER/LINE DR 10-BIT	AMD #AM 29C 827APC	
U025	A084000	000.00 EA	VARIES WITH MODEL,SEE HIGHER ASSY FOR PN	PER S A DWG	
U026	A178541	001.00 EA	IC CMOS BUFFER/LINE DR 10-BIT	AMD #AM 29C 827APC	
U027	A084000	000.00 EA	VARIES WITH MODEL,SEE HIGHER ASSY FOR PN	PER S A DWG	
U028	A174000	000.00 EA	NOT USED ON THIS ASSEMBLY		
U029	M078600	000.00 FT	NOT ASSIGNED	NOT ASSIGNED	42061
XU004	A177011	001.00 EA	SOCKET 68 POS PLCC PC MT	PLCC-68-P-T	
XU005	A177011	001.00 EA	SOCKET 68 POS PLCC PC MT	PLCC-68-P-T	
XU006	A177011	001.00 EA	SOCKET 68 POS PLCC PC MT	PLCC-68-P-T	
XU012	A177011	001.00 EA	SOCKET 68 POS PLCC PC MT	PLCC-68-P-T	
XU013	A177011	001.00 EA	SOCKET 68 POS PLCC PC MT	PLCC-68-P-T	
XU014	A177011	001.00 EA	SOCKET 68 POS PLCC PC MT	PLCC-68-P-T	
XU018	A173737	001.00 EA	SOCKET 24 PIN DIP PC MT LOW PROFILE OPEN UL94V	610-24-CC-D	
XU019	A177349	001.00 EA	SOCKET 32-PIN DIP .6W PC MT	ICT-326-S-TG	
XU021	A086897	001.00 EA	SOCKET 20 PIN DIP PC MT	RBN ICT-203-S-TG	
XU022	A173737	001.00 EA	SOCKET 24 PIN DIP PC MT LOW PROFILE OPEN UL94V	610-24-CC-D	
XU023	A173737	001.00 EA	SOCKET 24 PIN DIP PC MT LOW PROFILE OPEN UL94V	610-24-CC-D	
XU024	A173737	001.00 EA	SOCKET 24 PIN DIP PC MT LOW PROFILE OPEN UL94V	610-24-CC-D	
XU025	A173737	001.00 EA	SOCKET 24 PIN DIP PC MT LOW PROFILE OPEN UL94V	610-24-CC-D	
XU026	A173737	001.00 EA	SOCKET 24 PIN DIP PC MT LOW PROFILE OPEN UL94V	610-24-CC-D	
XU027	A173737	001.00 EA	SOCKET 24 PIN DIP PC MT LOW PROFILE OPEN UL94V	610-24-CC-D	
Z001	A327940	001.00 EA	HYBRID 75 OHM DSX - 3	PER SA DWG.	
Z002	A327942	001.00 EA	HYBRID 75 OHM TRIPPLE BUF	PER SA DWG	
Z003	A327944	001.00 EA	HYBRID 100 OHM DS1 OUTPUT	PER SA DWG.	
001	A309236	001.00 EA	PWB XMTR MDL AT9500	PER SA DWG. 309236 A	
002	A317056	002.00 EA	DUAL IN-LINE PAD	814-045	

A309242 SUB-ASSY PWB DS3 2-PT MONITOR A309242

Revision C
Effective: November 01, 1991

REF	SA PART	Qty	Description	Mfr Part	CAGE
	A309241	000.00 EA	SCHEM DS3 2-POINT MONITOR		
BB001	A177102	001.00 EA	BUS DISTRBTN 2-LYR VERT MT 36-PIN IN-LINE	RAZ QV-2 17.6.3 (.1)	
BB002	A177102	001.00 EA	BUS DISTRBTN 2-LYR VERT MT 36-PIN IN-LINE	RAZ QV-2 17.6.3 (.1)	
CR001	A071122	001.00 EA	DIODE 1N914 SIL 75V 75MA	1N914	
CR002	A071122	001.00 EA	DIODE 1N914 SIL 75V 75MA	1N914	
CR003	A071122	001.00 EA	DIODE 1N914 SIL 75V 75MA	1N914	
CR004	A071122	001.00 EA	DIODE 1N914 SIL 75V 75MA	1N914	
CR005	A071122	001.00 EA	DIODE 1N914 SIL 75V 75MA	1N914	
CR006	A071122	001.00 EA	DIODE 1N914 SIL 75V 75MA	1N914	
C001	A174000	000.00 EA	NOT USED ON THIS ASSEMBLY		
C002	A080139	001.00 EA	CAPACITR .1 MF 50V CER MONO -20%/+80%	RPE122Z5U104Z050V	
C003	A081095	001.00 EA	CAPACITR 3.3 MF 50V CER MONO 20%	3C37Z5U335M050B	
C004	A174000	000.00 EA	NOT USED ON THIS ASSEMBLY		
C005	A080139	001.00 EA	CAPACITR .1 MF 50V CER MONO -20%/+80%	RPE122Z5U104Z050V	
C006	A080139	001.00 EA	CAPACITR .1 MF 50V CER MONO -20%/+80%	RPE122Z5U104Z050V	
C007	A080139	001.00 EA	CAPACITR .1 MF 50V CER MONO -20%/+80%	RPE122Z5U104Z050V	
C008	A174000	000.00 EA	NOT USED ON THIS ASSEMBLY		
C009	A174000	000.00 EA	NOT USED ON THIS ASSEMBLY		
C010	A080139	001.00 EA	CAPACITR .1 MF 50V CER MONO -20%/+80%	RPE122Z5U104Z050V	
C011	A070470	001.00 EA	CAPACITR 10 PF 500V SILVER MICA 5%	CD15CD100J03	
C012	A174000	000.00 EA	NOT USED ON THIS ASSEMBLY		
C013	A070470	001.00 EA	CAPACITR 10 PF 500V SILVER MICA 5%	CD15CD100J03	
C014	A081210	001.00 EA	CAPACITR .01 MF 50V CER MONO X7R 10%	RPE121X7R103K50V	
C015	A035656	001.00 EA	CAPACITR 100 MF 20V 10% SOLID TANT POL	T354M107K020AS	
C016	A081210	001.00 EA	CAPACITR .01 MF 50V CER MONO X7R 10%	RPE121X7R103K50V	
C017	A070474	001.00 EA	CAPACITR 10 PF 1 KV CER DISC S2L 10%	DD100	
C018	A077965	001.00 EA	CAPACITR 51 PF 500V SILVER MICA 2%	CD6ED510G03	
C019	A080139	001.00 EA	CAPACITR .1 MF 50V CER MONO -20%/+80%	RPE122Z5U104Z050V	
C020	A070474	001.00 EA	CAPACITR 10 PF 1 KV CER DISC S2L 10%	DD100	
C021	A080139	001.00 EA	CAPACITR .1 MF 50V CER MONO -20%/+80%	RPE122Z5U104Z050V	
C022	A080139	001.00 EA	CAPACITR .1 MF 50V CER MONO -20%/+80%	RPE122Z5U104Z050V	
C023	A080139	001.00 EA	CAPACITR .1 MF 50V CER MONO -20%/+80%	RPE122Z5U104Z050V	
C024	A080139	001.00 EA	CAPACITR .1 MF 50V CER MONO -20%/+80%	RPE122Z5U104Z050V	
C025	A035656	001.00 EA	CAPACITR 100 MF 20V 10% SOLID TANT POL	T354M107K020AS	
C026	A077965	001.00 EA	CAPACITR 51 PF 500V SILVER MICA 2%	CD6ED510G03	
C027	A080139	001.00 EA	CAPACITR .1 MF 50V CER MONO -20%/+80%	RPE122Z5U104Z050V	
C028	A080139	001.00 EA	CAPACITR .1 MF 50V CER MONO -20%/+80%	RPE122Z5U104Z050V	
C029	A035656	001.00 EA	CAPACITR 100 MF 20V 10% SOLID TANT POL	T354M107K020AS	
C030	A080139	001.00 EA	CAPACITR .1 MF 50V CER MONO -20%/+80%	RPE122Z5U104Z050V	
C031	A080139	001.00 EA	CAPACITR .1 MF 50V CER MONO -20%/+80%	RPE122Z5U104Z050V	
C032	A080139	001.00 EA	CAPACITR .1 MF 50V CER MONO -20%/+80%	RPE122Z5U104Z050V	
C033	A080139	001.00 EA	CAPACITR .1 MF 50V CER MONO -20%/+80%	RPE122Z5U104Z050V	
C034	A077965	001.00 EA	CAPACITR 51 PF 500V SILVER MICA 2%	CD6ED510G03	
C035	A080139	001.00 EA	CAPACITR .1 MF 50V CER MONO -20%/+80%	RPE122Z5U104Z050V	
C036	A174000	000.00 EA	NOT USED ON THIS ASSEMBLY		
C037	A081095	001.00 EA	CAPACITR 3.3 MF 50V CER MONO 20%	3C37Z5U335M050B	
C038	A174000	000.00 EA	NOT USED ON THIS ASSEMBLY		
C039	A081095	001.00 EA	CAPACITR 3.3 MF 50V CER MONO 20%	3C37Z5U335M050B	
C040	A080139	001.00 EA	CAPACITR .1 MF 50V CER MONO -20%/+80%	RPE122Z5U104Z050V	
C041	A174000	000.00 EA	NOT USED ON THIS ASSEMBLY		
C042	A174000	000.00 EA	NOT USED ON THIS ASSEMBLY		
C043	A080139	001.00 EA	CAPACITR .1 MF 50V CER MONO -20%/+80%	RPE122Z5U104Z050V	
C044	A070470	001.00 EA	CAPACITR 10 PF 500V SILVER MICA 5%	CD15CD100J03	
C045	A174000	000.00 EA	NOT USED ON THIS ASSEMBLY		
C046	A070470	001.00 EA	CAPACITR 10 PF 500V SILVER MICA 5%	CD15CD100J03	

A309242 SUB-ASSY PWB DS3 2-PT MONITOR A309242

Revision C
Effective: November 01, 1991

REF	SA PART	Qty	Description	Mfr Part	CAGE
C047	A081210	001.00 EA	CAPACITR .01 MF 50V CER MONO X7R 10%	RPE121X7R103K50V	
C048	A081210	001.00 EA	CAPACITR .01 MF 50V CER MONO X7R 10%	RPE121X7R103K50V	
C049	A070474	001.00 EA	CAPACITR 10 PF 1 KV CER DISC S2L 10%	DD100	
C050	A035656	001.00 EA	CAPACITR 100 MF 20V 10% SOLID TANT POL	T354M107K020AS	
C051	A077965	001.00 EA	CAPACITR 51 PF 500V SILVER MICA 2%	CD6ED510G03	
C052	A080139	001.00 EA	CAPACITR .1 MF 50V CER MONO -20%/+80%	RPE122Z5U104Z050V	
C053	A070474	001.00 EA	CAPACITR 10 PF 1 KV CER DISC S2L 10%	DD100	
C054	A080139	001.00 EA	CAPACITR .1 MF 50V CER MONO -20%/+80%	RPE122Z5U104Z050V	
C055	A080139	001.00 EA	CAPACITR .1 MF 50V CER MONO -20%/+80%	RPE122Z5U104Z050V	
C056	A080139	001.00 EA	CAPACITR .1 MF 50V CER MONO -20%/+80%	RPE122Z5U104Z050V	
C057	A080139	001.00 EA	CAPACITR .1 MF 50V CER MONO -20%/+80%	RPE122Z5U104Z050V	
C058	A035656	001.00 EA	CAPACITR 100 MF 20V 10% SOLID TANT POL	T354M107K020AS	
C059	A077965	001.00 EA	CAPACITR 51 PF 500V SILVER MICA 2%	CD6ED510G03	
C060	A080139	001.00 EA	CAPACITR .1 MF 50V CER MONO -20%/+80%	RPE122Z5U104Z050V	
C061	A080139	001.00 EA	CAPACITR .1 MF 50V CER MONO -20%/+80%	RPE122Z5U104Z050V	
C062	A035656	001.00 EA	CAPACITR 100 MF 20V 10% SOLID TANT POL	T354M107K020AS	
C063	A080139	001.00 EA	CAPACITR .1 MF 50V CER MONO -20%/+80%	RPE122Z5U104Z050V	
C064	A080139	001.00 EA	CAPACITR .1 MF 50V CER MONO -20%/+80%	RPE122Z5U104Z050V	
C065	A080139	001.00 EA	CAPACITR .1 MF 50V CER MONO -20%/+80%	RPE122Z5U104Z050V	
C066	A080139	001.00 EA	CAPACITR .1 MF 50V CER MONO -20%/+80%	RPE122Z5U104Z050V	
C067	A077965	001.00 EA	CAPACITR 51 PF 500V SILVER MICA 2%	CD6ED510G03	
C068	A080139	001.00 EA	CAPACITR .1 MF 50V CER MONO -20%/+80%	RPE122Z5U104Z050V	
C069	A174000	000.00 EA	NOT USED ON THIS ASSEMBLY		
C070	A174000	000.00 EA	NOT USED ON THIS ASSEMBLY		
C071	A078600	001.00 FT	NOT ASSIGNED	FOR ENG ONLY	
C072	A174000	000.00 EA	NOT USED ON THIS ASSEMBLY		
C073	A174000	000.00 EA	NOT USED ON THIS ASSEMBLY		
C074	A174000	000.00 EA	NOT USED ON THIS ASSEMBLY		
C075	A174000	000.00 EA	NOT USED ON THIS ASSEMBLY		
C076	A174000	000.00 EA	NOT USED ON THIS ASSEMBLY		
C077	A080139	001.00 EA	CAPACITR .1 MF 50V CER MONO -20%/+80%	RPE122Z5U104Z050V	
C078	A174000	000.00 EA	NOT USED ON THIS ASSEMBLY		
C079	A080139	001.00 EA	CAPACITR .1 MF 50V CER MONO -20%/+80%	RPE122Z5U104Z050V	
C080	A035656	001.00 EA	CAPACITR 100 MF 20V 10% SOLID TANT POL	T354M107K020AS	
C081	A035656	001.00 EA	CAPACITR 100 MF 20V 10% SOLID TANT POL	T354M107K020AS	
C082	A080139	001.00 EA	CAPACITR .1 MF 50V CER MONO -20%/+80%	RPE122Z5U104Z050V	
C083	A173733	001.00 EA	CAPACITR IC BYPASS FOR .3W 24L-DIP .03MF	303Z2A	
C084	A173733	001.00 EA	CAPACITR IC BYPASS FOR .3W 24L-DIP .03MF	303Z2A	
C085	A083258	001.00 EA	CAPACITR CHIP .1 MF 50V	C1812C104M5XAH	
C086	A083258	001.00 EA	CAPACITR CHIP .1 MF 50V	C1812C104M5XAH	
C087	A083258	001.00 EA	CAPACITR CHIP .1 MF 50V	C1812C104M5XAH	
C088	A083258	001.00 EA	CAPACITR CHIP .1 MF 50V	C1812C104M5XAH	
C089	A083258	001.00 EA	CAPACITR CHIP .1 MF 50V	C1812C104M5XAH	
C090	A083258	001.00 EA	CAPACITR CHIP .1 MF 50V	C1812C104M5XAH	
C091	A083258	001.00 EA	CAPACITR CHIP .1 MF 50V	C1812C104M5XAH	
C092	A083258	001.00 EA	CAPACITR CHIP .1 MF 50V	C1812C104M5XAH	
C093	A174000	000.00 EA	NOT USED ON THIS ASSEMBLY		
C094	A174000	000.00 EA	NOT USED ON THIS ASSEMBLY		
C095	A174000	000.00 EA	NOT USED ON THIS ASSEMBLY		
C096	A174000	000.00 EA	NOT USED ON THIS ASSEMBLY		
C097	A174000	000.00 EA	NOT USED ON THIS ASSEMBLY		
C098	A174000	000.00 EA	NOT USED ON THIS ASSEMBLY		
C099	A080139	001.00 EA	CAPACITR .1 MF 50V CER MONO -20%/+80%	RPE122Z5U104Z050V	
C100	A080139	001.00 EA	CAPACITR .1 MF 50V CER MONO -20%/+80%	RPE122Z5U104Z050V	

A309242 SUB-ASSY PWB DS3 2-PT MONITOR A309242

Revision C
Effective: November 01, 1991

REF	SA PART	Qty	Description	Mfr Part	CAGE
DS001	A177211	001.00 EA	LAMP LED-RSTR RED PC MT 5V 3MA	555-2007	
DS002	A177211	001.00 EA	LAMP LED-RSTR RED PC MT 5V 3MA	555-2007	
DS003	A177211	001.00 EA	LAMP LED-RSTR RED PC MT 5V 3MA	555-2007	
DS004	A177211	001.00 EA	LAMP LED-RSTR RED PC MT 5V 3MA	555-2007	
E017	A177971	001.00 EA	CHOKE WIDE-BAND 3B .236X394L	VK20009-3B	
J001	A174000	000.00 EA	NOT USED ON THIS ASSEMBLY		
J002	A174000	000.00 EA	NOT USED ON THIS ASSEMBLY		
J003	A087366	001.00 EA	CONN HDR SGL ROW STR 3-PIN PC MT OPEN .318 HT	87220-3	00779
J004	A174000	000.00 EA	NOT USED ON THIS ASSEMBLY		
J005	A174000	000.00 EA	NOT USED ON THIS ASSEMBLY		
J006	A174000	000.00 EA	NOT USED ON THIS ASSEMBLY		
J007	A176125	001.00 EA	CONN COAX BNC FEM RT ANG PC MT	UCBJR20	
J008	A174000	000.00 EA	NOT USED ON THIS ASSEMBLY		
J009	A174000	000.00 EA	NOT USED ON THIS ASSEMBLY		
J010	A087366	001.00 EA	CONN HDR SGL ROW STR 3-PIN PC MT OPEN .318 HT	87220-3	00779
J011	A174000	000.00 EA	NOT USED ON THIS ASSEMBLY		
J012	A174000	000.00 EA	NOT USED ON THIS ASSEMBLY		
J013	A174000	000.00 EA	NOT USED ON THIS ASSEMBLY		
J014	A174000	000.00 EA	NOT USED ON THIS ASSEMBLY		
J015	A176125	001.00 EA	CONN COAX BNC FEM RT ANG PC MT	UCBJR20	
J016	A174000	000.00 EA	NOT USED ON THIS ASSEMBLY		
J017	A174000	000.00 EA	NOT USED ON THIS ASSEMBLY		
J018	A078600	000.00 FT	NOT ASSIGNED	FOR ENG ONLY	
J019	A078600	000.00 FT	NOT ASSIGNED	FOR ENG ONLY	
J020	A173712	001.00 EA	CONN RECT 96-COND MALE PNL MT RT ANG PC MT	532505-1	00779
J021	A173712	001.00 EA	CONN RECT 96-COND MALE PNL MT RT ANG PC MT	532505-1	00779
K001	A177023	001.00 EA	RELAY 5VDC DPDT DIP SEALED	DF2E-DC5V	
K002	A177023	001.00 EA	RELAY 5VDC DPDT DIP SEALED	DF2E-DC5V	
L001	A174000	000.00 EA	NOT USED ON THIS ASSEMBLY		
L002	A078716	001.00 EA	INDUCTOR 100 UH SUBMIN UNSHLD 10%	IR-2 100UH	
L003	A078716	001.00 EA	INDUCTOR 100 UH SUBMIN UNSHLD 10%	IR-2 100UH	
L004	A077944	001.00 EA	INDUCTOR .27 UH SUBMIN UNSHLD 10%	IR-2 .27UH	
L005	A174000	000.00 EA	NOT USED ON THIS ASSEMBLY		
L006	A078716	001.00 EA	INDUCTOR 100 UH SUBMIN UNSHLD 10%	IR-2 100UH	
L007	A078716	001.00 EA	INDUCTOR 100 UH SUBMIN UNSHLD 10%	IR-2 100UH	
L008	A077944	001.00 EA	INDUCTOR .27 UH SUBMIN UNSHLD 10%	IR-2 .27UH	
L009	A078600	000.00 FT	NOT ASSIGNED	FOR ENG ONLY	
P001	A086884	001.00 EA	JUMPER FEMALE INSULATED .10 SPACING	65474-004	
P002	A086884	001.00 EA	JUMPER FEMALE INSULATED .10 SPACING	65474-004	
Q001	A079660	001.00 EA	TRANSSTR 2N4093 FET N-CHNL JUNC	2N4093	
Q002	A174224	001.00 EA	TRANSSTR MRF-571 NPN SIL	MRF-571	
Q003	A083032	001.00 EA	TRANSSTR 2N2222A NPN SIL	FSC 2N2222A	
Q004	A079660	001.00 EA	TRANSSTR 2N4093 FET N-CHNL JUNC	2N4093	
Q005	A174224	001.00 EA	TRANSSTR MRF-571 NPN SIL	MRF-571	
Q006	A083032	001.00 EA	TRANSSTR 2N2222A NPN SIL	FSC 2N2222A	
Q007	A174000	000.00 EA	NOT USED ON THIS ASSEMBLY		
R001	A074722	001.00 EA	RESISTOR 4.7K OHM 1/4W 5% COMP	RCR07G472JS	
R002	A174000	000.00 EA	NOT USED ON THIS ASSEMBLY		
R003	A074722	001.00 EA	RESISTOR 4.7K OHM 1/4W 5% COMP	RCR07G472JS	
R004	A174000	000.00 EA	NOT USED ON THIS ASSEMBLY		
R005	A074722	001.00 EA	RESISTOR 4.7K OHM 1/4W 5% COMP	RCR07G472JS	
R006	A074722	001.00 EA	RESISTOR 4.7K OHM 1/4W 5% COMP	RCR07G472JS	
R007	A074722	001.00 EA	RESISTOR 4.7K OHM 1/4W 5% COMP	RCR07G472JS	
R008	A074722	001.00 EA	RESISTOR 4.7K OHM 1/4W 5% COMP	RCR07G472JS	

A309242 SUB-ASSY PWB DS3 2-PT MONITOR A309242

Revision C
Effective: November 01, 1991

REF	SA PART	Qty	Description	Mfr Part	CAGE
R009	A074722	001.00 EA	RESISTOR 4.7K OHM 1/4W 5% COMP	RCR07G472JS	
R010	A074722	001.00 EA	RESISTOR 4.7K OHM 1/4W 5% COMP	RCR07G472JS	
R011	A074722	001.00 EA	RESISTOR 4.7K OHM 1/4W 5% COMP	RCR07G472JS	
R012	A074714	001.00 EA	RESISTOR 3.3K OHM 1/4W 5% COMP	CR07G332JS	
R013	A074722	001.00 EA	RESISTOR 4.7K OHM 1/4W 5% COMP	RCR07G472JS	
R014	A083930	001.00 EA	RESISTOR 31.6K OHM RN55C 1% MTL FLM	XZ RN55C 3162F	
R015	A084612	001.00 EA	RESISTOR 4.75K OHM RN55C 1% MTL FLM	XZ RN55C4751F	
R016	A074727	001.00 EA	RESISTOR 10K OHM 1/4W 5% COMP	RCR07G103JS	
R017	A078929	001.00 EA	RESISTOR 1.00K OHM RN55C 1% MTL FLM	XZ RN55C1001F	
R018	A083931	001.00 EA	RESISTOR 33.2K OHM RN55C 1% MTL FLM	XZ RN55C3322F	
R019	A174428	001.00 EA	RESISTOR 19.1K OHM RN55C 1%	XZ RN55C1912F	
R020	A174428	001.00 EA	RESISTOR 19.1K OHM RN55C 1%	XZ RN55C1912F	
R021	A074702	001.00 EA	RESISTOR 1.0K OHM 1/4W 5% COMP	RCR07G102JS	
R022	A074702	001.00 EA	RESISTOR 1.0K OHM 1/4W 5% COMP	RCR07G102JS	
R023	A081061	001.00 EA	RESISTOR 200 OHM 1/4W 5% COMP	RCR07G201JS	
R024	A078929	001.00 EA	RESISTOR 1.00K OHM RN55C 1% MTL FLM	XZ RN55C1001F	
R025	A083930	001.00 EA	RESISTOR 31.6K OHM RN55C 1% MTL FLM	XZ RN55C 3162F	
R026	A074727	001.00 EA	RESISTOR 10K OHM 1/4W 5% COMP	RCR07G103JS	
R027	A083903	001.00 EA	RESISTOR 3.32K OHM RN55C 1% MTL FLM	DP RN55C3321F	
R028	A078700	000.00 EA	FACTORY SELECTED VALUE	PER DISCP.	
R029	A087838	001.00 EA	POT 2K OHM 1/2W CER 3/8 SQ VERT ADJ 25T	3299W-1-202	BOUR
R030	A079712	001.00 EA	RESISTOR 36.5K OHM RN55C 1% MTL FLM	DP RN55C3652F	
R031	A081992	001.00 EA	RESISTOR 22 OHM 1/4W 5% COMP	RCR-07G220-JS	
R032	A078600	000.00 FT	NOT ASSIGNED	FOR ENG ONLY	
R033	A083936	001.00 EA	RESISTOR 48.7K OHM RN55C 1% MTL FLM	XZ RN55C4872F	
R034	A084612	001.00 EA	RESISTOR 4.75K OHM RN55C 1% MTL FLM	XZ RN55C4751F	
R035	A083903	001.00 EA	RESISTOR 3.32K OHM RN55C 1% MTL FLM	DP RN55C3321F	
R036	A078929	001.00 EA	RESISTOR 1.00K OHM RN55C 1% MTL FLM	XZ RN55C1001F	
R037	A074710	001.00 EA	RESISTOR 2.2K OHM 1/4W 5% COMP	RCR07G222JS	
R038	A178264	001.00 EA	RESISTOR 9.09K OHM 1/4W 1% 100PPM MTL FLM	5043ED9K090F	
R039	A178308	001.00 EA	RESISTOR 22.1K OHM 1/4W 1% 100PPM MTL FLM	5043ED22K10F	
R040	A074710	001.00 EA	RESISTOR 2.2K OHM 1/4W 5% COMP	RCR07G222JS	
R041	A082678	001.00 EA	RESISTOR 4.7 OHM 1/4W 5% COMP	RCR07G4R7JS	
R042	A178462	001.00 EA	POT 250K OHM 1/2W CER 3/8 VERT ADJ 25T	3299W-1-254	
R043	A074735	001.00 EA	RESISTOR 22K OHM 1/4W 5% COMP	RCR07G223JS	
R044	A085745	001.00 EA	RESISTOR 68.1 OHM RN55C 1% MTL FLM	RN55C68R1F	
R045	A075551	001.00 EA	RESISTOR 10 OHM 1/4W 5% COMP	RCR07G100JS	
R046	A081992	001.00 EA	RESISTOR 22 OHM 1/4W 5% COMP	RCR-07G220-JS	
R047	A074722	001.00 EA	RESISTOR 4.7K OHM 1/4W 5% COMP	RCR07G472JS	
R048	A083089	001.00 EA	RESISTOR 75.0 OHM RN55C 1% MTL FLM	XZ RN55C75R0F T&R	
R049	A083089	001.00 EA	RESISTOR 75.0 OHM RN55C 1% MTL FLM	XZ RN55C75R0F T&R	
R050	A083855	001.00 EA	RESISTOR 105 OHM RN55C 1% MTL FLM	RN55C1050F	
R051	A083844	001.00 EA	RESISTOR 36.5 OHM RN55D 1% MTL FLM	XZ RN55D 36R5F	
R052	A178313	001.00 EA	RESISTOR 12.1 OHM 1/4W 1% 100PPM MTL FLM	5043ED12R10F	
R053	A083854	001.00 EA	RESISTOR 86.6 OHM RN55C 1% MTL FLM	XZ RN55C86R6F	
R054	A083089	001.00 EA	RESISTOR 75.0 OHM RN55C 1% MTL FLM	XZ RN55C75R0F T&R	
R055	A083089	001.00 EA	RESISTOR 75.0 OHM RN55C 1% MTL FLM	XZ RN55C75R0F T&R	
R056	A083835	001.00 EA	RESISTOR 23.7 OHM RN55D 1% MTL FLM	XZ RN55D 23R7F	
R057	A078915	001.00 EA	RESISTOR 221 OHM RN55C 1% MTL FLM	DP CMF55-70-2210FC/	
R058	A174000	000.00 EA	NOT USED ON THIS ASSEMBLY		
R059	A074722	001.00 EA	RESISTOR 4.7K OHM 1/4W 5% COMP	RCR07G472JS	
R060	A074722	001.00 EA	RESISTOR 4.7K OHM 1/4W 5% COMP	RCR07G472JS	
R061	A174000	000.00 EA	NOT USED ON THIS ASSEMBLY		
R062	A074722	001.00 EA	RESISTOR 4.7K OHM 1/4W 5% COMP	RCR07G472JS	

A309242 SUB-ASSY PWB DS3 2-PT MONITOR A309242

Revision C
Effective: November 01, 1991

REF	SA PART	Qty	Description	Mfr Part	CAGE
R063	A074722	001.00 EA	RESISTOR 4.7K OHM 1/4W 5% COMP	RCR07G472JS	
R064	A074722	001.00 EA	RESISTOR 4.7K OHM 1/4W 5% COMP	RCR07G472JS	
R065	A074722	001.00 EA	RESISTOR 4.7K OHM 1/4W 5% COMP	RCR07G472JS	
R066	A074722	001.00 EA	RESISTOR 4.7K OHM 1/4W 5% COMP	RCR07G472JS	
R067	A074722	001.00 EA	RESISTOR 4.7K OHM 1/4W 5% COMP	RCR07G472JS	
R068	A074714	001.00 EA	RESISTOR 3.3K OHM 1/4W 5% COMP	CR07G332JS	
R069	A074722	001.00 EA	RESISTOR 4.7K OHM 1/4W 5% COMP	RCR07G472JS	
R070	A074727	001.00 EA	RESISTOR 10K OHM 1/4W 5% COMP	RCR07G103JS	
R071	A074722	001.00 EA	RESISTOR 4.7K OHM 1/4W 5% COMP	RCR07G472JS	
R072	A078930	001.00 EA	RESISTOR 2.21K OHM RN55C 1% MTL FLM	DP RN55C2211F	
R073	A083931	001.00 EA	RESISTOR 33.2K OHM RN55C 1% MTL FLM	XZ RN55C3322F	
R074	A084612	001.00 EA	RESISTOR 4.75K OHM RN55C 1% MTL FLM	XZ RN55C4751F	
R075	A078930	001.00 EA	RESISTOR 2.21K OHM RN55C 1% MTL FLM	DP RN55C2211F	
R076	A078930	001.00 EA	RESISTOR 2.21K OHM RN55C 1% MTL FLM	DP RN55C2211F	
R077	A078930	001.00 EA	RESISTOR 2.21K OHM RN55C 1% MTL FLM	DP RN55C2211F	
R078	A074702	001.00 EA	RESISTOR 1.0K OHM 1/4W 5% COMP	RCR07G102JS	
R079	A074702	001.00 EA	RESISTOR 1.0K OHM 1/4W 5% COMP	RCR07G102JS	
R080	A074714	001.00 EA	RESISTOR 3.3K OHM 1/4W 5% COMP	CR07G332JS	
R081	A081061	001.00 EA	RESISTOR 200 OHM 1/4W 5% COMP	RCR07G201JS	
R082	A074727	001.00 EA	RESISTOR 10K OHM 1/4W 5% COMP	RCR07G103JS	
R083	A083903	001.00 EA	RESISTOR 3.32K OHM RN55C 1% MTL FLM	DP RN55C3321F	
R084	A078700	000.00 EA	FACTORY SELECTED VALUE	PER DISCP.	
R085	A087838	001.00 EA	POT 2K OHM 1/2W CER 3/8 SQ VERT ADJ 25T	3299W-1-202	BOUR
R086	A079712	001.00 EA	RESISTOR 36.5K OHM RN55C 1% MTL FLM	DP RN55C3652F	
R087	A081992	001.00 EA	RESISTOR 22 OHM 1/4W 5% COMP	RCR-07G220-JS	
R088	A078600	000.00 FT	NOT ASSIGNED	FOR ENG ONLY	
R089	A083936	001.00 EA	RESISTOR 48.7K OHM RN55C 1% MTL FLM	XZ RN55C4872F	
R090	A084612	001.00 EA	RESISTOR 4.75K OHM RN55C 1% MTL FLM	XZ RN55C4751F	
R091	A083903	001.00 EA	RESISTOR 3.32K OHM RN55C 1% MTL FLM	DP RN55C3321F	
R092	A078929	001.00 EA	RESISTOR 1.00K OHM RN55C 1% MTL FLM	XZ RN55C1001F	
R093	A074710	001.00 EA	RESISTOR 2.2K OHM 1/4W 5% COMP	RCR07G222JS	
R094	A178264	001.00 EA	RESISTOR 9.09K OHM 1/4W 1% 100PPM MTL FLM	5043ED9K090F	
R095	A178308	001.00 EA	RESISTOR 22.1K OHM 1/4W 1% 100PPM MTL FLM	5043ED22K10F	
R096	A074710	001.00 EA	RESISTOR 2.2K OHM 1/4W 5% COMP	RCR07G222JS	
R097	A082678	001.00 EA	RESISTOR 4.7 OHM 1/4W 5% COMP	RCR07G4R7JS	
R098	A178462	001.00 EA	POT 250K OHM 1/2W CER 3/8 VERT ADJ 25T	3299W-1-254	
R099	A074735	001.00 EA	RESISTOR 22K OHM 1/4W 5% COMP	RCR07G223JS	
R100	A085745	001.00 EA	RESISTOR 68.1 OHM RN55C 1% MTL FLM	RN55C68R1F	
R101	A075551	001.00 EA	RESISTOR 10 OHM 1/4W 5% COMP	RCR07G100JS	
R102	A083844	001.00 EA	RESISTOR 36.5 OHM RN55D 1% MTL FLM	XZ RN55D 36R5F	
R103	A081992	001.00 EA	RESISTOR 22 OHM 1/4W 5% COMP	RCR-07G220-JS	
R104	A074722	001.00 EA	RESISTOR 4.7K OHM 1/4W 5% COMP	RCR07G472JS	
R105	A083089	001.00 EA	RESISTOR 75.0 OHM RN55C 1% MTL FLM	XZ RN55C75R0F T&R	
R106	A083089	001.00 EA	RESISTOR 75.0 OHM RN55C 1% MTL FLM	XZ RN55C75R0F T&R	
R107	A083855	001.00 EA	RESISTOR 105 OHM RN55C 1% MTL FLM	RN55C1050F	
R108	A178313	001.00 EA	RESISTOR 12.1 OHM 1/4W 1% 100PPM MTL FLM	5043ED12R10F	
R109	A083854	001.00 EA	RESISTOR 86.6 OHM RN55C 1% MTL FLM	XZ RN55C86R6F	
R110	A083089	001.00 EA	RESISTOR 75.0 OHM RN55C 1% MTL FLM	XZ RN55C75R0F T&R	
R111	A083089	001.00 EA	RESISTOR 75.0 OHM RN55C 1% MTL FLM	XZ RN55C75R0F T&R	
R112	A083835	001.00 EA	RESISTOR 23.7 OHM RN55D 1% MTL FLM	XZ RN55D 23R7F	
R113	A078915	001.00 EA	RESISTOR 221 OHM RN55C 1% MTL FLM	DP CMF55-70-2210FC/	
R114	A174000	000.00 EA	NOT USED ON THIS ASSEMBLY		
R115	A078600	000.00 FT	NOT ASSIGNED	FOR ENG ONLY	
R116	A174000	000.00 EA	NOT USED ON THIS ASSEMBLY		

A309242 SUB-ASSY PWB DS3 2-PT MONITOR A309242

Revision C
Effective: November 01, 1991

REF	SA PART	Qty	Description	Mfr Part	CAGE
R117	A078600	000.00 FT	NOT ASSIGNED	FOR ENG ONLY	
R118	A174000	000.00 EA	NOT USED ON THIS ASSEMBLY		
R119	A174000	000.00 EA	NOT USED ON THIS ASSEMBLY		
R120	A174000	000.00 EA	NOT USED ON THIS ASSEMBLY		
R121	A174000	000.00 EA	NOT USED ON THIS ASSEMBLY		
R122	A174000	000.00 EA	NOT USED ON THIS ASSEMBLY		
R123	A174000	000.00 EA	NOT USED ON THIS ASSEMBLY		
R124	A174000	000.00 EA	NOT USED ON THIS ASSEMBLY		
R125	A174000	000.00 EA	NOT USED ON THIS ASSEMBLY		
R126	A174000	000.00 EA	NOT USED ON THIS ASSEMBLY		
R127	A174000	000.00 EA	NOT USED ON THIS ASSEMBLY		
R128	A174000	000.00 EA	NOT USED ON THIS ASSEMBLY		
R129	A174000	000.00 EA	NOT USED ON THIS ASSEMBLY		
R130	A174000	000.00 EA	NOT USED ON THIS ASSEMBLY		
R131	A174000	000.00 EA	NOT USED ON THIS ASSEMBLY		
R132	A074710	001.00 EA	RESISTOR 2.2K OHM 1/4W 5% COMP	RCR07G222JS	
R133	A074722	001.00 EA	RESISTOR 4.7K OHM 1/4W 5% COMP	RCR07G472JS	
R134	A074722	001.00 EA	RESISTOR 4.7K OHM 1/4W 5% COMP	RCR07G472JS	
R135	A074735	001.00 EA	RESISTOR 22K OHM 1/4W 5% COMP	RCR07G223JS	
R136	A074706	001.00 EA	RESISTOR 1.5K OHM 1/4W 5% COMP	RCR07G152JS	
R137	A174000	000.00 EA	NOT USED ON THIS ASSEMBLY		
R138	A174000	000.00 EA	NOT USED ON THIS ASSEMBLY		
R139	A174000	000.00 EA	NOT USED ON THIS ASSEMBLY		
R140	A077524	001.00 EA	RESISTOR 75 OHM 1/4W 5% COMP	RCR07G750JS	
R141	A174000	000.00 EA	NOT USED ON THIS ASSEMBLY		
R142	A174000	000.00 EA	NOT USED ON THIS ASSEMBLY		
R143	A077524	001.00 EA	RESISTOR 75 OHM 1/4W 5% COMP	RCR07G750JS	
R144	A174000	000.00 EA	NOT USED ON THIS ASSEMBLY		
R145	A077524	001.00 EA	RESISTOR 75 OHM 1/4W 5% COMP	RCR07G750JS	
R146	A174000	000.00 EA	NOT USED ON THIS ASSEMBLY		
TP001	A082909	001.00 EA	TERMINAL PRESS MT DISCONNECT .058 PIN	60599-1	00779
TP002	A082909	001.00 EA	TERMINAL PRESS MT DISCONNECT .058 PIN	60599-1	00779
TP003	A174000	000.00 EA	NOT USED ON THIS ASSEMBLY		
U001	A177252	001.00 EA	IC CMOS CNTR 8-BIT BINARY	TI SN74HC590AN	
U002	A174000	000.00 EA	NOT USED ON THIS ASSEMBLY		
U003	A327878	001.00 EA	IC PATTERN GENERATOR	LSI ASIC #LIA3381-MC	
U004	A457040	001.00 EA	IC FRAMER 2	VLSI PER SA DWG 457	
U005	A327876	001.00 EA	IC CLOCK REC DIGITAL	LSI LIA3382-MC	
U006	A172179	001.00 EA	IC COMPARATOR - VOLTAGE 8L - DIP DUAL	LM393N	
U007	A178460	001.00 EA	IC CMOS INVERTER HEX SOLE SCE	MC 74HC04N	
U008	A327875	001.00 EA	IC DS1/1C/2/3 ANALOG CLOCK REC	NSC ACK REC	
U009	A177252	001.00 EA	IC CMOS CNTR 8-BIT BINARY	TI SN74HC590AN	
U010	A174227	001.00 EA	IC CMOS LATCH 8-BIT ADDRESSABLE	CD74HC259E	
U011	A174000	000.00 EA	NOT USED ON THIS ASSEMBLY		
U012	A327878	001.00 EA	IC PATTERN GENERATOR	LSI ASIC #LIA3381-MC	
U013	A457040	001.00 EA	IC FRAMER 2	VLSI PER SA DWG 457	
U014	A327876	001.00 EA	IC CLOCK REC DIGITAL	LSI LIA3382-MC	
U015	A178460	001.00 EA	IC CMOS INVERTER HEX SOLE SCE	MC 74HC04N	
U016	A086514	001.00 EA	IC OP AMP JFET 8L-DIP 70C COMP DUAL	TL082ACP	
U017	A327875	001.00 EA	IC DS1/1C/2/3 ANALOG CLOCK REC	NSC ACK REC	
U018	A174000	000.00 EA	NOT USED ON THIS ASSEMBLY		
U019	A317164	001.00 EA	TEST POINT .100 CENTER	CMP #TP101-10	
U020	A174000	000.00 EA	NOT USED ON THIS ASSEMBLY		
U021	A174000	000.00 EA	NOT USED ON THIS ASSEMBLY		

A309242 SUB-ASSY PWB DS3 2-PT MONITOR A309242

Revision C
Effective: November 01, 1991

REF	SA PART	Qty	Description	Mfr Part	CAGE
U022	A081658	001.00 EA	IC TTL BUFFER HEX OPEN-COL	SGN SN7407N	
U023	A084000	000.00 EA	VARIES WITH MODEL,SEE HIGHER ASSY FOR PN	PER S A DWG	
U024	A084000	000.00 EA	VARIES WITH MODEL,SEE HIGHER ASSY FOR PN	PER S A DWG	
U025	A084000	000.00 EA	VARIES WITH MODEL,SEE HIGHER ASSY FOR PN	PER S A DWG	
U026	A172455	001.00 EA	IC CMOS GATE AND 2-IN QUAD 14L-DIP	MM74HC08N	
U027	A177003	001.00 EA	IC CMOS TRANSCVR BUS 10-BIT	AM29C861APC	
U028	A177003	001.00 EA	IC CMOS TRANSCVR BUS 10-BIT	AM29C861APC	
U029	A084000	000.00 EA	VARIES WITH MODEL,SEE HIGHER ASSY FOR PN	PER S A DWG	
U030	A178541	001.00 EA	IC CMOS BUFFER/LINE DR 10-BIT	AMD #AM 29C 827APC	
U031	A178541	001.00 EA	IC CMOS BUFFER/LINE DR 10-BIT	AMD #AM 29C 827APC	
U032	A084000	000.00 EA	VARIES WITH MODEL,SEE HIGHER ASSY FOR PN	PER S A DWG	
U033	A084000	000.00 EA	VARIES WITH MODEL,SEE HIGHER ASSY FOR PN	PER S A DWG	
U034	A330210	001.00 EA	IC CMOS FLIP-FLOP TYPE-D	MOS MC74HC374N	
XU001	A086649	001.00 EA	SOCKET 16 PIN DIP PC MT	ICT-163-S-TT	
XU003	A177011	001.00 EA	SOCKET 68 POS PLCC PC MT	PLCC-68-P-T	
XU004	A177011	001.00 EA	SOCKET 68 POS PLCC PC MT	PLCC-68-P-T	
XU005	A177011	001.00 EA	SOCKET 68 POS PLCC PC MT	PLCC-68-P-T	
XU008	A177092	001.00 EA	SOCKET 44 POS PLCC PC MT	PLCC-44-P-T	
XU009	A086649	001.00 EA	SOCKET 16 PIN DIP PC MT	ICT-163-S-TT	
XU012	A177011	001.00 EA	SOCKET 68 POS PLCC PC MT	PLCC-68-P-T	
XU013	A177011	001.00 EA	SOCKET 68 POS PLCC PC MT	PLCC-68-P-T	
XU014	A177011	001.00 EA	SOCKET 68 POS PLCC PC MT	PLCC-68-P-T	
XU017	A177092	001.00 EA	SOCKET 44 POS PLCC PC MT	PLCC-44-P-T	
XU023	A173737	001.00 EA	SOCKET 24 PIN DIP PC MT LOW PROFILE OPEN UL94V	610-24-CC-D	
XU024	A173737	001.00 EA	SOCKET 24 PIN DIP PC MT LOW PROFILE OPEN UL94V	610-24-CC-D	
XU025	A173737	001.00 EA	SOCKET 24 PIN DIP PC MT LOW PROFILE OPEN UL94V	610-24-CC-D	
XU027	A173737	001.00 EA	SOCKET 24 PIN DIP PC MT LOW PROFILE OPEN UL94V	610-24-CC-D	
XU028	A173737	001.00 EA	SOCKET 24 PIN DIP PC MT LOW PROFILE OPEN UL94V	610-24-CC-D	
XU029	A173737	001.00 EA	SOCKET 24 PIN DIP PC MT LOW PROFILE OPEN UL94V	610-24-CC-D	
XU030	A173737	001.00 EA	SOCKET 24 PIN DIP PC MT LOW PROFILE OPEN UL94V	610-24-CC-D	
XU031	A173737	001.00 EA	SOCKET 24 PIN DIP PC MT LOW PROFILE OPEN UL94V	610-24-CC-D	
XU032	A177349	001.00 EA	SOCKET 32-PIN DIP .6W PC MT	ICT-326-S-TG	
XU033	A177349	001.00 EA	SOCKET 32-PIN DIP .6W PC MT	ICT-326-S-TG	
XU034	A086897	001.00 EA	SOCKET 20 PIN DIP PC MT	RBN ICT-203-S-TG	
Z001	A174000	000.00 EA	NOT USED ON THIS ASSEMBLY		
Z002	A174000	000.00 EA	NOT USED ON THIS ASSEMBLY		
001	A306243	001.00 EA	PWB DS3 2X2	PER SA DWG. 306243 A	
002	A078600	000.00 FT	NOT ASSIGNED	FOR ENG ONLY	
004	A082463	001.00 EA	EXTRACTOR PC BOARD	THC 5005-08N	
005	A327997	001.00 EA	LABEL SET 2-POINT MONITOR		

A309243 ASSY PWB DS3 2-PT MOINTOR A309243

Revision C
Effective: June 11, 1991

REF	SA PART	Qty	Description	Mfr Part	CAGE
U023	A309248	001.00 EA	ASSY PAL U23 2-PT MONITOR DS3	PER SA DWG 309248	10110
U024	A309249	001.00 EA	ASSY PAL U24 2-PT MONITOR DS3		
U025	M448989	001.00 EA	PAL ASSEMBLY,U25 2 PT MON DS3	PER SA DWG 448989	42061
U029	A456201	001.00 EA	ASSY PAL U29 2-PT MONITOR DS3	PER SA DWG 456201	10110
001	A309242	001.00 EA	SUB-ASSY PWB DS3 2-PT MONITOR		
002	M448987	001.00 EA	EPROM ASSEMBLY,2 PT MON DS3	PER SA DWG 448987	42061
003	A456977	001.00 EA	BRACKET BOARD LEGEND-2PT DS3	PER SA DWG	
005	A177365	002.00 EA	SPACER NO.4 ID 1/4 OD 3/32L NI	UNICORP S-503-M01-F0	
006	A071494	002.00 EA	NUT 4-40 UNC-2B,PLAIN-HEX,SST	PER MS35649-244	
007	A072321	002.00 EA	SCREW 4-40 X 3/8 F HD,82 DEG,SST	ATY 72321	
008	A073266	002.00 EA	WASHER-NO. 4- .125 .250 .022 AUS SST	PER ANSI B.18.22.1	
009	A073265	002.00 EA	WASHER NO. 4 LOCK EXT TOOTH CAD PLT STL	PER MS35335-29	96906
025	M448989	001.00 EA	PAL ASSEMBLY,U25 2 PT MON DS3	PER SA DWG 448989	42061

A309649 ASSY POWER CORD AT9500 A309649

Revision -
Effective: July 01, 1990

REF	SA PART	Qty	Description	Mfr Part	CAGE
001	A177206	001.00 EA	CORD SERT 3WIRE#18 125V 9FT	BM 17667-YEL-PH390A	
002	A308870	001.00 EA	LABEL DATA POWER CORD	SLB PER #308870	

A327980 SUB-ASSY PWB DS3 2X2 A327980

Revision G
Effective: January 09, 1992

REF	SA PART	Qty	Description	Mfr Part	CAGE
	A309701	000.00 EA	DAS DS3 2X2 BD TEST PROCEDURE		
BB001	A177102	001.00 EA	BUS DISTRBTN 2-LYR VERT MT 36-PIN IN-LINE	RAZ QV-2 17.6.3 (.1)	
BB002	A177102	001.00 EA	BUS DISTRBTN 2-LYR VERT MT 36-PIN IN-LINE	RAZ QV-2 17.6.3 (.1)	
CR001	A071122	001.00 EA	DIODE 1N914 SIL 75V 75MA	1N914	
CR002	A071122	001.00 EA	DIODE 1N914 SIL 75V 75MA	1N914	
CR003	A071122	001.00 EA	DIODE 1N914 SIL 75V 75MA	1N914	
CR004	A071122	001.00 EA	DIODE 1N914 SIL 75V 75MA	1N914	
CR005	A071122	001.00 EA	DIODE 1N914 SIL 75V 75MA	1N914	
CR006	A071122	001.00 EA	DIODE 1N914 SIL 75V 75MA	1N914	
C001	A080139	001.00 EA	CAPACITR .1 MF 50V CER MONO -20%/+80%	RPE122Z5U104Z050V	
C002	A080139	001.00 EA	CAPACITR .1 MF 50V CER MONO -20%/+80%	RPE122Z5U104Z050V	
C003	A081095	001.00 EA	CAPACITR 3.3 MF 50V CER MONO 20%	3C37Z5U335M050B	
C004	A080139	001.00 EA	CAPACITR .1 MF 50V CER MONO -20%/+80%	RPE122Z5U104Z050V	
C005	A080139	001.00 EA	CAPACITR .1 MF 50V CER MONO -20%/+80%	RPE122Z5U104Z050V	
C006	A080139	001.00 EA	CAPACITR .1 MF 50V CER MONO -20%/+80%	RPE122Z5U104Z050V	
C007	A080139	001.00 EA	CAPACITR .1 MF 50V CER MONO -20%/+80%	RPE122Z5U104Z050V	
C008	A080139	001.00 EA	CAPACITR .1 MF 50V CER MONO -20%/+80%	RPE122Z5U104Z050V	
C009	A080139	001.00 EA	CAPACITR .1 MF 50V CER MONO -20%/+80%	RPE122Z5U104Z050V	
C010	A080139	001.00 EA	CAPACITR .1 MF 50V CER MONO -20%/+80%	RPE122Z5U104Z050V	
C011	A070470	001.00 EA	CAPACITR 10 PF 500V SILVER MICA 5%	CD15CD100J03	
C012	A080139	001.00 EA	CAPACITR .1 MF 50V CER MONO -20%/+80%	RPE122Z5U104Z050V	
C013	A070470	001.00 EA	CAPACITR 10 PF 500V SILVER MICA 5%	CD15CD100J03	
C014	A176497	001.00 EA	CAP .01MF 50V CER MON 10% .2LS	RPE122X7R103K50V	
C015	A035656	001.00 EA	CAPACITR 100 MF 20V 10% SOLID TANT POL	T354M107K020AS	
C016	A176497	001.00 EA	CAP .01MF 50V CER MON 10% .2LS	RPE122X7R103K50V	
C017	A070474	001.00 EA	CAPACITR 10 PF 1 KV CER DISC S2L 10%	DD100	
C018	A077965	001.00 EA	CAPACITR 51 PF 500V SILVER MICA 2%	CD6ED510G03	
C019	A080139	001.00 EA	CAPACITR .1 MF 50V CER MONO -20%/+80%	RPE122Z5U104Z050V	
C020	A070474	001.00 EA	CAPACITR 10 PF 1 KV CER DISC S2L 10%	DD100	
C021	A080139	001.00 EA	CAPACITR .1 MF 50V CER MONO -20%/+80%	RPE122Z5U104Z050V	
C022	A080139	001.00 EA	CAPACITR .1 MF 50V CER MONO -20%/+80%	RPE122Z5U104Z050V	
C023	A080139	001.00 EA	CAPACITR .1 MF 50V CER MONO -20%/+80%	RPE122Z5U104Z050V	
C024	A080139	001.00 EA	CAPACITR .1 MF 50V CER MONO -20%/+80%	RPE122Z5U104Z050V	
C025	A035656	001.00 EA	CAPACITR 100 MF 20V 10% SOLID TANT POL	T354M107K020AS	
C026	A077965	001.00 EA	CAPACITR 51 PF 500V SILVER MICA 2%	CD6ED510G03	
C027	A080139	001.00 EA	CAPACITR .1 MF 50V CER MONO -20%/+80%	RPE122Z5U104Z050V	
C028	A080139	001.00 EA	CAPACITR .1 MF 50V CER MONO -20%/+80%	RPE122Z5U104Z050V	
C029	A035656	001.00 EA	CAPACITR 100 MF 20V 10% SOLID TANT POL	T354M107K020AS	
C030	A080139	001.00 EA	CAPACITR .1 MF 50V CER MONO -20%/+80%	RPE122Z5U104Z050V	
C031	A080139	001.00 EA	CAPACITR .1 MF 50V CER MONO -20%/+80%	RPE122Z5U104Z050V	
C032	A080139	001.00 EA	CAPACITR .1 MF 50V CER MONO -20%/+80%	RPE122Z5U104Z050V	
C033	A080139	001.00 EA	CAPACITR .1 MF 50V CER MONO -20%/+80%	RPE122Z5U104Z050V	
C034	A077965	001.00 EA	CAPACITR 51 PF 500V SILVER MICA 2%	CD6ED510G03	
C035	A080139	001.00 EA	CAPACITR .1 MF 50V CER MONO -20%/+80%	RPE122Z5U104Z050V	
C036	A080139	001.00 EA	CAPACITR .1 MF 50V CER MONO -20%/+80%	RPE122Z5U104Z050V	
C037	A081095	001.00 EA	CAPACITR 3.3 MF 50V CER MONO 20%	3C37Z5U335M050B	
C038	A080139	001.00 EA	CAPACITR .1 MF 50V CER MONO -20%/+80%	RPE122Z5U104Z050V	
C039	A081095	001.00 EA	CAPACITR 3.3 MF 50V CER MONO 20%	3C37Z5U335M050B	
C040	A080139	001.00 EA	CAPACITR .1 MF 50V CER MONO -20%/+80%	RPE122Z5U104Z050V	
C041	A080139	001.00 EA	CAPACITR .1 MF 50V CER MONO -20%/+80%	RPE122Z5U104Z050V	
C042	A080139	001.00 EA	CAPACITR .1 MF 50V CER MONO -20%/+80%	RPE122Z5U104Z050V	
C043	A080139	001.00 EA	CAPACITR .1 MF 50V CER MONO -20%/+80%	RPE122Z5U104Z050V	
C044	A070470	001.00 EA	CAPACITR 10 PF 500V SILVER MICA 5%	CD15CD100J03	
C045	A080139	001.00 EA	CAPACITR .1 MF 50V CER MONO -20%/+80%	RPE122Z5U104Z050V	
C046	A070470	001.00 EA	CAPACITR 10 PF 500V SILVER MICA 5%	CD15CD100J03	

A327980 SUB-ASSY PWB DS3 2X2 A327980

Revision G
Effective: January 09, 1992

REF	SA PART	Qty	Description	Mfr Part	CAGE
C047	A176497	001.00 EA	CAP .01MF 50V CER MON 10% .2LS	RPE122X7R103K50V	
C048	A176497	001.00 EA	CAP .01MF 50V CER MON 10% .2LS	RPE122X7R103K50V	
C049	A070474	001.00 EA	CAPACITR 10 PF 1 KV CER DISC S2L 10%	DD100	
C050	A035656	001.00 EA	CAPACITR 100 MF 20V 10% SOLID TANT POL	T354M107K020AS	
C051	A077965	001.00 EA	CAPACITR 51 PF 500V SILVER MICA 2%	CD6ED510G03	
C052	A080139	001.00 EA	CAPACITR .1 MF 50V CER MONO -20%/+80%	RPE122Z5U104Z050V	
C053	A070474	001.00 EA	CAPACITR 10 PF 1 KV CER DISC S2L 10%	DD100	
C054	A080139	001.00 EA	CAPACITR .1 MF 50V CER MONO -20%/+80%	RPE122Z5U104Z050V	
C055	A080139	001.00 EA	CAPACITR .1 MF 50V CER MONO -20%/+80%	RPE122Z5U104Z050V	
C056	A080139	001.00 EA	CAPACITR .1 MF 50V CER MONO -20%/+80%	RPE122Z5U104Z050V	
C057	A080139	001.00 EA	CAPACITR .1 MF 50V CER MONO -20%/+80%	RPE122Z5U104Z050V	
C058	A035656	001.00 EA	CAPACITR 100 MF 20V 10% SOLID TANT POL	T354M107K020AS	
C059	A077965	001.00 EA	CAPACITR 51 PF 500V SILVER MICA 2%	CD6ED510G03	
C060	A080139	001.00 EA	CAPACITR .1 MF 50V CER MONO -20%/+80%	RPE122Z5U104Z050V	
C061	A080139	001.00 EA	CAPACITR .1 MF 50V CER MONO -20%/+80%	RPE122Z5U104Z050V	
C062	A035656	001.00 EA	CAPACITR 100 MF 20V 10% SOLID TANT POL	T354M107K020AS	
C063	A080139	001.00 EA	CAPACITR .1 MF 50V CER MONO -20%/+80%	RPE122Z5U104Z050V	
C064	A080139	001.00 EA	CAPACITR .1 MF 50V CER MONO -20%/+80%	RPE122Z5U104Z050V	
C065	A080139	001.00 EA	CAPACITR .1 MF 50V CER MONO -20%/+80%	RPE122Z5U104Z050V	
C066	A080139	001.00 EA	CAPACITR .1 MF 50V CER MONO -20%/+80%	RPE122Z5U104Z050V	
C067	A077965	001.00 EA	CAPACITR 51 PF 500V SILVER MICA 2%	CD6ED510G03	
C068	A080139	001.00 EA	CAPACITR .1 MF 50V CER MONO -20%/+80%	RPE122Z5U104Z050V	
C069	A080139	001.00 EA	CAPACITR .1 MF 50V CER MONO -20%/+80%	RPE122Z5U104Z050V	
C070	A080139	001.00 EA	CAPACITR .1 MF 50V CER MONO -20%/+80%	RPE122Z5U104Z050V	
C071	A078600	000.00 FT	NOT ASSIGNED	FOR ENG ONLY	
C072	A176497	001.00 EA	CAP .01MF 50V CER MON 10% .2LS	RPE122X7R103K50V	
C073	A176497	001.00 EA	CAP .01MF 50V CER MON 10% .2LS	RPE122X7R103K50V	
C074	A080139	001.00 EA	CAPACITR .1 MF 50V CER MONO -20%/+80%	RPE122Z5U104Z050V	
C075	A083649	001.00 EA	CAPACITR 7-25 PF MIN CER DISC PC MT	538-011-B-7-25	
C076	A080139	001.00 EA	CAPACITR .1 MF 50V CER MONO -20%/+80%	RPE122Z5U104Z050V	
C077	A080139	001.00 EA	CAPACITR .1 MF 50V CER MONO -20%/+80%	RPE122Z5U104Z050V	
C078	A080139	001.00 EA	CAPACITR .1 MF 50V CER MONO -20%/+80%	RPE122Z5U104Z050V	
C079	A080139	001.00 EA	CAPACITR .1 MF 50V CER MONO -20%/+80%	RPE122Z5U104Z050V	
C080	A035656	001.00 EA	CAPACITR 100 MF 20V 10% SOLID TANT POL	T354M107K020AS	
C081	A035656	001.00 EA	CAPACITR 100 MF 20V 10% SOLID TANT POL	T354M107K020AS	
C082	A080139	001.00 EA	CAPACITR .1 MF 50V CER MONO -20%/+80%	RPE122Z5U104Z050V	
C083	A173733	001.00 EA	CAPACITR IC BYPASS FOR .3W 24L-DIP .03MF	30322A	
C084	A173733	001.00 EA	CAPACITR IC BYPASS FOR .3W 24L-DIP .03MF	30322A	
C085	A083258	001.00 EA	CAPACITR CHIP .1 MF 50V	C1812C104M5XAH	
C086	A083258	001.00 EA	CAPACITR CHIP .1 MF 50V	C1812C104M5XAH	
C087	A083258	001.00 EA	CAPACITR CHIP .1 MF 50V	C1812C104M5XAH	
C088	A083258	001.00 EA	CAPACITR CHIP .1 MF 50V	C1812C104M5XAH	
C089	A083258	001.00 EA	CAPACITR CHIP .1 MF 50V	C1812C104M5XAH	
C090	A083258	001.00 EA	CAPACITR CHIP .1 MF 50V	C1812C104M5XAH	
C091	A083258	001.00 EA	CAPACITR CHIP .1 MF 50V	C1812C104M5XAH	
C092	A083258	001.00 EA	CAPACITR CHIP .1 MF 50V	C1812C104M5XAH	
C093	A176497	001.00 EA	CAP .01MF 50V CER MON 10% .2LS	RPE122X7R103K50V	
C094	A176497	001.00 EA	CAP .01MF 50V CER MON 10% .2LS	RPE122X7R103K50V	
C095	A176497	001.00 EA	CAP .01MF 50V CER MON 10% .2LS	RPE122X7R103K50V	
C096	A176497	001.00 EA	CAP .01MF 50V CER MON 10% .2LS	RPE122X7R103K50V	
C097	A080139	001.00 EA	CAPACITR .1 MF 50V CER MONO -20%/+80%	RPE122Z5U104Z050V	
C098	A080139	001.00 EA	CAPACITR .1 MF 50V CER MONO -20%/+80%	RPE122Z5U104Z050V	
C099	A080139	001.00 EA	CAPACITR .1 MF 50V CER MONO -20%/+80%	RPE122Z5U104Z050V	
C100	A080139	001.00 EA	CAPACITR .1 MF 50V CER MONO -20%/+80%	RPE122Z5U104Z050V	

A327980 SUB-ASSY PWB DS3 2X2 A327980

Revision G
Effective: January 09, 1992

REF	SA PART	Qty	Description	Mfr Part	CAGE
C101	A173728	001.00 EA	CAPACITR IC BYPASS FOR .3W 14L-DIP .02MF	203Z14	
C102	A173728	001.00 EA	CAPACITR IC BYPASS FOR .3W 14L-DIP .02MF	203Z14	
DS001	A177211	001.00 EA	LAMP LED-RSTR RED PC MT 5V 3MA	555-2007	
DS002	A177211	001.00 EA	LAMP LED-RSTR RED PC MT 5V 3MA	555-2007	
DS003	A177211	001.00 EA	LAMP LED-RSTR RED PC MT 5V 3MA	555-2007	
DS004	A177211	001.00 EA	LAMP LED-RSTR RED PC MT 5V 3MA	555-2007	
E017	A177971	001.00 EA	CHOKE WIDE-BAND 3B .236X394L	VK20009-3B	
J001	A174000	000.00 EA	NOT USED ON THIS ASSEMBLY		
J002	A178480	001.00 EA	CONN HEADER SGL ROW RT ANG 2-PIN PC MT	TSW-102-11-G-S-RA	
J003	A087366	001.00 EA	CONN HDR SGL ROW STR 3-PIN PC MT OPEN .318 HT	87220-3	00779
J004	A178480	001.00 EA	CONN HEADER SGL ROW RT ANG 2-PIN PC MT	TSW-102-11-G-S-RA	
J005	A174000	000.00 EA	NOT USED ON THIS ASSEMBLY		
J006	A176125	001.00 EA	CONN COAX BNC FEM RT ANG PC MT	UCBJR20	
J007	A176125	001.00 EA	CONN COAX BNC FEM RT ANG PC MT	UCBJR20	
J008	A174000	000.00 EA	NOT USED ON THIS ASSEMBLY		
J009	A178480	001.00 EA	CONN HEADER SGL ROW RT ANG 2-PIN PC MT	TSW-102-11-G-S-RA	
J010	A087366	001.00 EA	CONN HDR SGL ROW STR 3-PIN PC MT OPEN .318 HT	87220-3	00779
J011	A178480	001.00 EA	CONN HEADER SGL ROW RT ANG 2-PIN PC MT	TSW-102-11-G-S-RA	
J012	A174000	000.00 EA	NOT USED ON THIS ASSEMBLY		
J013	A178480	001.00 EA	CONN HEADER SGL ROW RT ANG 2-PIN PC MT	TSW-102-11-G-S-RA	
J014	A176125	001.00 EA	CONN COAX BNC FEM RT ANG PC MT	UCBJR20	
J015	A176125	001.00 EA	CONN COAX BNC FEM RT ANG PC MT	UCBJR20	
J016	A176125	001.00 EA	CONN COAX BNC FEM RT ANG PC MT	UCBJR20	
J017	A178480	001.00 EA	CONN HEADER SGL ROW RT ANG 2-PIN PC MT	TSW-102-11-G-S-RA	
J018	A078600	000.00 FT	NOT ASSIGNED	FOR ENG ONLY	
J019	A078600	000.00 FT	NOT ASSIGNED	FOR ENG ONLY	
J020	A173712	001.00 EA	CONN RECT 96-COND MALE PNL MT RT ANG PC MT	532505-1	00779
J021	A173712	001.00 EA	CONN RECT 96-COND MALE PNL MT RT ANG PC MT	532505-1	00779
K001	A177023	001.00 EA	RELAY 5VDC DPDT DIP SEALED	DF2E-DC5V	
K002	A177023	001.00 EA	RELAY 5VDC DPDT DIP SEALED	DF2E-DC5V	
L001	A079167	001.00 EA	INDUCTOR .33 UH SUBMIN UNSHLD 10%	IR-2 .33UH	
L002	A078716	001.00 EA	INDUCTOR 100 UH SUBMIN UNSHLD 10%	IR-2 100UH	
L003	A078716	001.00 EA	INDUCTOR 100 UH SUBMIN UNSHLD 10%	IR-2 100UH	
L004	A077944	001.00 EA	INDUCTOR .27 UH SUBMIN UNSHLD 10%	IR-2 .27UH	
L005	A079167	001.00 EA	INDUCTOR .33 UH SUBMIN UNSHLD 10%	IR-2 .33UH	
L006	A078716	001.00 EA	INDUCTOR 100 UH SUBMIN UNSHLD 10%	IR-2 100UH	
L007	A078716	001.00 EA	INDUCTOR 100 UH SUBMIN UNSHLD 10%	IR-2 100UH	
L008	A077944	001.00 EA	INDUCTOR .27 UH SUBMIN UNSHLD 10%	IR-2 .27UH	
L009	A078600	000.00 FT	NOT ASSIGNED	FOR ENG ONLY	
P001	A086884	001.00 EA	JUMPER FEMALE INSULATED .10 SPACING	65474-004	
P002	A086884	001.00 EA	JUMPER FEMALE INSULATED .10 SPACING	65474-004	
Q001	A079660	001.00 EA	TRANSSTR 2N4093 FET N-CHNL JUNC	2N4093	
Q002	A174224	001.00 EA	TRANSSTR MRF-571 NPN SIL	MRF-571	
Q003	A083032	001.00 EA	TRANSSTR 2N2222A NPN SIL	FSC 2N2222A	
Q004	A079660	001.00 EA	TRANSSTR 2N4093 FET N-CHNL JUNC	2N4093	
Q005	A174224	001.00 EA	TRANSSTR MRF-571 NPN SIL	MRF-571	
Q006	A083032	001.00 EA	TRANSSTR 2N2222A NPN SIL	FSC 2N2222A	
Q007	A083032	001.00 EA	TRANSSTR 2N2222A NPN SIL	FSC 2N2222A	
R001	A074722	001.00 EA	RESISTOR 4.7K OHM 1/4W 5% COMP	RCR07G472JS	
R002	A074722	001.00 EA	RESISTOR 4.7K OHM 1/4W 5% COMP	RCR07G472JS	
R003	A074722	001.00 EA	RESISTOR 4.7K OHM 1/4W 5% COMP	RCR07G472JS	
R004	A074722	001.00 EA	RESISTOR 4.7K OHM 1/4W 5% COMP	RCR07G472JS	
R005	A074722	001.00 EA	RESISTOR 4.7K OHM 1/4W 5% COMP	RCR07G472JS	
R006	A074722	001.00 EA	RESISTOR 4.7K OHM 1/4W 5% COMP	RCR07G472JS	

A327980 SUB-ASSY PWB DS3 2X2 A327980

Revision G
Effective: January 09, 1992

REF	SA PART	Qty	Description	Mfr Part	CAGE
R007	A074722	001.00 EA	RESISTOR 4.7K OHM 1/4W 5% COMP	RCR07G472JS	
R008	A074722	001.00 EA	RESISTOR 4.7K OHM 1/4W 5% COMP	RCR07G472JS	
R009	A074722	001.00 EA	RESISTOR 4.7K OHM 1/4W 5% COMP	RCR07G472JS	
R010	A074722	001.00 EA	RESISTOR 4.7K OHM 1/4W 5% COMP	RCR07G472JS	
R011	A074722	001.00 EA	RESISTOR 4.7K OHM 1/4W 5% COMP	RCR07G472JS	
R012	A074714	001.00 EA	RESISTOR 3.3K OHM 1/4W 5% COMP	CR07G332JS	
R013	A074722	001.00 EA	RESISTOR 4.7K OHM 1/4W 5% COMP	RCR07G472JS	
R014	A083930	001.00 EA	RESISTOR 31.6K OHM RN55C 1% MTL FLM	XZ RN55C 3162F	
R015	A084612	001.00 EA	RESISTOR 4.75K OHM RN55C 1% MTL FLM	XZ RN55C4751F	
R016	A074727	001.00 EA	RESISTOR 10K OHM 1/4W 5% COMP	RCR07G103JS	
R017	A078929	001.00 EA	RESISTOR 1.00K OHM RN55C 1% MTL FLM	XZ RN55C1001F	
R018	A083931	001.00 EA	RESISTOR 33.2K OHM RN55C 1% MTL FLM	XZ RN55C3322F	
R019	A174428	001.00 EA	RESISTOR 19.1K OHM RN55C 1%	XZ RN55C1912F	
R020	A174428	001.00 EA	RESISTOR 19.1K OHM RN55C 1%	XZ RN55C1912F	
R021	A074702	001.00 EA	RESISTOR 1.0K OHM 1/4W 5% COMP	RCR07G102JS	
R022	A074702	001.00 EA	RESISTOR 1.0K OHM 1/4W 5% COMP	RCR07G102JS	
R023	A081061	001.00 EA	RESISTOR 200 OHM 1/4W 5% COMP	RCR07G201JS	
R024	A078929	001.00 EA	RESISTOR 1.00K OHM RN55C 1% MTL FLM	XZ RN55C1001F	
R025	A083930	001.00 EA	RESISTOR 31.6K OHM RN55C 1% MTL FLM	XZ RN55C 3162F	
R026	A074727	001.00 EA	RESISTOR 10K OHM 1/4W 5% COMP	RCR07G103JS	
R027	A083903	001.00 EA	RESISTOR 3.32K OHM RN55C 1% MTL FLM	DP RN55C3321F	
R028	A078700	000.00 EA	FACTORY SELECTED VALUE	PER DISCP.	
R029	A087838	001.00 EA	POT 2K OHM 1/2W CER 3/8 SQ VERT ADJ 25T	3299W-1-202	BOUR
R030	A079712	001.00 EA	RESISTOR 36.5K OHM RN55C 1% MTL FLM	DP RN55C3652F	
R031	A081992	001.00 EA	RESISTOR 22 OHM 1/4W 5% COMP	RCR-07G220-JS	
R032	A078600	000.00 FT	NOT ASSIGNED	FOR ENG ONLY	
R033	A083936	001.00 EA	RESISTOR 48.7K OHM RN55C 1% MTL FLM	XZ RN55C4872F	
R034	A084612	001.00 EA	RESISTOR 4.75K OHM RN55C 1% MTL FLM	XZ RN55C4751F	
R035	A083903	001.00 EA	RESISTOR 3.32K OHM RN55C 1% MTL FLM	DP RN55C3321F	
R036	A078929	001.00 EA	RESISTOR 1.00K OHM RN55C 1% MTL FLM	XZ RN55C1001F	
R037	A074710	001.00 EA	RESISTOR 2.2K OHM 1/4W 5% COMP	RCR07G222JS	
R038	A178264	001.00 EA	RESISTOR 9.09K OHM 1/4W 1% 100PPM MTL FLM	5043ED9K090F	
R039	A178308	001.00 EA	RESISTOR 22.1K OHM 1/4W 1% 100PPM MTL FLM	5043ED22K10F	
R040	A074710	001.00 EA	RESISTOR 2.2K OHM 1/4W 5% COMP	RCR07G222JS	
R041	A082678	001.00 EA	RESISTOR 4.7 OHM 1/4W 5% COMP	RCR07G4R7JS	
R042	A178462	001.00 EA	POT 250K OHM 1/2W CER 3/8 VERT ADJ 25T	3299W-1-254	
R043	A074735	001.00 EA	RESISTOR 22K OHM 1/4W 5% COMP	RCR07G223JS	
R044	A085745	001.00 EA	RESISTOR 68.1 OHM RN55C 1% MTL FLM	RN55C68R1F	
R045	A075551	001.00 EA	RESISTOR 10 OHM 1/4W 5% COMP	RCR07G100JS	
R046	A081992	001.00 EA	RESISTOR 22 OHM 1/4W 5% COMP	RCR-07G220-JS	
R047	A074722	001.00 EA	RESISTOR 4.7K OHM 1/4W 5% COMP	RCR07G472JS	
R048	A083089	001.00 EA	RESISTOR 75.0 OHM RN55C 1% MTL FLM	XZ RN55C75R0F T&R	
R049	A083089	001.00 EA	RESISTOR 75.0 OHM RN55C 1% MTL FLM	XZ RN55C75R0F T&R	
R050	A083855	001.00 EA	RESISTOR 105 OHM RN55C 1% MTL FLM	RN55C1050F	
R051	A083844	001.00 EA	RESISTOR 36.5 OHM RN55D 1% MTL FLM	XZ RN55D 36R5F	
R052	A178313	001.00 EA	RESISTOR 12.1 OHM 1/4W 1% 100PPM MTL FLM	5043ED12R10F	
R053	A083854	001.00 EA	RESISTOR 86.6 OHM RN55C 1% MTL FLM	XZ RN55C86R6F	
R054	A083089	001.00 EA	RESISTOR 75.0 OHM RN55C 1% MTL FLM	XZ RN55C75R0F T&R	
R055	A083089	001.00 EA	RESISTOR 75.0 OHM RN55C 1% MTL FLM	XZ RN55C75R0F T&R	
R056	A083835	001.00 EA	RESISTOR 23.7 OHM RN55D 1% MTL FLM	XZ RN55D 23R7F	
R057	A078915	001.00 EA	RESISTOR 221 OHM RN55C 1% MTL FLM	DP CMF55-70-2210FC/	
R058	A074722	001.00 EA	RESISTOR 4.7K OHM 1/4W 5% COMP	RCR07G472JS	
R059	A074722	001.00 EA	RESISTOR 4.7K OHM 1/4W 5% COMP	RCR07G472JS	
R060	A074722	001.00 EA	RESISTOR 4.7K OHM 1/4W 5% COMP	RCR07G472JS	

A327980 SUB-ASSY PWB DS3 2X2 A327980

Revision G
Effective: January 09, 1992

REF	SA PART	Qty	Description	Mfr Part	CAGE
R061	A074722	001.00 EA	RESISTOR 4.7K OHM 1/4W 5% COMP	RCR07G472JS	
R062	A074722	001.00 EA	RESISTOR 4.7K OHM 1/4W 5% COMP	RCR07G472JS	
R063	A074722	001.00 EA	RESISTOR 4.7K OHM 1/4W 5% COMP	RCR07G472JS	
R064	A074722	001.00 EA	RESISTOR 4.7K OHM 1/4W 5% COMP	RCR07G472JS	
R065	A074722	001.00 EA	RESISTOR 4.7K OHM 1/4W 5% COMP	RCR07G472JS	
R066	A074722	001.00 EA	RESISTOR 4.7K OHM 1/4W 5% COMP	RCR07G472JS	
R067	A074722	001.00 EA	RESISTOR 4.7K OHM 1/4W 5% COMP	RCR07G472JS	
R068	A074714	001.00 EA	RESISTOR 3.3K OHM 1/4W 5% COMP	CR07G332JS	
R069	A074722	001.00 EA	RESISTOR 4.7K OHM 1/4W 5% COMP	RCR07G472JS	
R070	A074727	001.00 EA	RESISTOR 10K OHM 1/4W 5% COMP	RCR07G103JS	
R071	A074722	001.00 EA	RESISTOR 4.7K OHM 1/4W 5% COMP	RCR07G472JS	
R072	A078930	001.00 EA	RESISTOR 2.21K OHM RN55C 1% MTL FLM	DP RN55C2211F	
R073	A083931	001.00 EA	RESISTOR 33.2K OHM RN55C 1% MTL FLM	XZ RN55C3322F	
R074	A084612	001.00 EA	RESISTOR 4.75K OHM RN55C 1% MTL FLM	XZ RN55C4751F	
R075	A078930	001.00 EA	RESISTOR 2.21K OHM RN55C 1% MTL FLM	DP RN55C2211F	
R076	A078930	001.00 EA	RESISTOR 2.21K OHM RN55C 1% MTL FLM	DP RN55C2211F	
R077	A078930	001.00 EA	RESISTOR 2.21K OHM RN55C 1% MTL FLM	DP RN55C2211F	
R078	A074702	001.00 EA	RESISTOR 1.0K OHM 1/4W 5% COMP	RCR07G102JS	
R079	A074702	001.00 EA	RESISTOR 1.0K OHM 1/4W 5% COMP	RCR07G102JS	
R080	A074714	001.00 EA	RESISTOR 3.3K OHM 1/4W 5% COMP	CR07G332JS	
R081	A081061	001.00 EA	RESISTOR 200 OHM 1/4W 5% COMP	RCR07G201JS	
R082	A074727	001.00 EA	RESISTOR 10K OHM 1/4W 5% COMP	RCR07G103JS	
R083	A083903	001.00 EA	RESISTOR 3.32K OHM RN55C 1% MTL FLM	DP RN55C3321F	
R084	A078700	000.00 EA	FACTORY SELECTED VALUE	PER DISCP.	
R085	A087838	001.00 EA	POT 2K OHM 1/2W CER 3/8 SQ VERT ADJ 25T	3299W-1-202	BOURN
R086	A079712	001.00 EA	RESISTOR 36.5K OHM RN55C 1% MTL FLM	DP RN55C3652F	
R087	A081992	001.00 EA	RESISTOR 22 OHM 1/4W 5% COMP	RCR-07G220-JS	
R088	A078600	000.00 FT	NOT ASSIGNED	FOR ENG ONLY	
R089	A083936	001.00 EA	RESISTOR 48.7K OHM RN55C 1% MTL FLM	XZ RN55C4872F	
R090	A084612	001.00 EA	RESISTOR 4.75K OHM RN55C 1% MTL FLM	XZ RN55C4751F	
R091	A083903	001.00 EA	RESISTOR 3.32K OHM RN55C 1% MTL FLM	DP RN55C3321F	
R092	A078929	001.00 EA	RESISTOR 1.00K OHM RN55C 1% MTL FLM	XZ RN55C1001F	
R093	A074710	001.00 EA	RESISTOR 2.2K OHM 1/4W 5% COMP	RCR07G222JS	
R094	A178264	001.00 EA	RESISTOR 9.09K OHM 1/4W 1% 100PPM MTL FLM	5043ED9K090F	
R095	A178308	001.00 EA	RESISTOR 22.1K OHM 1/4W 1% 100PPM MTL FLM	5043ED22K10F	
R096	A074710	001.00 EA	RESISTOR 2.2K OHM 1/4W 5% COMP	RCR07G222JS	
R097	A082678	001.00 EA	RESISTOR 4.7 OHM 1/4W 5% COMP	RCR07G4R7JS	
R098	A178462	001.00 EA	POT 250K OHM 1/2W CER 3/8 VERT ADJ 25T	3299W-1-254	
R099	A074735	001.00 EA	RESISTOR 22K OHM 1/4W 5% COMP	RCR07G223JS	
R100	A085745	001.00 EA	RESISTOR 68.1 OHM RN55C 1% MTL FLM	RN55C68R1F	
R101	A075551	001.00 EA	RESISTOR 10 OHM 1/4W 5% COMP	RCR07G100JS	
R102	A083844	001.00 EA	RESISTOR 36.5 OHM RN55D 1% MTL FLM	XZ RN55D 36R5F	
R103	A081992	001.00 EA	RESISTOR 22 OHM 1/4W 5% COMP	RCR-07G220-JS	
R104	A074722	001.00 EA	RESISTOR 4.7K OHM 1/4W 5% COMP	RCR07G472JS	
R105	A083089	001.00 EA	RESISTOR 75.0 OHM RN55C 1% MTL FLM	XZ RN55C75R0F T&R	
R106	A083089	001.00 EA	RESISTOR 75.0 OHM RN55C 1% MTL FLM	XZ RN55C75R0F T&R	
R107	A083855	001.00 EA	RESISTOR 105 OHM RN55C 1% MTL FLM	RN55C1050F	
R108	A178313	001.00 EA	RESISTOR 12.1 OHM 1/4W 1% 100PPM MTL FLM	5043ED12R10F	
R109	A083854	001.00 EA	RESISTOR 86.6 OHM RN55C 1% MTL FLM	XZ RN55C86R6F	
R110	A083089	001.00 EA	RESISTOR 75.0 OHM RN55C 1% MTL FLM	XZ RN55C75R0F T&R	
R111	A083089	001.00 EA	RESISTOR 75.0 OHM RN55C 1% MTL FLM	XZ RN55C75R0F T&R	
R112	A083835	001.00 EA	RESISTOR 23.7 OHM RN55D 1% MTL FLM	XZ RN55D 23R7F	
R113	A078915	001.00 EA	RESISTOR 221 OHM RN55C 1% MTL FLM	DP CMF55-70-2210FC/	
R114	A078600	000.00 FT	NOT ASSIGNED	FOR ENG ONLY	

A327980 SUB-ASSY PWB DS3 2X2 A327980

Revision G
Effective: January 09, 1992

REF	SA PART	Qty	Description	Mfr Part	CAGE
R115	A078600	000.00 FT	NOT ASSIGNED	FOR ENG ONLY	
R116	A078600	000.00 FT	NOT ASSIGNED	FOR ENG ONLY	
R117	A078600	000.00 FT	NOT ASSIGNED	FOR ENG ONLY	
R118	A078600	000.00 FT	NOT ASSIGNED	FOR ENG ONLY	
R119	A078600	000.00 FT	NOT ASSIGNED	FOR ENG ONLY	
R120	A074679	001.00 EA	RESISTOR 150 OHM 1/4W 5% COMP	RCR07G151JS	
R121	A078600	000.00 FT	NOT ASSIGNED	FOR ENG ONLY	
R122	A074714	001.00 EA	RESISTOR 3.3K OHM 1/4W 5% COMP	CR07G332JS	
R123	A083089	001.00 EA	RESISTOR 75.0 OHM RN55C 1% MTL FLM	XZ RN55C75R0F T&R	
R124	A087839	001.00 EA	POT 5K OHM 1/2 CER 3/8 SQ VERT ADJ 25T	3299W-1-502	
R125	A074733	001.00 EA	RESISTOR 18K OHM 1/4W 5% COMP	CR07G183JS	
R126	A078600	000.00 FT	NOT ASSIGNED	FOR ENG ONLY	
R127	A087839	001.00 EA	POT 5K OHM 1/2 CER 3/8 SQ VERT ADJ 25T	3299W-1-502	
R128	A074679	001.00 EA	RESISTOR 150 OHM 1/4W 5% COMP	RCR07G151JS	
R129	A074733	001.00 EA	RESISTOR 18K OHM 1/4W 5% COMP	CR07G183JS	
R130	A074714	001.00 EA	RESISTOR 3.3K OHM 1/4W 5% COMP	CR07G332JS	
R131	A075551	001.00 EA	RESISTOR 10 OHM 1/4W 5% COMP	RCR07G100JS	
R132	A074710	001.00 EA	RESISTOR 2.2K OHM 1/4W 5% COMP	RCR07G222JS	
R133	A074722	001.00 EA	RESISTOR 4.7K OHM 1/4W 5% COMP	RCR07G472JS	
R134	A074722	001.00 EA	RESISTOR 4.7K OHM 1/4W 5% COMP	RCR07G472JS	
R135	A074735	001.00 EA	RESISTOR 22K OHM 1/4W 5% COMP	RCR07G223JS	
R136	A074706	001.00 EA	RESISTOR 1.5K OHM 1/4W 5% COMP	RCR07G152JS	
R137	A074722	001.00 EA	RESISTOR 4.7K OHM 1/4W 5% COMP	RCR07G472JS	
R138	A074722	001.00 EA	RESISTOR 4.7K OHM 1/4W 5% COMP	RCR07G472JS	
R139	A074722	001.00 EA	RESISTOR 4.7K OHM 1/4W 5% COMP	RCR07G472JS	
R140	A077524	001.00 EA	RESISTOR 75 OHM 1/4W 5% COMP	RCR07G750JS	
R141	A077524	001.00 EA	RESISTOR 75 OHM 1/4W 5% COMP	RCR07G750JS	
R142	A077524	001.00 EA	RESISTOR 75 OHM 1/4W 5% COMP	RCR07G750JS	
R143	A077524	001.00 EA	RESISTOR 75 OHM 1/4W 5% COMP	RCR07G750JS	
R144	A071917	001.00 EA	RESISTOR 330 OHM 1/4W 5% COMP	RCR07G331JS	
R145	A077524	001.00 EA	RESISTOR 75 OHM 1/4W 5% COMP	RCR07G750JS	
R146	A071917	001.00 EA	RESISTOR 330 OHM 1/4W 5% COMP	RCR07G331JS	
TP001	A082909	001.00 EA	TERMINAL PRESS MT DISCONNECT .058 PIN	60599-1	00779
TP002	A082909	001.00 EA	TERMINAL PRESS MT DISCONNECT .058 PIN	60599-1	00779
TP003	A082909	001.00 EA	TERMINAL PRESS MT DISCONNECT .058 PIN	60599-1	00779
U001	A177252	001.00 EA	IC CMOS CNTR 8-BIT BINARY	TI SN74HC590AN	
U002	A327877	001.00 EA	IC FRAMER	LSI ASIC #LIA 3324-M	
U003	A327878	001.00 EA	IC PATTERN GENERATOR	LSI ASIC #LIA3381-MC	
U004	A457040	001.00 EA	IC FRAMER 2	VLSI PER SA DWG 457	
U005	A327876	001.00 EA	IC CLOCK REC DIGITAL	LSI LIA3382-MC	
U006	A172179	001.00 EA	IC COMPARATOR - VOLTAGE 8L - DIP DUAL	LM393N	
U007	A178460	001.00 EA	IC CMOS INVERTER HEX SOLE SCE	MC 74HC04N	
U008	A327875	001.00 EA	IC DS1/1C/2/3 ANALOG CLOCK REC	NSC ACK REC	
U009	A177252	001.00 EA	IC CMOS CNTR 8-BIT BINARY	TI SN74HC590AN	
U010	A174227	001.00 EA	IC CMOS LATCH 8-BIT ADDRESSABLE	CD74HC259E	
U011	A327877	001.00 EA	IC FRAMER	LSI ASIC #LIA 3324-M	
U012	A327878	001.00 EA	IC PATTERN GENERATOR	LSI ASIC #LIA3381-MC	
U013	A457040	001.00 EA	IC FRAMER 2	VLSI PER SA DWG 457	
U014	A327876	001.00 EA	IC CLOCK REC DIGITAL	LSI LIA3382-MC	
U015	A178460	001.00 EA	IC CMOS INVERTER HEX SOLE SCE	MC 74HC04N	
U016	A086514	001.00 EA	IC OP AMP JFET 8L-DIP 70C COMP DUAL	TL082ACP	
U017	A327875	001.00 EA	IC DS1/1C/2/3 ANALOG CLOCK REC	NSC ACK REC	
U018	A177395	001.00 EA	IC CMOS MUX DUAL 4LINE TO 1 3S	TI 74AC 11253N	
U019	A177395	001.00 EA	IC CMOS MUX DUAL 4LINE TO 1 3S	TI 74AC 11253N	

A327980 SUB-ASSY PWB DS3 2X2 A327980

Revision G
Effective: January 09, 1992

REF	SA PART	Qty	Description	Mfr Part	CAGE
U020	A173221	001.00 EA	IC CMOS GATE NAND 2-IN QUAD	NSC MM74HC00N	
U021	A304112	001.00 EA	OSCILLATOR CLOCK 44736 MGH	PER SA DESC	
U022	A081658	001.00 EA	IC TTL BUFFER HEX OPEN-COL	SGN SN7407N	
U023	A084000	000.00 EA	VARIES WITH MODEL,SEE HIGHER ASSY FOR PN	PER S A DWG	
U024	A084000	000.00 EA	VARIES WITH MODEL,SEE HIGHER ASSY FOR PN	PER S A DWG	
U025	A084000	000.00 EA	VARIES WITH MODEL,SEE HIGHER ASSY FOR PN	PER S A DWG	
U026	A172455	001.00 EA	IC CMOS GATE AND 2-IN QUAD 14L-DIP	MM74HC08N	
U027	A177003	001.00 EA	IC CMOS TRANSCVR BUS 10-BIT	AM29C861APC	
U028	A177003	001.00 EA	IC CMOS TRANSCVR BUS 10-BIT	AM29C861APC	
U029	A084000	000.00 EA	VARIES WITH MODEL,SEE HIGHER ASSY FOR PN	PER S A DWG	
U030	A178541	001.00 EA	IC CMOS BUFFER/LINE DR 10-BIT	AMD #AM 29C 827APC	
U031	A178541	001.00 EA	IC CMOS BUFFER/LINE DR 10-BIT	AMD #AM 29C 827APC	
U032	A084000	000.00 EA	VARIES WITH MODEL,SEE HIGHER ASSY FOR PN	PER S A DWG	
U033	A084000	000.00 EA	VARIES WITH MODEL,SEE HIGHER ASSY FOR PN	PER S A DWG	
U034	A330210	001.00 EA	IC CMOS FLIP-FLOP TYPE-D	MOS MC74HC374N	
W001	A306222	001.00 EA	CABLE 5.5 IN CHABIN	PER SA DWG 306222	
W002	A306222	001.00 EA	CABLE 5.5 IN CHABIN	PER SA DWG 306222	
W003	A306221	001.00 EA	CABLE 10 IN. CHABIN	PER SA DWG 306221	
XU001	A086649	001.00 EA	SOCKET 16 PIN DIP PC MT	ICT-163-S-TT	
XU002	A177011	001.00 EA	SOCKET 68 POS PLCC PC MT	PLCC-68-P-T	
XU003	A177011	001.00 EA	SOCKET 68 POS PLCC PC MT	PLCC-68-P-T	
XU004	A177011	001.00 EA	SOCKET 68 POS PLCC PC MT	PLCC-68-P-T	
XU005	A177011	001.00 EA	SOCKET 68 POS PLCC PC MT	PLCC-68-P-T	
XU008	A177092	001.00 EA	SOCKET 44 POS PLCC PC MT	PLCC-44-P-T	
XU009	A086649	001.00 EA	SOCKET 16 PIN DIP PC MT	ICT-163-S-TT	
XU011	A177011	001.00 EA	SOCKET 68 POS PLCC PC MT	PLCC-68-P-T	
XU012	A177011	001.00 EA	SOCKET 68 POS PLCC PC MT	PLCC-68-P-T	
XU013	A177011	001.00 EA	SOCKET 68 POS PLCC PC MT	PLCC-68-P-T	
XU014	A177011	001.00 EA	SOCKET 68 POS PLCC PC MT	PLCC-68-P-T	
XU017	A177092	001.00 EA	SOCKET 44 POS PLCC PC MT	PLCC-44-P-T	
XU023	A173737	001.00 EA	SOCKET 24 PIN DIP PC MT LOW PROFILE OPEN UL94V	610-24-CC-D	
XU024	A173737	001.00 EA	SOCKET 24 PIN DIP PC MT LOW PROFILE OPEN UL94V	610-24-CC-D	
XU025	A173737	001.00 EA	SOCKET 24 PIN DIP PC MT LOW PROFILE OPEN UL94V	610-24-CC-D	
XU027	A173737	001.00 EA	SOCKET 24 PIN DIP PC MT LOW PROFILE OPEN UL94V	610-24-CC-D	
XU028	A173737	001.00 EA	SOCKET 24 PIN DIP PC MT LOW PROFILE OPEN UL94V	610-24-CC-D	
XU029	A173737	001.00 EA	SOCKET 24 PIN DIP PC MT LOW PROFILE OPEN UL94V	610-24-CC-D	
XU030	A173737	001.00 EA	SOCKET 24 PIN DIP PC MT LOW PROFILE OPEN UL94V	610-24-CC-D	
XU031	A173737	001.00 EA	SOCKET 24 PIN DIP PC MT LOW PROFILE OPEN UL94V	610-24-CC-D	
XU032	A177349	001.00 EA	SOCKET 32-PIN DIP .6W PC MT	ICT-326-S-TG	
XU033	A177349	001.00 EA	SOCKET 32-PIN DIP .6W PC MT	ICT-326-S-TG	
XU034	A086897	001.00 EA	SOCKET 20 PIN DIP PC MT	RBN ICT-203-S-TG	
Z001	A327940	001.00 EA	HYBRID 75 OHM DSX - 3	PER SA DWG.	
Z002	A327940	001.00 EA	HYBRID 75 OHM DSX - 3	PER SA DWG.	
000	A327978	000.00 EA	SCHEMATIC DS3 2X2		
001	A306243	001.00 EA	PWB DS3 2X2	PER SA DWG. 306243 A	
002	A317056	001.00 EA	DUAL IN-LINE PAD	814-045	
004	A082463	001.00 EA	EXTRACTOR PC BOARD	THC 5005-08N	
005	A178482	006.00 EA	SPACER .32ID.28500 .3L NYLON	BIVAR 938-300	

A328077 ASSY PWB DEMUX DAS

Revision T
Effective: June 13, 1991

REF	SA PART	Qty	Description	Mfr Part	CAGE
	A447745	000.00 EA	DEMUX BOARD LEVEL TEST PROCEDR		
J005	A176125	001.00 EA	CONN COAX BNC FEM RT ANG PC MT	UCBJR20	
J006	A307232	001.00 EA	JACK PHONE 3-COND T-R AU RTANG	PER SA DWG.	
J008	A176125	001.00 EA	CONN COAX BNC FEM RT ANG PC MT	UCBJR20	
J009	A307232	001.00 EA	JACK PHONE 3-COND T-R AU RTANG	PER SA DWG.	
J011	A176259	001.00 EA	CONN RECT 9-COND FEM RT ANG PC MT	H2R09RA29CP	
J012	A307232	001.00 EA	JACK PHONE 3-COND T-R AU RTANG	PER SA DWG.	
U001	A307959	001.00 EA	ASSY PAL PROGRAM U1 DEMUX		
U010	A458325	001.00 EA	ASSY PAL PROGRAM U10 DEMUX		
U028	A307951	001.00 EA	ASSY PAL PROGRAM U28 DEMUX	PER SA DWG 307951	10110
U029	A461091	001.00 EA	ASSY PAL PROGRAM U29 DEMUX	PER SA DWG 461091	10110
U036	A457001	001.00 EA	ASSY PAL PROGRAM U36 DEMUX	PER SA DWG 457001	10110
U038	A307957	001.00 EA	ASSY PAL PROGRAM U38 DEMUX	PER SA DWG 307957	10110
U040	A307963	001.00 EA	ASSY PAL PROGRAM U40 DEMUX		
001	A307223	001.00 EA	SUB-ASSY PWB DS3-DS1/DSO DEMUX		
002	M449214	001.00 EA	EPROM ASSEMBLY, DEMUX DAS 9000	PER SA DWG 449214	42061
003	A309109	001.00 EA	BRACKET BOARD LEGEND-DMUX	PER SA DWG.	
005	A177365	002.00 EA	SPACER NO.4 ID 1/4 OD 3/32L NI	UNICORP S-503-M01-F0	
006	A071494	002.00 EA	NUT 4-40 UNC-2B,PLAIN-HEX,SST	PER MS35649-244	
007	A072321	002.00 EA	SCREW 4-40 X 3/8 F HD,82 DEG,SST	ATY 72321	
008	A073266	002.00 EA	WASHER-NO. 4- .125 .250 .022 AUS SST	PER ANSI B.18.22.1	
009	A073265	002.00 EA	WASHER NO. 4 LOCK EXT TOOTH CAD PLT STL	PER MS35335-29	96906
010	A175490	001.00 PR	CONN MISC JACKSKT ASSY PR SHT	3341-1S	
011	A082463	001.00 EA	EXTRACTOR PC BOARD	THC 5005-08N	

A328078 ASSY PWB DS3 2X2 A328078

Revision F
Effective: January 21, 1992

REF	SA PART	Qty	Description	Mfr Part	CAGE
	A309701	000.00 EA	DAS DS3 2X2 BD TEST PROCEDURE		
U023	A309225	001.00 EA	ASSY PAL PROGRAM U23 2X2	PER SA DWG 309225	10110
U024	A309226	001.00 EA	ASSY PAL PROGRAM U24 2X2		
U025	M448988	001.00 EA	PAL ASSEMBLY,U25 2 X 2 DS3	PER SA DWG 448988	42061
U029	A309228	001.00 EA	ASSY PAL PROGRAM U29 2X2	PER SA DWG 309228	10110
001	A327980	001.00 EA	SUB-ASSY PWB DS3 2X2		
002	A489755	001.00 EA	EPROM ASSEMBLY, DS3, 2 X 2	PER SA DWG 489755	42061
003	A309111	001.00 EA	BRACKET BOARD LEGEND -2X2 DS3	PER SA DWG.	
004	A328072	001.00 EA	LABEL 2X2 DS3 PCB	PER PRINT #328072	
005	A177365	002.00 EA	SPACER NO.4 ID 1/4 OD 3/32L NI	UNICORP S-503-M01-F0	
006	A071494	002.00 EA	NUT 4-40 UNC-2B,PLAIN-HEX,SST	PER MS35649-244	
007	A072321	002.00 EA	SCREW 4-40 X 3/8 F HD,82 DEG,SST	ATY 72321	
008	A073266	002.00 EA	WASHER-NO. 4- .125 .250 .022 AUS SST	PER ANSI B.18.22.1	
009	A073265	002.00 EA	WASHER NO. 4 LOCK EXT TOOTH CAD PLT STL	PER MS35335-29	96906
025	M448988	001.00 EA	PAL ASSEMBLY,U25 2 X 2 DS3	PER SA DWG 448988	42061

A328079 ASSY PWB ANALOG DAS A328079

Revision E
Effective: January 08, 1992

REF	SA PART	Qty	Description	Mfr Part	CAGE
J010	A307232	001.00 EA	JACK PHONE 3-COND T-R AU RTANG	PER SA DWG.	
J016	A176125	001.00 EA	CONN COAX BNC FEM RT ANG PC MT	UCBJR20	
J13	A174930	001.00 EA	CONN HDR SGL ROW STR 3-PIN PC MT	MLSS100-3	
J14	A084940	001.00 EA	CONN COAX SMB MALE PC MT 75 OHM	51-151-0000-220	
U024	A309652	001.00 EA	ASSY PAL PROGRAM U24 ANALOG	PER SA DWG 309652	10110
U025	A309653	001.00 EA	ASSY PAL PROGRAM U25 ANALOG	PER SA DWG 309653	10110
U026	A309654	001.00 EA	ASSY PAL PROGRAM U26 ANALOG	PER SA DWG 309654	10110
U033	A309655	001.00 EA	ASSY PAL PROGRAM U33 ANALOG	PER SA DWG 309655	10110
U038	A309656	001.00 EA	ASSY PAL PROGRAM U38 ANALOG	PER SA DWG 309656	10110
U039	A309657	001.00 EA	ASSY PAL PROGRAM U39 ANALOG	PER SA DWG 309657	10110
001	A327989	001.00 EA	SUB-ASSY ANALOG PWB		
002	A309107	001.00 EA	BRACKET BOARD LEGEND-ANALOG	PER SA DWG.	
004	A177365	002.00 EA	SPACER NO.4 ID 1/4 OD 3/32L NI	UNICORP S-503-M01-F0	
005	A071494	002.00 EA	NUT 4-40 UNC-2B,PLAIN-HEX,SST	PER MS35649-244	
006	A072321	002.00 EA	SCREW 4-40 X 3/8 F HD,82 DEG,SST	ATY 72321	
007	A073266	002.00 EA	WASHER-NO. 4- .125 .250 .022 AUS SST	PER ANSI B.18.22.1	
008	A073265	002.00 EA	WASHER NO. 4 LOCK EXT TOOTH CAD PLT STL	PER MS35335-29	96906
009	A461093	001.00 EA	EPROM 7 LBL SET ANALOG DTA/DAS		
010	A082463	001.00 EA	EXTRACTOR PC BOARD	THC 5005-08N	
011	A459012	002.00 EA	SHIELD SEPARATOR MYLAR/COPPER		

A456206 ASSY PWB POWER SUPPLY AC DAS A456206

Revision -
Effective: July 01, 1990

REF	SA PART	Qty	Description	Mfr Part	CAGE
	A456248	000.00 EA	SCHEM POWER SUPPLY AC DAS		
CR001	A174000	000.00 EA	NOT USED ON THIS ASSEMBLY		
CR002	A174000	000.00 EA	NOT USED ON THIS ASSEMBLY		
CR003	A077488	001.00 EA	DIODE 1N4737A SI ZEN 7.5V 5% 1W	FSC 1N4737A	
CR004	A078274	001.00 EA	DIODE 1N4002 SIL 100V 1A	1N4002	
CR005	A078274	001.00 EA	DIODE 1N4002 SIL 100V 1A	1N4002	
CR006	A174000	000.00 EA	NOT USED ON THIS ASSEMBLY		
CR007	A174000	000.00 EA	NOT USED ON THIS ASSEMBLY		
CR008	A177283	001.00 EA	RECTIFIER ASSY 600V 6A	GI KBU8J	
C001	A070544	001.00 EA	CAPACITR .001 MF 1KV CER DISC Z5F 10%	DD102	
C002	A075417	001.00 EA	CAPACITR .01 MF 150V CER DISC Z5V-40+60%	CEN DDM-103	
C003	A174000	000.00 EA	NOT USED ON THIS ASSEMBLY		
C004	A174000	000.00 EA	NOT USED ON THIS ASSEMBLY		
C005	A174000	000.00 EA	NOT USED ON THIS ASSEMBLY		
C006	A174000	000.00 EA	NOT USED ON THIS ASSEMBLY		
C007	A081254	001.00 EA	CAPACITR .01 MF 1.4KV CER AC LINE BYPASS	CI-103	
C008	A075417	001.00 EA	CAPACITR .01 MF 150V CER DISC Z5V-40+60%	CEN DDM-103	
C009	A081254	001.00 EA	CAPACITR .01 MF 1.4KV CER AC LINE BYPASS	CI-103	
C010	A086013	001.00 EA	CAPACITR 22 MF 25V SOLID TANT	T354H226K025AS	
C011	A174000	000.00 EA	NOT USED ON THIS ASSEMBLY		
C012	A174000	000.00 EA	NOT USED ON THIS ASSEMBLY		
C013	A174000	000.00 EA	NOT USED ON THIS ASSEMBLY		
C014	A177093	001.00 EA	CAPACITOR 470MF 200V RDL LEADS	SP 80D471P200MB5	
C015	A177093	001.00 EA	CAPACITOR 470MF 200V RDL LEADS	SP 80D471P200MB5	
C016	A174000	000.00 EA	NOT USED ON THIS ASSEMBLY		
C017	A174000	000.00 EA	NOT USED ON THIS ASSEMBLY		
C018	A070544	001.00 EA	CAPACITR .001 MF 1KV CER DISC Z5F 10%	DD102	
C019	A170610	001.00 EA	CAPACITR 220MF 35V +/-20%	227RMR035M	
C020	A170610	001.00 EA	CAPACITR 220MF 35V +/-20%	227RMR035M	
C021	A174000	000.00 EA	NOT USED ON THIS ASSEMBLY		
C022	A080139	001.00 EA	CAPACITR .1 MF 50V CER MONO -20%/+80%	RPE122Z5U104Z050V	
C023	A170263	001.00 EA	CAPACITR 100 MF 20V	SP 672D107H020CG5C	
C024	A070544	001.00 EA	CAPACITR .001 MF 1KV CER DISC Z5F 10%	DD102	
C025	A080139	001.00 EA	CAPACITR .1 MF 50V CER MONO -20%/+80%	RPE122Z5U104Z050V	
C026	A170263	001.00 EA	CAPACITR 100 MF 20V	SP 672D107H020CG5C	
C027	A170263	001.00 EA	CAPACITR 100 MF 20V	SP 672D107H020CG5C	
C028	A080139	001.00 EA	CAPACITR .1 MF 50V CER MONO -20%/+80%	RPE122Z5U104Z050V	
C029	A081101	001.00 EA	CAPACITR 1 MF 50V CER MONO 20%	RPE113Z5U105M50V	
C030	A081101	001.00 EA	CAPACITR 1 MF 50V CER MONO 20%	RPE113Z5U105M50V	
C031	A081254	001.00 EA	CAPACITR .01 MF 1.4KV CER AC LINE BYPASS	CI-103	
C032	A174000	000.00 EA	NOT USED ON THIS ASSEMBLY		
C033	A174000	000.00 EA	NOT USED ON THIS ASSEMBLY		
C034	A173964	001.00 EA	CAPACITR .05 MF 500V CER DISC Z5U 20%	SP 5GA-S50	
C035	A081254	001.00 EA	CAPACITR .01 MF 1.4KV CER AC LINE BYPASS	CI-103	
C036	A081254	001.00 EA	CAPACITR .01 MF 1.4KV CER AC LINE BYPASS	CI-103	
C037	A174000	000.00 EA	NOT USED ON THIS ASSEMBLY		
C038	A173964	001.00 EA	CAPACITR .05 MF 500V CER DISC Z5U 20%	SP 5GA-S50	
C039	A177093	001.00 EA	CAPACITOR 470MF 200V RDL LEADS	SP 80D471P200MB5	
C040	A177093	001.00 EA	CAPACITOR 470MF 200V RDL LEADS	SP 80D471P200MB5	
DS001	A174000	000.00 EA	NOT USED ON THIS ASSEMBLY		
DS002	A174000	000.00 EA	NOT USED ON THIS ASSEMBLY		
J001	A174000	000.00 EA	NOT USED ON THIS ASSEMBLY		
J002	A177303	002.00 EA	BARRIER STRIP 8-TERM SGL ROW	17-15-78-9	
J003	A174000	000.00 EA	NOT USED ON THIS ASSEMBLY		
J004	A177037	001.00 EA	CONN HDR SGL ROW STR 3-PIN PC MT LOCKING .295	22-11-2032	

A456206 ASSY PWB POWER SUPPLY AC DAS A456206

Revision -
Effective: July 01, 1990

REF	SA PART	Qty	Description	Mfr Part	CAGE
J005	A177171	001.00 EA	CONN HDR SNGL RW STR 12PIN.156	MMM #CLN-1012-1CA10-	
J006	A177037	001.00 EA	CONN HDR SGL ROW STR 3-PIN PC MT LOCKING .295	22-11-2032	
K001	A178472	001.00 EA	RELAY 6VDC 4PDT PC MT 10A CONT	TYP154-4C-6VDC	
L001	A174000	000.00 EA	NOT USED ON THIS ASSEMBLY		
L002	A327919	001.00 EA	INDUCTOR POWER TOROIDAL	PER SA DWG.	
L003	A327919	001.00 EA	INDUCTOR POWER TOROIDAL	PER SA DWG.	
L004	A174000	000.00 EA	NOT USED ON THIS ASSEMBLY		
L005	A327919	001.00 EA	INDUCTOR POWER TOROIDAL	PER SA DWG.	
L006	A085235	001.00 EA	INDUCTOR 1.0 MH FERRITE CHOKE .6A Q-32	6310-12	
L007	A085235	001.00 EA	INDUCTOR 1.0 MH FERRITE CHOKE .6A Q-32	6310-12	
L008	A309273	001.00 EA	INDUCTOR A/C LINE		
Q001	A077148	001.00 EA	TRANSSTR 2N3251 PNP SIL	2N3251	
Q002	A077148	001.00 EA	TRANSSTR 2N3251 PNP SIL	2N3251	
Q003	A077147	001.00 EA	TRANSSTR 2N3947 NPN SIL	MOT 2N3947	
Q004	A077147	001.00 EA	TRANSSTR 2N3947 NPN SIL	MOT 2N3947	
RT001	A174000	000.00 EA	NOT USED ON THIS ASSEMBLY		
RT002	A175602	001.00 EA	THERMSTR 47 OHM DISC 25 DEG C	KTC CL-80	
RV001	A081844	001.00 EA	VARISTOR 150V RMS .5 WATTS	GE V150-LA10A	
RV002	A174000	000.00 EA	NOT USED ON THIS ASSEMBLY		
R001	A174000	000.00 EA	NOT USED ON THIS ASSEMBLY		
R002	A174000	000.00 EA	NOT USED ON THIS ASSEMBLY		
R003	A075686	001.00 EA	RESISTOR 39K OHM 2W 10% COMP	RCR42G393KS	
R004	A075686	001.00 EA	RESISTOR 39K OHM 2W 10% COMP	RCR42G393KS	
R005	A174949	001.00 EA	RESISTOR 10.0K OHM 1/4W 1% MTL FLM	CCF-551002F	
R006	A174951	001.00 EA	RESISTOR 20.0K OHM 1/4W 1% MTL FLM	CCF-552002F	
R007	A083429	001.00 EA	RESISTOR 332K OHM RN55C 1% MTL FLM	CEC RN 55C3323F	
R008	A174949	001.00 EA	RESISTOR 10.0K OHM 1/4W 1% MTL FLM	CCF-551002F	
R009	A083914	001.00 EA	RESISTOR 8.66K OHM RN55C 1% MTL FLM	DP RN55C8661F	
R010	A178275	001.00 EA	RESISTOR 301K OHM 1/4W 1% 100PPM MTL FLM	5043ED301K0F	
R011	A083914	001.00 EA	RESISTOR 8.66K OHM RN55C 1% MTL FLM	DP RN55C8661F	
R012	A086951	001.00 EA	RESISTOR 562K OHM RN55C 1% MTL FLM	DP RN55C5623F	
R013	A087840	001.00 EA	POT 10K OHM 1/2W CER 3/8 SQ VERT ADJ 25T	3299W-1-1003	
R014	A087840	001.00 EA	POT 10K OHM 1/2W CER 3/8 SQ VERT ADJ 25T	3299W-1-1003	
R015	A178232	001.00 EA	RESISTOR 499 OHM 1/4W 1% 100PPM MTL FLM	5043ED499R0F	
R016	A178234	001.00 EA	RESISTOR 562 OHM 1/4W 1% 100PPM MTL FLM	5043ED562R0F	
R017	A178258	001.00 EA	RESISTOR 4.75K OHM 1/4W 1% 100PPM MTL FLM	5043ED4K750F	
R018	A178241	001.00 EA	RESISTOR 1.00K OHM 1/4W 1% 100PPM MTL FLM	5043ED1K000F	
R019	A174954	001.00 EA	RESISTOR 46.4K OHM 1/4W 1% MTL FLM	RN55C4642F	
R020	A178262	001.00 EA	RESISTOR 6.81K OHM 1/4W 1% 100PPM MTL FLM	5043ED6K810F	
R021	A178274	001.00 EA	RESISTOR 249K OHM 1/4W 1% 100PPM MTL FLM	5043ED249K0F	
R022	A178274	001.00 EA	RESISTOR 249K OHM 1/4W 1% 100PPM MTL FLM	5043ED249K0F	
R023	A178274	001.00 EA	RESISTOR 249K OHM 1/4W 1% 100PPM MTL FLM	5043ED249K0F	
R024	A174000	000.00 EA	NOT USED ON THIS ASSEMBLY		
R025	A178274	001.00 EA	RESISTOR 249K OHM 1/4W 1% 100PPM MTL FLM	5043ED249K0F	
R026	A071859	001.00 EA	RESISTOR 33 OHM 1W 10% COMP	RCR32G330KS	
R027	A072080	001.00 EA	RESISTOR 47K OHM 2W 10% COMP	RCR42G473JS	
R028	A072080	001.00 EA	RESISTOR 47K OHM 2W 10% COMP	RCR42G473JS	
R029	A071839	001.00 EA	RESISTOR 10 OHM 2W 10% COMP	RCR42G100KS	
R030	A080266	001.00 EA	RESISTOR 2.0 MEG 1W 5% COMP	RCR32G250JS	
TP001	A317165	001.00 EA	TEST POINT .200 CENTER	PER DWG. 317165	
TP002	A317165	001.00 EA	TEST POINT .200 CENTER	PER DWG. 317165	
TP003	A317165	001.00 EA	TEST POINT .200 CENTER	PER DWG. 317165	
U001	A178477	001.00 EA	CKT MDLR CNVTR 100W AMP/260-CW	VI-B60-CW	
U002	A178475	001.00 EA	CKT MDLR CNVTR 300V TO 5V 100W	VI-260-CW	

A456206 ASSY PWB POWER SUPPLY AC DAS A456206

Revision -
Effective: July 01, 1990

REF	SA PART	Qty	Description	Mfr Part	CAGE
U003	A177094	001.00 EA	CKT MODULR CNVTR 200-400V / 5V	LM-260-CX	
U004	A174000	000.00 EA	NOT USED ON THIS ASSEMBLY		
U005	A174000	000.00 EA	NOT USED ON THIS ASSEMBLY		
U006	A172179	001.00 EA	IC COMPARATOR - VOLTAGE 8L - DIP DUAL	LM393N	
U007	A174715	001.00 EA	OPTO-ISOLA 3.55KVDC NPN PXSTR	GE 4N35	
001	A456205	001.00 EA	PWB POWER SUPPLY DAS	PER SA DWG. 456205 B	
002	A175172	012.00 EA	SPACER .143 ID 9/32 OD 1/2 L	PNN KFSE-143-16	
003	A177129	006.00 EA	SPACER.143ID 9/32 OD 5/8LNGBR	PNN KFSE-143-20	
004	A073317	000.10 FT	WIRE 20 BUS	LAN #L20S 100/SPLS	
9500	A459432	000.00 EA	TEST PROCEDURE DAS POWERSUPPLY		

A456211 SUB-ASSY DS1 2X2 A456211

Revision B
Effective: September 26, 1991

REF	SA PART	Qty	Description	Mfr Part	CAGE
	A456271	000.00 EA	TEST PROCEDURE FOR DAS DS1 2X2		
BB001	A177102	001.00 EA	BUS DISTRBTN 2-LYR VERT MT 36-PIN IN-LINE	RAZ QV-2 17.6.3 (.1)	
BB002	A177102	001.00 EA	BUS DISTRBTN 2-LYR VERT MT 36-PIN IN-LINE	RAZ QV-2 17.6.3 (.1)	
CR001	A071122	001.00 EA	DIODE 1N914 SIL 75V 75MA	1N914	
CR002	A071122	001.00 EA	DIODE 1N914 SIL 75V 75MA	1N914	
CR003	A071122	001.00 EA	DIODE 1N914 SIL 75V 75MA	1N914	
CR004	A071122	001.00 EA	DIODE 1N914 SIL 75V 75MA	1N914	
C001	A080139	001.00 EA	CAPACITR .1 MF 50V CER MONO -20%/+80%	RPE122Z5U104Z050V	
C002	A080139	001.00 EA	CAPACITR .1 MF 50V CER MONO -20%/+80%	RPE122Z5U104Z050V	
C003	A081095	001.00 EA	CAPACITR 3.3 MF 50V CER MONO 20%	3C37Z5U335M050B	
C004	A080139	001.00 EA	CAPACITR .1 MF 50V CER MONO -20%/+80%	RPE122Z5U104Z050V	
C005	A176497	001.00 EA	CAP .01MF 50V CER MON 10% .2LS	RPE122X7R103K50V	
C006	A172707	001.00 EA	CAPACITR .068 MF 10% 50V CER MONO	RPE122X7R683K50V	
C007	A080139	001.00 EA	CAPACITR .1 MF 50V CER MONO -20%/+80%	RPE122Z5U104Z050V	
C008	A176497	001.00 EA	CAP .01MF 50V CER MON 10% .2LS	RPE122X7R103K50V	
C009	A070470	001.00 EA	CAPACITR 10 PF 500V SILVER MICA 5%	CD15CD100J03	
C010	A035656	001.00 EA	CAPACITR 100 MF 20V 10% SOLID TANT POL	T354M107K020AS	
C011	A080139	001.00 EA	CAPACITR .1 MF 50V CER MONO -20%/+80%	RPE122Z5U104Z050V	
C012	A081995	001.00 EA	CAPACITR .001 MF 100V CER MONO X7R 10% .1LS	RPE121X7R102K100V	
C013	A080139	001.00 EA	CAPACITR .1 MF 50V CER MONO -20%/+80%	RPE122Z5U104Z050V	
C014	A080139	001.00 EA	CAPACITR .1 MF 50V CER MONO -20%/+80%	RPE122Z5U104Z050V	
C015	A080139	001.00 EA	CAPACITR .1 MF 50V CER MONO -20%/+80%	RPE122Z5U104Z050V	
C016	A080139	001.00 EA	CAPACITR .1 MF 50V CER MONO -20%/+80%	RPE122Z5U104Z050V	
C017	A080139	001.00 EA	CAPACITR .1 MF 50V CER MONO -20%/+80%	RPE122Z5U104Z050V	
C018	A081808	001.00 EA	CAPACITR 2.2 MF 50V CER MONO 20%	RPE114Z5U225M50V	
C019	A035656	001.00 EA	CAPACITR 100 MF 20V 10% SOLID TANT POL	T354M107K020AS	
C020	A080139	001.00 EA	CAPACITR .1 MF 50V CER MONO -20%/+80%	RPE122Z5U104Z050V	
C021	A035656	001.00 EA	CAPACITR 100 MF 20V 10% SOLID TANT POL	T354M107K020AS	
C022	A080139	001.00 EA	CAPACITR .1 MF 50V CER MONO -20%/+80%	RPE122Z5U104Z050V	
C023	A081095	001.00 EA	CAPACITR 3.3 MF 50V CER MONO 20%	3C37Z5U335M050B	
C024	A080139	001.00 EA	CAPACITR .1 MF 50V CER MONO -20%/+80%	RPE122Z5U104Z050V	
C025	A080139	001.00 EA	CAPACITR .1 MF 50V CER MONO -20%/+80%	RPE122Z5U104Z050V	
C026	A176497	001.00 EA	CAP .01MF 50V CER MON 10% .2LS	RPE122X7R103K50V	
C027	A081095	001.00 EA	CAPACITR 3.3 MF 50V CER MONO 20%	3C37Z5U335M050B	
C028	A172707	001.00 EA	CAPACITR .068 MF 10% 50V CER MONO	RPE122X7R683K50V	
C029	A080139	001.00 EA	CAPACITR .1 MF 50V CER MONO -20%/+80%	RPE122Z5U104Z050V	
C030	A176497	001.00 EA	CAP .01MF 50V CER MON 10% .2LS	RPE122X7R103K50V	
C031	A070470	001.00 EA	CAPACITR 10 PF 500V SILVER MICA 5%	CD15CD100J03	
C032	A035656	001.00 EA	CAPACITR 100 MF 20V 10% SOLID TANT POL	T354M107K020AS	
C033	A080139	001.00 EA	CAPACITR .1 MF 50V CER MONO -20%/+80%	RPE122Z5U104Z050V	
C034	A081995	001.00 EA	CAPACITR .001 MF 100V CER MONO X7R 10% .1LS	RPE121X7R102K100V	
C035	A080139	001.00 EA	CAPACITR .1 MF 50V CER MONO -20%/+80%	RPE122Z5U104Z050V	
C036	A080139	001.00 EA	CAPACITR .1 MF 50V CER MONO -20%/+80%	RPE122Z5U104Z050V	
C037	A080139	001.00 EA	CAPACITR .1 MF 50V CER MONO -20%/+80%	RPE122Z5U104Z050V	
C038	A080139	001.00 EA	CAPACITR .1 MF 50V CER MONO -20%/+80%	RPE122Z5U104Z050V	
C039	A080139	001.00 EA	CAPACITR .1 MF 50V CER MONO -20%/+80%	RPE122Z5U104Z050V	
C040	A081808	001.00 EA	CAPACITR 2.2 MF 50V CER MONO 20%	RPE114Z5U225M50V	
C041	A035656	001.00 EA	CAPACITR 100 MF 20V 10% SOLID TANT POL	T354M107K020AS	
C042	A080139	001.00 EA	CAPACITR .1 MF 50V CER MONO -20%/+80%	RPE122Z5U104Z050V	
C043	A035656	001.00 EA	CAPACITR 100 MF 20V 10% SOLID TANT POL	T354M107K020AS	
C044	A080139	001.00 EA	CAPACITR .1 MF 50V CER MONO -20%/+80%	RPE122Z5U104Z050V	
C045	A081210	001.00 EA	CAPACITR .01 MF 50V CER MONO X7R 10%	RPE121X7R103K50V	
C046	A081210	001.00 EA	CAPACITR .01 MF 50V CER MONO X7R 10%	RPE121X7R103K50V	
C047	A081210	001.00 EA	CAPACITR .01 MF 50V CER MONO X7R 10%	RPE121X7R103K50V	
C048	A081210	001.00 EA	CAPACITR .01 MF 50V CER MONO X7R 10%	RPE121X7R103K50V	

A456211 SUB-ASSY DS1 2X2 A456211

Revision B
Effective: September 26, 1991

REF	SA PART	Qty	Description	Mfr Part	CAGE
C049	A080139	001.00 EA	CAPACITR .1 MF 50V CER MONO -20%/+80%	RPE122Z5U104Z050V	
C050	A080139	001.00 EA	CAPACITR .1 MF 50V CER MONO -20%/+80%	RPE122Z5U104Z050V	
C051	A080139	001.00 EA	CAPACITR .1 MF 50V CER MONO -20%/+80%	RPE122Z5U104Z050V	
C052	A080139	001.00 EA	CAPACITR .1 MF 50V CER MONO -20%/+80%	RPE122Z5U104Z050V	
C053	A080139	001.00 EA	CAPACITR .1 MF 50V CER MONO -20%/+80%	RPE122Z5U104Z050V	
C054	A083649	001.00 EA	CAPACITR 7-25 PF MIN CER DISC PC MT	538-011-B-7-25	
C055	A080139	001.00 EA	CAPACITR .1 MF 50V CER MONO -20%/+80%	RPE122Z5U104Z050V	
C056	A080139	001.00 EA	CAPACITR .1 MF 50V CER MONO -20%/+80%	RPE122Z5U104Z050V	
C057	A035656	001.00 EA	CAPACITR 100 MF 20V 10% SOLID TANT POL	T354M107K020AS	
C058	A080139	001.00 EA	CAPACITR .1 MF 50V CER MONO -20%/+80%	RPE122Z5U104Z050V	
C059	A035656	001.00 EA	CAPACITR 100 MF 20V 10% SOLID TANT POL	T354M107K020AS	
C060	A080139	001.00 EA	CAPACITR .1 MF 50V CER MONO -20%/+80%	RPE122Z5U104Z050V	
C061	A083258	001.00 EA	CAPACITR CHIP .1 MF 50V	C1812C104M5XAH	
C062	A083258	001.00 EA	CAPACITR CHIP .1 MF 50V	C1812C104M5XAH	
C063	A083258	001.00 EA	CAPACITR CHIP .1 MF 50V	C1812C104M5XAH	
C064	A083258	001.00 EA	CAPACITR CHIP .1 MF 50V	C1812C104M5XAH	
C065	A083258	001.00 EA	CAPACITR CHIP .1 MF 50V	C1812C104M5XAH	
C066	A083258	001.00 EA	CAPACITR CHIP .1 MF 50V	C1812C104M5XAH	
C067	A083258	001.00 EA	CAPACITR CHIP .1 MF 50V	C1812C104M5XAH	
C068	A083258	001.00 EA	CAPACITR CHIP .1 MF 50V	C1812C104M5XAH	
C069	A083258	001.00 EA	CAPACITR CHIP .1 MF 50V	C1812C104M5XAH	
C070	A083258	001.00 EA	CAPACITR CHIP .1 MF 50V	C1812C104M5XAH	
C071	A173733	001.00 EA	CAPACITR IC BYPASS FOR .3W 24L-DIP .03MF	30322A	
C072	A173733	001.00 EA	CAPACITR IC BYPASS FOR .3W 24L-DIP .03MF	30322A	
C073	A082952	001.00 EA	CAPACITR 220 PF 1KV CER DISC Z5F 10%	CEN -DD-221	
C074	A080139	001.00 EA	CAPACITR .1 MF 50V CER MONO -20%/+80%	RPE122Z5U104Z050V	
C075	A084223	001.00 EA	CAPACITR .047 MF 100V CER MONO X7R 10%	RPE122X7R473K100V	
C076	A080139	001.00 EA	CAPACITR .1 MF 50V CER MONO -20%/+80%	RPE122Z5U104Z050V	
C077	A084223	001.00 EA	CAPACITR .047 MF 100V CER MONO X7R 10%	RPE122X7R473K100V	
DS001	A177211	001.00 EA	LAMP LED-RSTR RED PC MT 5V 3MA	555-2007	
DS002	A177211	001.00 EA	LAMP LED-RSTR RED PC MT 5V 3MA	555-2007	
DS003	A177211	001.00 EA	LAMP LED-RSTR RED PC MT 5V 3MA	555-2007	
DS004	A177211	001.00 EA	LAMP LED-RSTR RED PC MT 5V 3MA	555-2007	
E017	A177971	001.00 EA	CHOKE WIDE-BAND 3B .236X394L	VK20009-3B	
J001	A174000	000.00 EA	NOT USED ON THIS ASSEMBLY		
J002	A175564	001.00 EA	CONN HEADER SGL ROW STRAIGHT 3-PIN .09H PC MT	929805-01-03-30	
J003	A307232	001.00 EA	JACK PHONE 3-COND T-R AU RTANG	PER SA DWG.	
J004	A174000	000.00 EA	NOT USED ON THIS ASSEMBLY		
J005	A307232	001.00 EA	JACK PHONE 3-COND T-R AU RTANG	PER SA DWG.	
J006	A174000	000.00 EA	NOT USED ON THIS ASSEMBLY		
J007	A174000	000.00 EA	NOT USED ON THIS ASSEMBLY		
J008	A175564	001.00 EA	CONN HEADER SGL ROW STRAIGHT 3-PIN .09H PC MT	929805-01-03-30	
J009	A307232	001.00 EA	JACK PHONE 3-COND T-R AU RTANG	PER SA DWG.	
J010	A174000	000.00 EA	NOT USED ON THIS ASSEMBLY		
J011	A307232	001.00 EA	JACK PHONE 3-COND T-R AU RTANG	PER SA DWG.	
J012	A174000	000.00 EA	NOT USED ON THIS ASSEMBLY		
J013	A176125	001.00 EA	CONN COAX BNC FEM RT ANG PC MT	UCBJR20	
J014	A174000	000.00 EA	NOT USED ON THIS ASSEMBLY		
J015	A173712	001.00 EA	CONN RECT 96-COND MALE PNL MT RT ANG PC MT	532505-1	00779
J016	A174000	000.00 EA	NOT USED ON THIS ASSEMBLY		
J017	A174000	000.00 EA	NOT USED ON THIS ASSEMBLY		
J018	A173712	001.00 EA	CONN RECT 96-COND MALE PNL MT RT ANG PC MT	532505-1	00779
J020	A174000	000.00 EA	NOT USED ON THIS ASSEMBLY		
J021	A087229	001.00 EA	CONN HEADER SGL ROW STRAIGHT 2-PIN PC MT	87220-2	00779

A456211 SUB-ASSY DS1 2X2 A456211

Revision B
Effective: September 26, 1991

REF	SA PART	Qty	Description	Mfr Part	CAGE
J022	A087229	001.00 EA	CONN HEADER SGL ROW STRAIGHT 2-PIN PC MT	87220-2	00779
J023	A087229	001.00 EA	CONN HEADER SGL ROW STRAIGHT 2-PIN PC MT	87220-2	00779
J024	A087229	001.00 EA	CONN HEADER SGL ROW STRAIGHT 2-PIN PC MT	87220-2	00779
L001	A078716	001.00 EA	INDUCTOR 100 UH SUBMIN UNSHLD 10%	IR-2 100UH	
L002	A078716	001.00 EA	INDUCTOR 100 UH SUBMIN UNSHLD 10%	IR-2 100UH	
L003	A078716	001.00 EA	INDUCTOR 100 UH SUBMIN UNSHLD 10%	IR-2 100UH	
L004	A078716	001.00 EA	INDUCTOR 100 UH SUBMIN UNSHLD 10%	IR-2 100UH	
L005	A078716	001.00 EA	INDUCTOR 100 UH SUBMIN UNSHLD 10%	IR-2 100UH	
L006	A078716	001.00 EA	INDUCTOR 100 UH SUBMIN UNSHLD 10%	IR-2 100UH	
P002	A175566	001.00 EA	JUMPER FOR .09H HDR 2-PIN FEM	87092-3012	
P008	A175566	001.00 EA	JUMPER FOR .09H HDR 2-PIN FEM	87092-3012	
Q001	A079660	001.00 EA	TRANSSTR 2N4093 FET N-CHNL JUNC	2N4093	
Q002	A079660	001.00 EA	TRANSSTR 2N4093 FET N-CHNL JUNC	2N4093	
Q003	A083032	001.00 EA	TRANSSTR 2N2222A NPN SIL	FSC 2N2222A	
R001	A178258	001.00 EA	RESISTOR 4.75K OHM 1/4W 1% 100PPM MTL FLM	5043ED4K750F	
R002	A178258	001.00 EA	RESISTOR 4.75K OHM 1/4W 1% 100PPM MTL FLM	5043ED4K750F	
R003	A178258	001.00 EA	RESISTOR 4.75K OHM 1/4W 1% 100PPM MTL FLM	5043ED4K750F	
R004	A178258	001.00 EA	RESISTOR 4.75K OHM 1/4W 1% 100PPM MTL FLM	5043ED4K750F	
R005	A178258	001.00 EA	RESISTOR 4.75K OHM 1/4W 1% 100PPM MTL FLM	5043ED4K750F	
R006	A178258	001.00 EA	RESISTOR 4.75K OHM 1/4W 1% 100PPM MTL FLM	5043ED4K750F	
R007	A178258	001.00 EA	RESISTOR 4.75K OHM 1/4W 1% 100PPM MTL FLM	5043ED4K750F	
R008	A178258	001.00 EA	RESISTOR 4.75K OHM 1/4W 1% 100PPM MTL FLM	5043ED4K750F	
R009	A178258	001.00 EA	RESISTOR 4.75K OHM 1/4W 1% 100PPM MTL FLM	5043ED4K750F	
R010	A178258	001.00 EA	RESISTOR 4.75K OHM 1/4W 1% 100PPM MTL FLM	5043ED4K750F	
R011	A178210	001.00 EA	RESISTOR 75.0 OHM 1/4W 1% 100PPM MTL FLM	5043ED75R00F	
R012	A178258	001.00 EA	RESISTOR 4.75K OHM 1/4W 1% 100PPM MTL FLM	5043ED4K750F	
R013	A178210	001.00 EA	RESISTOR 75.0 OHM 1/4W 1% 100PPM MTL FLM	5043ED75R00F	
R014	A178258	001.00 EA	RESISTOR 4.75K OHM 1/4W 1% 100PPM MTL FLM	5043ED4K750F	
R015	A178258	001.00 EA	RESISTOR 4.75K OHM 1/4W 1% 100PPM MTL FLM	5043ED4K750F	
R016	A178241	001.00 EA	RESISTOR 1.00K OHM 1/4W 1% 100PPM MTL FLM	5043ED1K000F	
R017	A178252	001.00 EA	RESISTOR 3.32K OHM 1/4W 1% 100PPM MTL FLM	5043ED3K320F	
R018	A174954	001.00 EA	RESISTOR 46.4K OHM 1/4W 1% MTL FLM	RN55C4642F	
R019	A178269	001.00 EA	RESISTOR 40.2K OHM 1/4W 1% 100PPM MTL FLM	5043ED40K20F	
R020	A174954	001.00 EA	RESISTOR 46.4K OHM 1/4W 1% MTL FLM	RN55C4642F	
R021	A174954	001.00 EA	RESISTOR 46.4K OHM 1/4W 1% MTL FLM	RN55C4642F	
R022	A178241	001.00 EA	RESISTOR 1.00K OHM 1/4W 1% 100PPM MTL FLM	5043ED1K000F	
R023	A178252	001.00 EA	RESISTOR 3.32K OHM 1/4W 1% 100PPM MTL FLM	5043ED3K320F	
R024	A178241	001.00 EA	RESISTOR 1.00K OHM 1/4W 1% 100PPM MTL FLM	5043ED1K000F	
R025	A178258	001.00 EA	RESISTOR 4.75K OHM 1/4W 1% 100PPM MTL FLM	5043ED4K750F	
R026	A174949	001.00 EA	RESISTOR 10.0K OHM 1/4W 1% MTL FLM	CCF-551002F	
R027	A087841	001.00 EA	POT 20K OHM 1/2W CER 3/8 SQ VERT ADJ 25T	3299W-1-203	
R028	A174000	000.00 EA	NOT USED ON THIS ASSEMBLY		
R029	A178248	001.00 EA	RESISTOR 2.00K OHM 1/4W 1% 100PPM MTL FLM	5043ED2K000F	
R030	A087838	001.00 EA	POT 2K OHM 1/2W CER 3/8 SQ VERT ADJ 25T	3299W-1-202	BOUR
R031	A178241	001.00 EA	RESISTOR 1.00K OHM 1/4W 1% 100PPM MTL FLM	5043ED1K000F	
R032	A178268	001.00 EA	RESISTOR 36.5K OHM 1/4W 1% 100PPM MTL FLM	5043ED36K50F	
R033	A178326	001.00 EA	RESISTOR 22.1 OHM 1/4W 1% 100PPM MTL FLM	5043ED22R10F	
R034	A178249	001.00 EA	RESISTOR 2.21K OHM 1/4W 1% 100PPM MTL FLM	5043ED2K210F	
R035	A178265	001.00 EA	RESISTOR 12.7K OHM 1.4W 1% 100PPM MTL FLM	5043ED12K70F	
R036	A174000	000.00 EA	NOT USED ON THIS ASSEMBLY		
R037	A178326	001.00 EA	RESISTOR 22.1 OHM 1/4W 1% 100PPM MTL FLM	5043ED22R10F	
R038	A178249	001.00 EA	RESISTOR 2.21K OHM 1/4W 1% 100PPM MTL FLM	5043ED2K210F	
R039	A178308	001.00 EA	RESISTOR 22.1K OHM 1/4W 1% 100PPM MTL FLM	5043ED22K10F	
R040	A178334	001.00 EA	RESISTOR 31.6 OHM 1/4W 1% 100PPM MTL FLM	5043ED31R60F	

A456211 SUB-ASSY DS1 2X2 A456211

Revision B
Effective: September 26, 1991

REF	SA PART	Qty	Description	Mfr Part	CAGE
R041	A083795	001.00 EA	RESISTOR 37.4 OHM RN55C 1%	XZ RN55C37R4F	
R042	A083795	001.00 EA	RESISTOR 37.4 OHM RN55C 1%	XZ RN55C37R4F	
R043	A178326	001.00 EA	RESISTOR 22.1 OHM 1/4W 1% 100PPM MTL FLM	5043ED22R10F	
R044	A178258	001.00 EA	RESISTOR 4.75K OHM 1/4W 1% 100PPM MTL FLM	5043ED4K750F	
R045	A178258	001.00 EA	RESISTOR 4.75K OHM 1/4W 1% 100PPM MTL FLM	5043ED4K750F	
R046	A178258	001.00 EA	RESISTOR 4.75K OHM 1/4W 1% 100PPM MTL FLM	5043ED4K750F	
R047	A178258	001.00 EA	RESISTOR 4.75K OHM 1/4W 1% 100PPM MTL FLM	5043ED4K750F	
R048	A178258	001.00 EA	RESISTOR 4.75K OHM 1/4W 1% 100PPM MTL FLM	5043ED4K750F	
R049	A178258	001.00 EA	RESISTOR 4.75K OHM 1/4W 1% 100PPM MTL FLM	5043ED4K750F	
R050	A178258	001.00 EA	RESISTOR 4.75K OHM 1/4W 1% 100PPM MTL FLM	5043ED4K750F	
R051	A178258	001.00 EA	RESISTOR 4.75K OHM 1/4W 1% 100PPM MTL FLM	5043ED4K750F	
R052	A178258	001.00 EA	RESISTOR 4.75K OHM 1/4W 1% 100PPM MTL FLM	5043ED4K750F	
R053	A178210	001.00 EA	RESISTOR 75.0 OHM 1/4W 1% 100PPM MTL FLM	5043ED75R00F	
R054	A178258	001.00 EA	RESISTOR 4.75K OHM 1/4W 1% 100PPM MTL FLM	5043ED4K750F	
R055	A178210	001.00 EA	RESISTOR 75.0 OHM 1/4W 1% 100PPM MTL FLM	5043ED75R00F	
R056	A178258	001.00 EA	RESISTOR 4.75K OHM 1/4W 1% 100PPM MTL FLM	5043ED4K750F	
R057	A178258	001.00 EA	RESISTOR 4.75K OHM 1/4W 1% 100PPM MTL FLM	5043ED4K750F	
R058	A178252	001.00 EA	RESISTOR 3.32K OHM 1/4W 1% 100PPM MTL FLM	5043ED3K320F	
R059	A178249	001.00 EA	RESISTOR 2.21K OHM 1/4W 1% 100PPM MTL FLM	5043ED2K210F	
R060	A178252	001.00 EA	RESISTOR 3.32K OHM 1/4W 1% 100PPM MTL FLM	5043ED3K320F	
R061	A178258	001.00 EA	RESISTOR 4.75K OHM 1/4W 1% 100PPM MTL FLM	5043ED4K750F	
R062	A178249	001.00 EA	RESISTOR 2.21K OHM 1/4W 1% 100PPM MTL FLM	5043ED2K210F	
R063	A178249	001.00 EA	RESISTOR 2.21K OHM 1/4W 1% 100PPM MTL FLM	5043ED2K210F	
R064	A174954	001.00 EA	RESISTOR 46.4K OHM 1/4W 1% MTL FLM	RN55C4642F	
R065	A178269	001.00 EA	RESISTOR 40.2K OHM 1/4W 1% 100PPM MTL FLM	5043ED40K20F	
R066	A178249	001.00 EA	RESISTOR 2.21K OHM 1/4W 1% 100PPM MTL FLM	5043ED2K210F	
R067	A178241	001.00 EA	RESISTOR 1.00K OHM 1/4W 1% 100PPM MTL FLM	5043ED1K000F	
R068	A178241	001.00 EA	RESISTOR 1.00K OHM 1/4W 1% 100PPM MTL FLM	5043ED1K000F	
R069	A178252	001.00 EA	RESISTOR 3.32K OHM 1/4W 1% 100PPM MTL FLM	5043ED3K320F	
R070	A178241	001.00 EA	RESISTOR 1.00K OHM 1/4W 1% 100PPM MTL FLM	5043ED1K000F	
R071	A174949	001.00 EA	RESISTOR 10.0K OHM 1/4W 1% MTL FLM	CCF-551002F	
R072	A178258	001.00 EA	RESISTOR 4.75K OHM 1/4W 1% 100PPM MTL FLM	5043ED4K750F	
R073	A087841	001.00 EA	POT 20K OHM 1/2W CER 3/8 SQ VERT ADJ 25T	3299W-1-203	
R074	A174000	000.00 EA	NOT USED ON THIS ASSEMBLY		
R075	A178248	001.00 EA	RESISTOR 2.00K OHM 1/4W 1% 100PPM MTL FLM	5043ED2K000F	
R076	A087838	001.00 EA	POT 2K OHM 1/2W CER 3/8 SQ VERT ADJ 25T	3299W-1-202	BOUR
R077	A178241	001.00 EA	RESISTOR 1.00K OHM 1/4W 1% 100PPM MTL FLM	5043ED1K000F	
R078	A178268	001.00 EA	RESISTOR 36.5K OHM 1/4W 1% 100PPM MTL FLM	5043ED36K50F	
R079	A178326	001.00 EA	RESISTOR 22.1 OHM 1/4W 1% 100PPM MTL FLM	5043ED22R10F	
R080	A178249	001.00 EA	RESISTOR 2.21K OHM 1/4W 1% 100PPM MTL FLM	5043ED2K210F	
R081	A178265	001.00 EA	RESISTOR 12.7K OHM 1.4W 1% 100PPM MTL FLM	5043ED12K70F	
R082	A174000	000.00 EA	NOT USED ON THIS ASSEMBLY		
R083	A178326	001.00 EA	RESISTOR 22.1 OHM 1/4W 1% 100PPM MTL FLM	5043ED22R10F	
R084	A178249	001.00 EA	RESISTOR 2.21K OHM 1/4W 1% 100PPM MTL FLM	5043ED2K210F	
R085	A178308	001.00 EA	RESISTOR 22.1K OHM 1/4W 1% 100PPM MTL FLM	5043ED22K10F	
R086	A178334	001.00 EA	RESISTOR 31.6 OHM 1/4W 1% 100PPM MTL FLM	5043ED31R60F	
R087	A083795	001.00 EA	RESISTOR 37.4 OHM RN55C 1%	XZ RN55C37R4F	
R088	A083795	001.00 EA	RESISTOR 37.4 OHM RN55C 1%	XZ RN55C37R4F	
R089	A178326	001.00 EA	RESISTOR 22.1 OHM 1/4W 1% 100PPM MTL FLM	5043ED22R10F	
R090	A178210	001.00 EA	RESISTOR 75.0 OHM 1/4W 1% 100PPM MTL FLM	5043ED75R00F	
R091	A174000	000.00 EA	NOT USED ON THIS ASSEMBLY		
R092	A178210	001.00 EA	RESISTOR 75.0 OHM 1/4W 1% 100PPM MTL FLM	5043ED75R00F	
R093	A174000	000.00 EA	NOT USED ON THIS ASSEMBLY		
R094	A178306	001.00 EA	RESISTOR 17.8K OHM 1/4W 1% 100PPM MTL FLM	5043ED17K80F	

A456211 SUB-ASSY DS1 2X2 A456211

Revision B
Effective: September 26, 1991

REF	SA PART	Qty	Description	Mfr Part	CAGE
R095	A178221	001.00 EA	RESISTOR 150 OHM 1/4W 1% 100PPM MTL FLM	5043ED150R0F	
R096	A078600	000.00 FT	NOT ASSIGNED	FOR ENG ONLY	
R097	A178252	001.00 EA	RESISTOR 3.32K OHM 1/4W 1% 100PPM MTL FLM	5043ED3K320F	
R098	A178210	001.00 EA	RESISTOR 75.0 OHM 1/4W 1% 100PPM MTL FLM	5043ED75R00F	
R099	A174000	000.00 EA	NOT USED ON THIS ASSEMBLY		
R100	A087839	001.00 EA	POT 5K OHM 1/2 CER 3/8 SQ VERT ADJ 25T	3299W-1-502	
R101	A174000	000.00 EA	NOT USED ON THIS ASSEMBLY		
R102	A178258	001.00 EA	RESISTOR 4.75K OHM 1/4W 1% 100PPM MTL FLM	5043ED4K750F	
R103	A178258	001.00 EA	RESISTOR 4.75K OHM 1/4W 1% 100PPM MTL FLM	5043ED4K750F	
R104	A178310	001.00 EA	RESISTOR 10 OHM 1/4W 1% 100PPM MTL FLM	5043ED10R00F	
R105	A178258	001.00 EA	RESISTOR 4.75K OHM 1/4W 1% 100PPM MTL FLM	5043ED4K750F	
R106	A178249	001.00 EA	RESISTOR 2.21K OHM 1/4W 1% 100PPM MTL FLM	5043ED2K210F	
R107	A178258	001.00 EA	RESISTOR 4.75K OHM 1/4W 1% 100PPM MTL FLM	5043ED4K750F	
R108	A178258	001.00 EA	RESISTOR 4.75K OHM 1/4W 1% 100PPM MTL FLM	5043ED4K750F	
R109	A178308	001.00 EA	RESISTOR 22.1K OHM 1/4W 1% 100PPM MTL FLM	5043ED22K10F	
R110	A178258	001.00 EA	RESISTOR 4.75K OHM 1/4W 1% 100PPM MTL FLM	5043ED4K750F	
R111	A178247	001.00 EA	RESISTOR 1.50K OHM 1/4W 1% 100PPM MTL FLM	5043ED1K500F	
R112	A178227	001.00 EA	RESISTOR 221 OHM 1/4W 1% 100PPM MTL FLM	5043ED221R0F	
R113	A178227	001.00 EA	RESISTOR 221 OHM 1/4W 1% 100PPM MTL FLM	5043ED221R0F	
R114	A178271	001.00 EA	RESISTOR 100K OHM 1/4W 1% 100PPM MTL FLM	5043ED100K0F	
R115	A178279	001.00 EA	RESISTOR 1.0M OHM 1/4W 1% 100PPM MTL FLM	5043ED1M000F	
R116	A178271	001.00 EA	RESISTOR 100K OHM 1/4W 1% 100PPM MTL FLM	5043ED100K0F	
R117	A178279	001.00 EA	RESISTOR 1.0M OHM 1/4W 1% 100PPM MTL FLM	5043ED1M000F	
R118	A178215	001.00 EA	RESISTOR 100 OHM 1/4W 1% 100PPM MTL FLM	5043ED100R0F	
R119	A178215	001.00 EA	RESISTOR 100 OHM 1/4W 1% 100PPM MTL FLM	5043ED100R0F	
TP001	A317164	001.00 EA	TEST POINT .100 CENTER	CMP #TP101-10	
TP002	A317164	001.00 EA	TEST POINT .100 CENTER	CMP #TP101-10	
TP003	A317164	001.00 EA	TEST POINT .100 CENTER	CMP #TP101-10	
TP004	A317164	001.00 EA	TEST POINT .100 CENTER	CMP #TP101-10	
T001	A177027	001.00 EA	XFMR 1;1.37CT PRI L 680UH	2745C	
T002	A177027	001.00 EA	XFMR 1;1.37CT PRI L 680UH	2745C	
T003	A177027	001.00 EA	XFMR 1;1.37CT PRI L 680UH	2745C	
T004	A177027	001.00 EA	XFMR 1;1.37CT PRI L 680UH	2745C	
U001	A177252	001.00 EA	IC CMOS CNTR 8-BIT BINARY	TI SN74HC590AN	
U002	A177252	001.00 EA	IC CMOS CNTR 8-BIT BINARY	TI SN74HC590AN	
U003	A457040	001.00 EA	IC FRAMER 2	VLSI PER SA DWG 457	
U004	A327878	001.00 EA	IC PATTERN GENERATOR	LSI ASIC #LIA3381-MC	
U005	A457040	001.00 EA	IC FRAMER 2	VLSI PER SA DWG 457	
U006	A327876	001.00 EA	IC CLOCK REC DIGITAL	LSI LIA3382-MC	
U007	A172179	001.00 EA	IC COMPARATOR - VOLTAGE 8L - DIP DUAL	LM393N	
U008	A327875	001.00 EA	IC DS1/1C/2/3 ANALOG CLOCK REC	NSC ACK REC	
U009	A177252	001.00 EA	IC CMOS CNTR 8-BIT BINARY	TI SN74HC590AN	
U010	A173221	001.00 EA	IC CMOS GATE NAND 2-IN QUAD	NSC MM74HC00N	
U011	A177252	001.00 EA	IC CMOS CNTR 8-BIT BINARY	TI SN74HC590AN	
U012	A174227	001.00 EA	IC CMOS LATCH 8-BIT ADDRESSABLE	CD74HC259E	
U013	A457040	001.00 EA	IC FRAMER 2	VLSI PER SA DWG 457	
U014	A327878	001.00 EA	IC PATTERN GENERATOR	LSI ASIC #LIA3381-MC	
U015	A457040	001.00 EA	IC FRAMER 2	VLSI PER SA DWG 457	
U016	A327876	001.00 EA	IC CLOCK REC DIGITAL	LSI LIA3382-MC	
U017	A086514	001.00 EA	IC OP AMP JFET 8L-DIP 70C COMP DUAL	TL082ACP	
U018	A327875	001.00 EA	IC DS1/1C/2/3 ANALOG CLOCK REC	NSC ACK REC	
U019	A177395	001.00 EA	IC CMOS MUX DUAL 4LINE TO 1 3S	TI 74AC 11253N	
U020	A177395	001.00 EA	IC CMOS MUX DUAL 4LINE TO 1 3S	TI 74AC 11253N	
U021	A173221	001.00 EA	IC CMOS GATE NAND 2-IN QUAD	NSC MM74HC00N	

A456211 SUB-ASSY DS1 2X2 A456211

Revision B
Effective: September 26, 1991

REF	SA PART	Qty	Description	Mfr Part	CAGE
U022	A172465	001.00 EA	IC CMOS COUNTER 4-BIT BINARY	MOT MC74HC393N	
U023	A252731	001.00 EA	OSCLTR CLOCK 6.176MHZ MDL 9500	03-02003-001	
U024	A081658	001.00 EA	IC TTL BUFFER HEX OPEN-COL	SGN SN7407N	
U025	A084000	000.00 EA	VARIES WITH MODEL,SEE HIGHER ASSY FOR PN	PER S A DWG	
U026	A084000	000.00 EA	VARIES WITH MODEL,SEE HIGHER ASSY FOR PN	PER S A DWG	
U027	A084000	000.00 EA	VARIES WITH MODEL,SEE HIGHER ASSY FOR PN	PER S A DWG	
U028	A172455	001.00 EA	IC CMOS GATE AND 2-IN QUAD 14L-DIP	MM74HC08N	
U029	A177003	001.00 EA	IC CMOS TRANSCVR BUS 10-BIT	AM29C861APC	
U030	A177003	001.00 EA	IC CMOS TRANSCVR BUS 10-BIT	AM29C861APC	
U031	A084000	000.00 EA	VARIES WITH MODEL,SEE HIGHER ASSY FOR PN	PER S A DWG	
U032	A178541	001.00 EA	IC CMOS BUFFER/LINE DR 10-BIT	AMD #AM 29C 827APC	
U033	A178541	001.00 EA	IC CMOS BUFFER/LINE DR 10-BIT	AMD #AM 29C 827APC	
U034	A084000	000.00 EA	VARIES WITH MODEL,SEE HIGHER ASSY FOR PN	PER S A DWG	
U035	A084000	000.00 EA	VARIES WITH MODEL,SEE HIGHER ASSY FOR PN	PER S A DWG	
U036	A330210	001.00 EA	IC CMOS FLIP-FLOP TYPE-D	MOS MC74HC374N	
XU003	A177011	001.00 EA	SOCKET 68 POS PLCC PC MT	PLCC-68-P-T	
XU004	A177011	001.00 EA	SOCKET 68 POS PLCC PC MT	PLCC-68-P-T	
XU005	A177011	001.00 EA	SOCKET 68 POS PLCC PC MT	PLCC-68-P-T	
XU006	A177011	001.00 EA	SOCKET 68 POS PLCC PC MT	PLCC-68-P-T	
XU008	A177092	001.00 EA	SOCKET 44 POS PLCC PC MT	PLCC-44-P-T	
XU013	A177011	001.00 EA	SOCKET 68 POS PLCC PC MT	PLCC-68-P-T	
XU014	A177011	001.00 EA	SOCKET 68 POS PLCC PC MT	PLCC-68-P-T	
XU015	A177011	001.00 EA	SOCKET 68 POS PLCC PC MT	PLCC-68-P-T	
XU016	A177011	001.00 EA	SOCKET 68 POS PLCC PC MT	PLCC-68-P-T	
XU018	A177092	001.00 EA	SOCKET 44 POS PLCC PC MT	PLCC-44-P-T	
XU025	A173737	001.00 EA	SOCKET 24 PIN DIP PC MT LOW PROFILE OPEN UL94V	610-24-CC-D	
XU026	A173737	001.00 EA	SOCKET 24 PIN DIP PC MT LOW PROFILE OPEN UL94V	610-24-CC-D	
XU027	A173737	001.00 EA	SOCKET 24 PIN DIP PC MT LOW PROFILE OPEN UL94V	610-24-CC-D	
XU029	A173737	001.00 EA	SOCKET 24 PIN DIP PC MT LOW PROFILE OPEN UL94V	610-24-CC-D	
XU030	A173737	001.00 EA	SOCKET 24 PIN DIP PC MT LOW PROFILE OPEN UL94V	610-24-CC-D	
XU031	A173737	001.00 EA	SOCKET 24 PIN DIP PC MT LOW PROFILE OPEN UL94V	610-24-CC-D	
XU032	A173737	001.00 EA	SOCKET 24 PIN DIP PC MT LOW PROFILE OPEN UL94V	610-24-CC-D	
XU033	A173737	001.00 EA	SOCKET 24 PIN DIP PC MT LOW PROFILE OPEN UL94V	610-24-CC-D	
XU034	A177349	001.00 EA	SOCKET 32-PIN DIP .6W PC MT	ICT-326-S-TG	
XU035	A177349	001.00 EA	SOCKET 32-PIN DIP .6W PC MT	ICT-326-S-TG	
XU036	A086897	001.00 EA	SOCKET 20 PIN DIP PC MT	RBN ICT-203-S-TG	
Z001	A327944	001.00 EA	HYBRID 100 OHM DS1 OUTPUT	PER SA DWG.	
Z002	A327944	001.00 EA	HYBRID 100 OHM DS1 OUTPUT	PER SA DWG.	
000	A456209	000.00 EA	SCHEMATIC DS1 2X2		
001	A458331	001.00 EA	PWB DS1 2X2	PER SA DWG. 458331 O	
002	A082463	001.00 EA	EXTRACTOR PC BOARD	THC 5005-08N	
003	A317056	001.00 EA	DUAL IN-LINE PAD	814-045	

A456212 ASSY PWB DS1 2X2 A456212

Revision E
Effective: June 13, 1991

REF	SA PART	Qty	Description	Mfr Part	CAGE
U025	A456215	001.00 EA	ASSY PAL PROGRAM U25 DS1 2X2	PER SA DWG 456215	10110
U026	A456213	001.00 EA	ASSY PAL PROGRAM U26 DS1 2X2		
U027	A458416	001.00 EA	ASSY PAL PROGRAM U27 DS1 2X2	PER SA DWG 458416	10110
U031	A456216	001.00 EA	ASSY PAL PROGRAM U31 DS1 2X2	PER SA DWG 456216	10110
001	A456211	001.00 EA	SUB-ASSY DS1 2X2		
002	M449216	001.00 EA	EPROM ASSEMBLY, 2 X 2 DS1 9000	PER SA DWG 449216	42061
003	A456975	001.00 EA	BRACKET BOARD LEGEND-2X2 DS1	PER SA DWG.	
005	A177365	002.00 EA	SPACER NO.4 ID 1/4 OD 3/32L NI	UNICORP S-503-M01-F0	
006	A071494	002.00 EA	NUT 4-40 UNC-2B,PLAIN-HEX,SST	PER MS35649-244	
007	A072321	002.00 EA	SCREW 4-40 X 3/8 F HD,82 DEG,SST	ATY 72321	
008	A073266	002.00 EA	WASHER-NO. 4- .125 .250 .022 AUS SST	PER ANSI B.18.22.1	
009	A073265	002.00 EA	WASHER NO. 4 LOCK EXT TOOTH CAD PLT STL	PER MS35335-29	96906

A456224 SUB-ASSY DS1 2-POINT MONITOR A456224

Revision B
Effective: September 26, 1991

REF	SA PART	Qty	Description	Mfr Part	CAGE
	A456223	000.00 EA	SCHEMATIC DS1 2-POINT MONITOR		
BB001	A177102	001.00 EA	BUS DISTRBTN 2-LYR VERT MT 36-PIN IN-LINE	RAZ QV-2 17.6.3 (.1)	
BB002	A177102	001.00 EA	BUS DISTRBTN 2-LYR VERT MT 36-PIN IN-LINE	RAZ QV-2 17.6.3 (.1)	
CR001	A071122	001.00 EA	DIODE 1N914 SIL 75V 75MA	1N914	
CR002	A071122	001.00 EA	DIODE 1N914 SIL 75V 75MA	1N914	
CR003	A071122	001.00 EA	DIODE 1N914 SIL 75V 75MA	1N914	
CR004	A071122	001.00 EA	DIODE 1N914 SIL 75V 75MA	1N914	
C001	A080139	001.00 EA	CAPACITR .1 MF 50V CER MONO -20%/+80%	RPE122Z5U104Z050V	
C002	A080139	001.00 EA	CAPACITR .1 MF 50V CER MONO -20%/+80%	RPE122Z5U104Z050V	
C003	A081095	001.00 EA	CAPACITR 3.3 MF 50V CER MONO 20%	3C37Z5U335M050B	
C004	A080139	001.00 EA	CAPACITR .1 MF 50V CER MONO -20%/+80%	RPE122Z5U104Z050V	
C005	A176497	001.00 EA	CAP .01MF 50V CER MON 10% .2LS	RPE122X7R103K50V	
C006	A172707	001.00 EA	CAPACITR .068 MF 10% 50V CER MONO	RPE122X7R683K50V	
C007	A080139	001.00 EA	CAPACITR .1 MF 50V CER MONO -20%/+80%	RPE122Z5U104Z050V	
C008	A176497	001.00 EA	CAP .01MF 50V CER MON 10% .2LS	RPE122X7R103K50V	
C009	A070470	001.00 EA	CAPACITR 10 PF 500V SILVER MICA 5%	CD15CD100J03	
C010	A035656	001.00 EA	CAPACITR 100 MF 20V 10% SOLID TANT POL	T354M107K020AS	
C011	A080139	001.00 EA	CAPACITR .1 MF 50V CER MONO -20%/+80%	RPE122Z5U104Z050V	
C012	A081995	001.00 EA	CAPACITR .001 MF 100V CER MONO X7R 10% .1LS	RPE121X7R102K100V	
C013	A080139	001.00 EA	CAPACITR .1 MF 50V CER MONO -20%/+80%	RPE122Z5U104Z050V	
C014	A080139	001.00 EA	CAPACITR .1 MF 50V CER MONO -20%/+80%	RPE122Z5U104Z050V	
C015	A080139	001.00 EA	CAPACITR .1 MF 50V CER MONO -20%/+80%	RPE122Z5U104Z050V	
C016	A080139	001.00 EA	CAPACITR .1 MF 50V CER MONO -20%/+80%	RPE122Z5U104Z050V	
C017	A080139	001.00 EA	CAPACITR .1 MF 50V CER MONO -20%/+80%	RPE122Z5U104Z050V	
C018	A081808	001.00 EA	CAPACITR 2.2 MF 50V CER MONO 20%	RPE114Z5U225M50V	
C019	A035656	001.00 EA	CAPACITR 100 MF 20V 10% SOLID TANT POL	T354M107K020AS	
C020	A080139	001.00 EA	CAPACITR .1 MF 50V CER MONO -20%/+80%	RPE122Z5U104Z050V	
C021	A035656	001.00 EA	CAPACITR 100 MF 20V 10% SOLID TANT POL	T354M107K020AS	
C022	A080139	001.00 EA	CAPACITR .1 MF 50V CER MONO -20%/+80%	RPE122Z5U104Z050V	
C023	A081095	001.00 EA	CAPACITR 3.3 MF 50V CER MONO 20%	3C37Z5U335M050B	
C024	A080139	001.00 EA	CAPACITR .1 MF 50V CER MONO -20%/+80%	RPE122Z5U104Z050V	
C025	A080139	001.00 EA	CAPACITR .1 MF 50V CER MONO -20%/+80%	RPE122Z5U104Z050V	
C026	A176497	001.00 EA	CAP .01MF 50V CER MON 10% .2LS	RPE122X7R103K50V	
C027	A081095	001.00 EA	CAPACITR 3.3 MF 50V CER MONO 20%	3C37Z5U335M050B	
C028	A172707	001.00 EA	CAPACITR .068 MF 10% 50V CER MONO	RPE122X7R683K50V	
C029	A080139	001.00 EA	CAPACITR .1 MF 50V CER MONO -20%/+80%	RPE122Z5U104Z050V	
C030	A176497	001.00 EA	CAP .01MF 50V CER MON 10% .2LS	RPE122X7R103K50V	
C031	A070470	001.00 EA	CAPACITR 10 PF 500V SILVER MICA 5%	CD15CD100J03	
C032	A035656	001.00 EA	CAPACITR 100 MF 20V 10% SOLID TANT POL	T354M107K020AS	
C033	A080139	001.00 EA	CAPACITR .1 MF 50V CER MONO -20%/+80%	RPE122Z5U104Z050V	
C034	A081995	001.00 EA	CAPACITR .001 MF 100V CER MONO X7R 10% .1LS	RPE121X7R102K100V	
C035	A080139	001.00 EA	CAPACITR .1 MF 50V CER MONO -20%/+80%	RPE122Z5U104Z050V	
C036	A080139	001.00 EA	CAPACITR .1 MF 50V CER MONO -20%/+80%	RPE122Z5U104Z050V	
C037	A080139	001.00 EA	CAPACITR .1 MF 50V CER MONO -20%/+80%	RPE122Z5U104Z050V	
C038	A080139	001.00 EA	CAPACITR .1 MF 50V CER MONO -20%/+80%	RPE122Z5U104Z050V	
C039	A080139	001.00 EA	CAPACITR .1 MF 50V CER MONO -20%/+80%	RPE122Z5U104Z050V	
C040	A081808	001.00 EA	CAPACITR 2.2 MF 50V CER MONO 20%	RPE114Z5U225M50V	
C041	A035656	001.00 EA	CAPACITR 100 MF 20V 10% SOLID TANT POL	T354M107K020AS	
C042	A080139	001.00 EA	CAPACITR .1 MF 50V CER MONO -20%/+80%	RPE122Z5U104Z050V	
C043	A035656	001.00 EA	CAPACITR 100 MF 20V 10% SOLID TANT POL	T354M107K020AS	
C044	A080139	001.00 EA	CAPACITR .1 MF 50V CER MONO -20%/+80%	RPE122Z5U104Z050V	
C045	A174000	000.00 EA	NOT USED ON THIS ASSEMBLY		
C046	A174000	000.00 EA	NOT USED ON THIS ASSEMBLY		
C047	A174000	000.00 EA	NOT USED ON THIS ASSEMBLY		
C048	A174000	000.00 EA	NOT USED ON THIS ASSEMBLY		

A456224 SUB-ASSY DS1 2-POINT MONITOR A456224

Revision B
Effective: September 26, 1991

REF	SA PART	Qty	Description	Mfr Part	CAGE
C049	A174000	000.00 EA	NOT USED ON THIS ASSEMBLY		
C050	A174000	000.00 EA	NOT USED ON THIS ASSEMBLY		
C051	A174000	000.00 EA	NOT USED ON THIS ASSEMBLY		
C052	A174000	000.00 EA	NOT USED ON THIS ASSEMBLY		
C053	A080139	001.00 EA	CAPACITR .1 MF 50V CER MONO -20%/+80%	RPE122Z5U104Z050V	
C054	A174000	000.00 EA	NOT USED ON THIS ASSEMBLY		
C055	A080139	001.00 EA	CAPACITR .1 MF 50V CER MONO -20%/+80%	RPE122Z5U104Z050V	
C056	A174000	000.00 EA	NOT USED ON THIS ASSEMBLY		
C057	A035656	001.00 EA	CAPACITR 100 MF 20V 10% SOLID TANT POL	T354M107K020AS	
C058	A080139	001.00 EA	CAPACITR .1 MF 50V CER MONO -20%/+80%	RPE122Z5U104Z050V	
C059	A035656	001.00 EA	CAPACITR 100 MF 20V 10% SOLID TANT POL	T354M107K020AS	
C060	A080139	001.00 EA	CAPACITR .1 MF 50V CER MONO -20%/+80%	RPE122Z5U104Z050V	
C061	A083258	001.00 EA	CAPACITR CHIP .1 MF 50V	C1812C104M5XAH	
C062	A083258	001.00 EA	CAPACITR CHIP .1 MF 50V	C1812C104M5XAH	
C063	A083258	001.00 EA	CAPACITR CHIP .1 MF 50V	C1812C104M5XAH	
C064	A083258	001.00 EA	CAPACITR CHIP .1 MF 50V	C1812C104M5XAH	
C065	A083258	001.00 EA	CAPACITR CHIP .1 MF 50V	C1812C104M5XAH	
C066	A083258	001.00 EA	CAPACITR CHIP .1 MF 50V	C1812C104M5XAH	
C067	A083258	001.00 EA	CAPACITR CHIP .1 MF 50V	C1812C104M5XAH	
C068	A083258	001.00 EA	CAPACITR CHIP .1 MF 50V	C1812C104M5XAH	
C069	A083258	001.00 EA	CAPACITR CHIP .1 MF 50V	C1812C104M5XAH	
C070	A083258	001.00 EA	CAPACITR CHIP .1 MF 50V	C1812C104M5XAH	
C071	A173733	001.00 EA	CAPACITR IC BYPASS FOR .3W 24L-DIP .03MF	303Z2A	
C072	A173733	001.00 EA	CAPACITR IC BYPASS FOR .3W 24L-DIP .03MF	303Z2A	
C073	A174000	000.00 EA	NOT USED ON THIS ASSEMBLY		
C074	A080139	001.00 EA	CAPACITR .1 MF 50V CER MONO -20%/+80%	RPE122Z5U104Z050V	
C075	A084223	001.00 EA	CAPACITR .047 MF 100V CER MONO X7R 10%	RPE122X7R473K100V	
C076	A080139	001.00 EA	CAPACITR .1 MF 50V CER MONO -20%/+80%	RPE122Z5U104Z050V	
C077	A084223	001.00 EA	CAPACITR .047 MF 100V CER MONO X7R 10%	RPE122X7R473K100V	
DS001	A177211	001.00 EA	LAMP LED-RSTR RED PC MT 5V 3MA	555-2007	
DS002	A177211	001.00 EA	LAMP LED-RSTR RED PC MT 5V 3MA	555-2007	
DS003	A177211	001.00 EA	LAMP LED-RSTR RED PC MT 5V 3MA	555-2007	
DS004	A177211	001.00 EA	LAMP LED-RSTR RED PC MT 5V 3MA	555-2007	
E017	A177971	001.00 EA	CHOKE WIDE-BAND 3B .236X394L	VK20009-3B	
J001	A174000	000.00 EA	NOT USED ON THIS ASSEMBLY		
J002	A175564	001.00 EA	CONN HEADER SGL ROW STRAIGHT 3-PIN .09H PC MT	929805-01-03-30	
J003	A174000	000.00 EA	NOT USED ON THIS ASSEMBLY		
J004	A174000	000.00 EA	NOT USED ON THIS ASSEMBLY		
J005	A307232	001.00 EA	JACK PHONE 3-COND T-R AU RTANG	PER SA DWG.	
J006	A174000	000.00 EA	NOT USED ON THIS ASSEMBLY		
J007	A174000	000.00 EA	NOT USED ON THIS ASSEMBLY		
J008	A175564	001.00 EA	CONN HEADER SGL ROW STRAIGHT 3-PIN .09H PC MT	929805-01-03-30	
J009	A174000	000.00 EA	NOT USED ON THIS ASSEMBLY		
J010	A174000	000.00 EA	NOT USED ON THIS ASSEMBLY		
J011	A307232	001.00 EA	JACK PHONE 3-COND T-R AU RTANG	PER SA DWG.	
J012	A174000	000.00 EA	NOT USED ON THIS ASSEMBLY		
J013	A174000	000.00 EA	NOT USED ON THIS ASSEMBLY		
J014	A174000	000.00 EA	NOT USED ON THIS ASSEMBLY		
J015	A173712	001.00 EA	CONN RECT 96-COND MALE PNL MT RT ANG PC MT	532505-1	00779
J016	A174000	000.00 EA	NOT USED ON THIS ASSEMBLY		
J017	A174000	000.00 EA	NOT USED ON THIS ASSEMBLY		
J018	A173712	001.00 EA	CONN RECT 96-COND MALE PNL MT RT ANG PC MT	532505-1	00779
J020	A174000	000.00 EA	NOT USED ON THIS ASSEMBLY		
J021	A087229	001.00 EA	CONN HEADER SGL ROW STRAIGHT 2-PIN PC MT	87220-2	00779

A456224 SUB-ASSY DS1 2-POINT MONITOR A456224

Revision B
Effective: September 26, 1991

REF	SA PART	Qty	Description	Mfr Part	CAGE
J022	A087229	001.00 EA	CONN HEADER SGL ROW STRAIGHT 2-PIN PC MT	87220-2	00779
J023	A087229	001.00 EA	CONN HEADER SGL ROW STRAIGHT 2-PIN PC MT	87220-2	00779
J024	A087229	001.00 EA	CONN HEADER SGL ROW STRAIGHT 2-PIN PC MT	87220-2	00779
L001	A078716	001.00 EA	INDUCTOR 100 UH SUBMIN UNSHLD 10%	IR-2 100UH	
L002	A078716	001.00 EA	INDUCTOR 100 UH SUBMIN UNSHLD 10%	IR-2 100UH	
L003	A078716	001.00 EA	INDUCTOR 100 UH SUBMIN UNSHLD 10%	IR-2 100UH	
L004	A078716	001.00 EA	INDUCTOR 100 UH SUBMIN UNSHLD 10%	IR-2 100UH	
L005	A078716	001.00 EA	INDUCTOR 100 UH SUBMIN UNSHLD 10%	IR-2 100UH	
L006	A078716	001.00 EA	INDUCTOR 100 UH SUBMIN UNSHLD 10%	IR-2 100UH	
P002	A175566	001.00 EA	JUMPER FOR .09H HDR 2-PIN FEM	87092-3012	
P008	A175566	001.00 EA	JUMPER FOR .09H HDR 2-PIN FEM	87092-3012	
Q001	A079660	001.00 EA	TRANSSTR 2N4093 FET N-CHNL JUNC	2N4093	
Q002	A079660	001.00 EA	TRANSSTR 2N4093 FET N-CHNL JUNC	2N4093	
Q003	A174000	000.00 EA	NOT USED ON THIS ASSEMBLY		
R001	A174000	000.00 EA	NOT USED ON THIS ASSEMBLY		
R002	A178258	001.00 EA	RESISTOR 4.75K OHM 1/4W 1% 100PPM MTL FLM	5043ED4K750F	
R003	A178258	001.00 EA	RESISTOR 4.75K OHM 1/4W 1% 100PPM MTL FLM	5043ED4K750F	
R004	A174000	000.00 EA	NOT USED ON THIS ASSEMBLY		
R005	A178258	001.00 EA	RESISTOR 4.75K OHM 1/4W 1% 100PPM MTL FLM	5043ED4K750F	
R006	A178258	001.00 EA	RESISTOR 4.75K OHM 1/4W 1% 100PPM MTL FLM	5043ED4K750F	
R007	A178258	001.00 EA	RESISTOR 4.75K OHM 1/4W 1% 100PPM MTL FLM	5043ED4K750F	
R008	A178258	001.00 EA	RESISTOR 4.75K OHM 1/4W 1% 100PPM MTL FLM	5043ED4K750F	
R009	A178258	001.00 EA	RESISTOR 4.75K OHM 1/4W 1% 100PPM MTL FLM	5043ED4K750F	
R010	A178258	001.00 EA	RESISTOR 4.75K OHM 1/4W 1% 100PPM MTL FLM	5043ED4K750F	
R011	A174000	000.00 EA	NOT USED ON THIS ASSEMBLY		
R012	A178258	001.00 EA	RESISTOR 4.75K OHM 1/4W 1% 100PPM MTL FLM	5043ED4K750F	
R013	A178210	001.00 EA	RESISTOR 75.0 OHM 1/4W 1% 100PPM MTL FLM	5043ED75R00F	
R014	A178258	001.00 EA	RESISTOR 4.75K OHM 1/4W 1% 100PPM MTL FLM	5043ED4K750F	
R015	A178258	001.00 EA	RESISTOR 4.75K OHM 1/4W 1% 100PPM MTL FLM	5043ED4K750F	
R016	A178241	001.00 EA	RESISTOR 1.00K OHM 1/4W 1% 100PPM MTL FLM	5043ED1K000F	
R017	A178252	001.00 EA	RESISTOR 3.32K OHM 1/4W 1% 100PPM MTL FLM	5043ED3K320F	
R018	A174954	001.00 EA	RESISTOR 46.4K OHM 1/4W 1% MTL FLM	RN55C4642F	
R019	A178269	001.00 EA	RESISTOR 40.2K OHM 1/4W 1% 100PPM MTL FLM	5043ED40K20F	
R020	A174954	001.00 EA	RESISTOR 46.4K OHM 1/4W 1% MTL FLM	RN55C4642F	
R021	A174954	001.00 EA	RESISTOR 46.4K OHM 1/4W 1% MTL FLM	RN55C4642F	
R022	A178241	001.00 EA	RESISTOR 1.00K OHM 1/4W 1% 100PPM MTL FLM	5043ED1K000F	
R023	A178252	001.00 EA	RESISTOR 3.32K OHM 1/4W 1% 100PPM MTL FLM	5043ED3K320F	
R024	A178241	001.00 EA	RESISTOR 1.00K OHM 1/4W 1% 100PPM MTL FLM	5043ED1K000F	
R025	A178258	001.00 EA	RESISTOR 4.75K OHM 1/4W 1% 100PPM MTL FLM	5043ED4K750F	
R026	A174949	001.00 EA	RESISTOR 10.0K OHM 1/4W 1% MTL FLM	CCF-551002F	
R027	A087841	001.00 EA	POT 20K OHM 1/2W CER 3/8 SQ VERT ADJ 25T	3299W-1-203	
R028	A174000	000.00 EA	NOT USED ON THIS ASSEMBLY		
R029	A178248	001.00 EA	RESISTOR 2.00K OHM 1/4W 1% 100PPM MTL FLM	5043ED2K000F	
R030	A087838	001.00 EA	POT 2K OHM 1/2W CER 3/8 SQ VERT ADJ 25T	3299W-1-202	BOUR
R031	A178241	001.00 EA	RESISTOR 1.00K OHM 1/4W 1% 100PPM MTL FLM	5043ED1K000F	
R032	A178268	001.00 EA	RESISTOR 36.5K OHM 1/4W 1% 100PPM MTL FLM	5043ED36K50F	
R033	A178326	001.00 EA	RESISTOR 22.1 OHM 1/4W 1% 100PPM MTL FLM	5043ED22R10F	
R034	A178249	001.00 EA	RESISTOR 2.21K OHM 1/4W 1% 100PPM MTL FLM	5043ED2K210F	
R035	A178265	001.00 EA	RESISTOR 12.7K OHM 1.4W 1% 100PPM MTL FLM	5043ED12K70F	
R036	A174000	000.00 EA	NOT USED ON THIS ASSEMBLY		
R037	A178326	001.00 EA	RESISTOR 22.1 OHM 1/4W 1% 100PPM MTL FLM	5043ED22R10F	
R038	A178249	001.00 EA	RESISTOR 2.21K OHM 1/4W 1% 100PPM MTL FLM	5043ED2K210F	
R039	A178308	001.00 EA	RESISTOR 22.1K OHM 1/4W 1% 100PPM MTL FLM	5043ED22K10F	
R040	A178334	001.00 EA	RESISTOR 31.6 OHM 1/4W 1% 100PPM MTL FLM	5043ED31R60F	

A456224 SUB-ASSY DS1 2-POINT MONITOR A456224

Revision B
Effective: September 26, 1991

REF	SA PART	Qty	Description	Mfr Part	CAGE
R041	A083795	001.00 EA	RESISTOR 37.4 OHM RN55C 1%	XZ RN55C37R4F	
R042	A083795	001.00 EA	RESISTOR 37.4 OHM RN55C 1%	XZ RN55C37R4F	
R043	A178326	001.00 EA	RESISTOR 22.1 OHM 1/4W 1% 100PPM MTL FLM	5043ED22R10F	
R044	A178258	001.00 EA	RESISTOR 4.75K OHM 1/4W 1% 100PPM MTL FLM	5043ED4K750F	
R045	A174000	000.00 EA	NOT USED ON THIS ASSEMBLY		
R046	A178258	001.00 EA	RESISTOR 4.75K OHM 1/4W 1% 100PPM MTL FLM	5043ED4K750F	
R047	A174000	000.00 EA	NOT USED ON THIS ASSEMBLY		
R048	A178258	001.00 EA	RESISTOR 4.75K OHM 1/4W 1% 100PPM MTL FLM	5043ED4K750F	
R049	A178258	001.00 EA	RESISTOR 4.75K OHM 1/4W 1% 100PPM MTL FLM	5043ED4K750F	
R050	A178258	001.00 EA	RESISTOR 4.75K OHM 1/4W 1% 100PPM MTL FLM	5043ED4K750F	
R051	A178258	001.00 EA	RESISTOR 4.75K OHM 1/4W 1% 100PPM MTL FLM	5043ED4K750F	
R052	A178258	001.00 EA	RESISTOR 4.75K OHM 1/4W 1% 100PPM MTL FLM	5043ED4K750F	
R053	A174000	000.00 EA	NOT USED ON THIS ASSEMBLY		
R054	A178258	001.00 EA	RESISTOR 4.75K OHM 1/4W 1% 100PPM MTL FLM	5043ED4K750F	
R055	A178210	001.00 EA	RESISTOR 75.0 OHM 1/4W 1% 100PPM MTL FLM	5043ED75R00F	
R056	A178258	001.00 EA	RESISTOR 4.75K OHM 1/4W 1% 100PPM MTL FLM	5043ED4K750F	
R057	A178258	001.00 EA	RESISTOR 4.75K OHM 1/4W 1% 100PPM MTL FLM	5043ED4K750F	
R058	A178252	001.00 EA	RESISTOR 3.32K OHM 1/4W 1% 100PPM MTL FLM	5043ED3K320F	
R059	A178249	001.00 EA	RESISTOR 2.21K OHM 1/4W 1% 100PPM MTL FLM	5043ED2K210F	
R060	A178252	001.00 EA	RESISTOR 3.32K OHM 1/4W 1% 100PPM MTL FLM	5043ED3K320F	
R061	A178258	001.00 EA	RESISTOR 4.75K OHM 1/4W 1% 100PPM MTL FLM	5043ED4K750F	
R062	A178249	001.00 EA	RESISTOR 2.21K OHM 1/4W 1% 100PPM MTL FLM	5043ED2K210F	
R063	A178249	001.00 EA	RESISTOR 2.21K OHM 1/4W 1% 100PPM MTL FLM	5043ED2K210F	
R064	A174954	001.00 EA	RESISTOR 46.4K OHM 1/4W 1% MTL FLM	RN55C4642F	
R065	A178269	001.00 EA	RESISTOR 40.2K OHM 1/4W 1% 100PPM MTL FLM	5043ED40K20F	
R066	A178249	001.00 EA	RESISTOR 2.21K OHM 1/4W 1% 100PPM MTL FLM	5043ED2K210F	
R067	A178241	001.00 EA	RESISTOR 1.00K OHM 1/4W 1% 100PPM MTL FLM	5043ED1K000F	
R068	A178241	001.00 EA	RESISTOR 1.00K OHM 1/4W 1% 100PPM MTL FLM	5043ED1K000F	
R069	A178252	001.00 EA	RESISTOR 3.32K OHM 1/4W 1% 100PPM MTL FLM	5043ED3K320F	
R070	A178241	001.00 EA	RESISTOR 1.00K OHM 1/4W 1% 100PPM MTL FLM	5043ED1K000F	
R071	A174949	001.00 EA	RESISTOR 10.0K OHM 1/4W 1% MTL FLM	CCF-551002F	
R072	A178258	001.00 EA	RESISTOR 4.75K OHM 1/4W 1% 100PPM MTL FLM	5043ED4K750F	
R073	A087841	001.00 EA	POT 20K OHM 1/2W CER 3/8 SQ VERT ADJ 25T	3299W-1-203	
R074	A174000	000.00 EA	NOT USED ON THIS ASSEMBLY		
R075	A178248	001.00 EA	RESISTOR 2.00K OHM 1/4W 1% 100PPM MTL FLM	5043ED2K000F	
R076	A087838	001.00 EA	POT 2K OHM 1/2W CER 3/8 SQ VERT ADJ 25T	3299W-1-202	BOUR
R077	A178241	001.00 EA	RESISTOR 1.00K OHM 1/4W 1% 100PPM MTL FLM	5043ED1K000F	
R078	A178268	001.00 EA	RESISTOR 36.5K OHM 1/4W 1% 100PPM MTL FLM	5043ED36K50F	
R079	A178326	001.00 EA	RESISTOR 22.1 OHM 1/4W 1% 100PPM MTL FLM	5043ED22R10F	
R080	A178249	001.00 EA	RESISTOR 2.21K OHM 1/4W 1% 100PPM MTL FLM	5043ED2K210F	
R081	A178265	001.00 EA	RESISTOR 12.7K OHM 1.4W 1% 100PPM MTL FLM	5043ED12K70F	
R082	A174000	000.00 EA	NOT USED ON THIS ASSEMBLY		
R083	A178326	001.00 EA	RESISTOR 22.1 OHM 1/4W 1% 100PPM MTL FLM	5043ED22R10F	
R084	A178249	001.00 EA	RESISTOR 2.21K OHM 1/4W 1% 100PPM MTL FLM	5043ED2K210F	
R085	A178308	001.00 EA	RESISTOR 22.1K OHM 1/4W 1% 100PPM MTL FLM	5043ED22K10F	
R086	A178334	001.00 EA	RESISTOR 31.6 OHM 1/4W 1% 100PPM MTL FLM	5043ED31R60F	
R087	A083795	001.00 EA	RESISTOR 37.4 OHM RN55C 1%	XZ RN55C37R4F	
R088	A083795	001.00 EA	RESISTOR 37.4 OHM RN55C 1%	XZ RN55C37R4F	
R089	A178326	001.00 EA	RESISTOR 22.1 OHM 1/4W 1% 100PPM MTL FLM	5043ED22R10F	
R090	A174000	000.00 EA	NOT USED ON THIS ASSEMBLY		
R091	A174000	000.00 EA	NOT USED ON THIS ASSEMBLY		
R092	A174000	000.00 EA	NOT USED ON THIS ASSEMBLY		
R093	A174000	000.00 EA	NOT USED ON THIS ASSEMBLY		
R094	A174000	000.00 EA	NOT USED ON THIS ASSEMBLY		

A456224 SUB-ASSY DS1 2-POINT MONITOR A456224

Revision B
Effective: September 26, 1991

REF	SA PART	Qty	Description	Mfr Part	CAGE
R095	A174000	000.00 EA	NOT USED ON THIS ASSEMBLY		
R096	A078600	000.00 FT	NOT ASSIGNED	FOR ENG ONLY	
R097	A174000	000.00 EA	NOT USED ON THIS ASSEMBLY		
R098	A174000	000.00 EA	NOT USED ON THIS ASSEMBLY		
R099	A174000	000.00 EA	NOT USED ON THIS ASSEMBLY		
R100	A174000	000.00 EA	NOT USED ON THIS ASSEMBLY		
R101	A174000	000.00 EA	NOT USED ON THIS ASSEMBLY		
R102	A178258	001.00 EA	RESISTOR 4.75K OHM 1/4W 1% 100PPM MTL FLM	5043ED4K750F	
R103	A174000	000.00 EA	NOT USED ON THIS ASSEMBLY		
R104	A174000	000.00 EA	NOT USED ON THIS ASSEMBLY		
R105	A174000	000.00 EA	NOT USED ON THIS ASSEMBLY		
R106	A178249	001.00 EA	RESISTOR 2.21K OHM 1/4W 1% 100PPM MTL FLM	5043ED2K210F	
R107	A178258	001.00 EA	RESISTOR 4.75K OHM 1/4W 1% 100PPM MTL FLM	5043ED4K750F	
R108	A178258	001.00 EA	RESISTOR 4.75K OHM 1/4W 1% 100PPM MTL FLM	5043ED4K750F	
R109	A178308	001.00 EA	RESISTOR 22.1K OHM 1/4W 1% 100PPM MTL FLM	5043ED22K10F	
R110	A174000	000.00 EA	NOT USED ON THIS ASSEMBLY		
R111	A178247	001.00 EA	RESISTOR 1.50K OHM 1/4W 1% 100PPM MTL FLM	5043ED1K500F	
R112	A178227	001.00 EA	RESISTOR 221 OHM 1/4W 1% 100PPM MTL FLM	5043ED221R0F	
R113	A178227	001.00 EA	RESISTOR 221 OHM 1/4W 1% 100PPM MTL FLM	5043ED221R0F	
R114	A178271	001.00 EA	RESISTOR 100K OHM 1/4W 1% 100PPM MTL FLM	5043ED100K0F	
R115	A178279	001.00 EA	RESISTOR 1.0M OHM 1/4W 1% 100PPM MTL FLM	5043ED1M000F	
R116	A178271	001.00 EA	RESISTOR 100K OHM 1/4W 1% 100PPM MTL FLM	5043ED100K0F	
R117	A178279	001.00 EA	RESISTOR 1.0M OHM 1/4W 1% 100PPM MTL FLM	5043ED1M000F	
R118	A178215	001.00 EA	RESISTOR 100 OHM 1/4W 1% 100PPM MTL FLM	5043ED100R0F	
R119	A178215	001.00 EA	RESISTOR 100 OHM 1/4W 1% 100PPM MTL FLM	5043ED100R0F	
TP001	A317164	001.00 EA	TEST POINT .100 CENTER	CMP #TP101-10	
TP002	A317164	001.00 EA	TEST POINT .100 CENTER	CMP #TP101-10	
TP003	A174000	000.00 EA	NOT USED ON THIS ASSEMBLY		
TP004	A174000	000.00 EA	NOT USED ON THIS ASSEMBLY		
T001	A174000	000.00 EA	NOT USED ON THIS ASSEMBLY		
T002	A177027	001.00 EA	XFMR 1;1.37CT PRI L 680UH	2745C	
T003	A174000	000.00 EA	NOT USED ON THIS ASSEMBLY		
T004	A177027	001.00 EA	XFMR 1;1.37CT PRI L 680UH	2745C	
U001	A177252	001.00 EA	IC CMOS CNTR 8-BIT BINARY	TI SN74HC590AN	
U002	A177252	001.00 EA	IC CMOS CNTR 8-BIT BINARY	TI SN74HC590AN	
U003	A174000	000.00 EA	NOT USED ON THIS ASSEMBLY		
U004	A327878	001.00 EA	IC PATTERN GENERATOR	LSI ASIC #LIA3381-MC	
U005	A457040	001.00 EA	IC FRAMER 2	VLSI PER SA DWG 457	
U006	A327876	001.00 EA	IC CLOCK REC DIGITAL	LSI LIA3382-MC	
U007	A172179	001.00 EA	IC COMPARATOR - VOLTAGE 8L - DIP DUAL	LM393N	
U008	A327875	001.00 EA	IC DS1/1C/2/3 ANALOG CLOCK REC	NSC ACK REC	
U009	A177252	001.00 EA	IC CMOS CNTR 8-BIT BINARY	TI SN74HC590AN	
U010	A173221	001.00 EA	IC CMOS GATE NAND 2-IN QUAD	NSC MM74HC00N	
U011	A177252	001.00 EA	IC CMOS CNTR 8-BIT BINARY	TI SN74HC590AN	
U012	A174227	001.00 EA	IC CMOS LATCH 8-BIT ADDRESSABLE	CD74HC259E	
U013	A174000	000.00 EA	NOT USED ON THIS ASSEMBLY		
U014	A327878	001.00 EA	IC PATTERN GENERATOR	LSI ASIC #LIA3381-MC	
U015	A457040	001.00 EA	IC FRAMER 2	VLSI PER SA DWG 457	
U016	A327876	001.00 EA	IC CLOCK REC DIGITAL	LSI LIA3382-MC	
U017	A086514	001.00 EA	IC OP AMP JFET 8L-DIP 70C COMP DUAL	TL082ACP	
U018	A327875	001.00 EA	IC DS1/1C/2/3 ANALOG CLOCK REC	NSC ACK REC	
U019	A174000	000.00 EA	NOT USED ON THIS ASSEMBLY		
U020	A174000	000.00 EA	NOT USED ON THIS ASSEMBLY		
U021	A173221	001.00 EA	IC CMOS GATE NAND 2-IN QUAD	NSC MM74HC00N	

A456224 SUB-ASSY DS1 2-POINT MONITOR A456224

Revision B
Effective: September 26, 1991

REF	SA PART	Qty	Description	Mfr Part	CAGE
U022	A174000	000.00 EA	NOT USED ON THIS ASSEMBLY		
U023	A174000	000.00 EA	NOT USED ON THIS ASSEMBLY		
U024	A081658	001.00 EA	IC TTL BUFFER HEX OPEN-COL	SGN SN7407N	
U025	A084000	000.00 EA	VARIES WITH MODEL,SEE HIGHER ASSY FOR PN	PER S A DWG	
U026	A084000	000.00 EA	VARIES WITH MODEL,SEE HIGHER ASSY FOR PN	PER S A DWG	
U027	A084000	000.00 EA	VARIES WITH MODEL,SEE HIGHER ASSY FOR PN	PER S A DWG	
U028	A172455	001.00 EA	IC CMOS GATE AND 2-IN QUAD 14L-DIP	MM74HC08N	
U029	A177003	001.00 EA	IC CMOS TRANSCVR BUS 10-BIT	AM29C861APC	
U030	A177003	001.00 EA	IC CMOS TRANSCVR BUS 10-BIT	AM29C861APC	
U031	A084000	000.00 EA	VARIES WITH MODEL,SEE HIGHER ASSY FOR PN	PER S A DWG	
U032	A178541	001.00 EA	IC CMOS BUFFER/LINE DR 10-BIT	AMD #AM 29C 827APC	
U033	A178541	001.00 EA	IC CMOS BUFFER/LINE DR 10-BIT	AMD #AM 29C 827APC	
U034	A084000	000.00 EA	VARIES WITH MODEL,SEE HIGHER ASSY FOR PN	PER S A DWG	
U035	A084000	000.00 EA	VARIES WITH MODEL,SEE HIGHER ASSY FOR PN	PER S A DWG	
U036	A330210	001.00 EA	IC CMOS FLIP-FLOP TYPE-D	MOS MC74HC374N	
XU004	A177011	001.00 EA	SOCKET 68 POS PLCC PC MT	PLCC-68-P-T	
XU005	A177011	001.00 EA	SOCKET 68 POS PLCC PC MT	PLCC-68-P-T	
XU006	A177011	001.00 EA	SOCKET 68 POS PLCC PC MT	PLCC-68-P-T	
XU008	A177092	001.00 EA	SOCKET 44 POS PLCC PC MT	PLCC-44-P-T	
XU014	A177011	001.00 EA	SOCKET 68 POS PLCC PC MT	PLCC-68-P-T	
XU015	A177011	001.00 EA	SOCKET 68 POS PLCC PC MT	PLCC-68-P-T	
XU016	A177011	001.00 EA	SOCKET 68 POS PLCC PC MT	PLCC-68-P-T	
XU018	A177092	001.00 EA	SOCKET 44 POS PLCC PC MT	PLCC-44-P-T	
XU025	A173737	001.00 EA	SOCKET 24 PIN DIP PC MT LOW PROFILE OPEN UL94V	610-24-CC-D	
XU026	A173737	001.00 EA	SOCKET 24 PIN DIP PC MT LOW PROFILE OPEN UL94V	610-24-CC-D	
XU027	A173737	001.00 EA	SOCKET 24 PIN DIP PC MT LOW PROFILE OPEN UL94V	610-24-CC-D	
XU029	A173737	001.00 EA	SOCKET 24 PIN DIP PC MT LOW PROFILE OPEN UL94V	610-24-CC-D	
XU030	A173737	001.00 EA	SOCKET 24 PIN DIP PC MT LOW PROFILE OPEN UL94V	610-24-CC-D	
XU031	A173737	001.00 EA	SOCKET 24 PIN DIP PC MT LOW PROFILE OPEN UL94V	610-24-CC-D	
XU032	A173737	001.00 EA	SOCKET 24 PIN DIP PC MT LOW PROFILE OPEN UL94V	610-24-CC-D	
XU033	A173737	001.00 EA	SOCKET 24 PIN DIP PC MT LOW PROFILE OPEN UL94V	610-24-CC-D	
XU034	A177349	001.00 EA	SOCKET 32-PIN DIP .6W PC MT	ICT-326-S-TG	
XU035	A177349	001.00 EA	SOCKET 32-PIN DIP .6W PC MT	ICT-326-S-TG	
XU036	A086897	001.00 EA	SOCKET 20 PIN DIP PC MT	RBN ICT-203-S-TG	
Z001	A174000	000.00 EA	NOT USED ON THIS ASSEMBLY		
Z002	A174000	000.00 EA	NOT USED ON THIS ASSEMBLY		
001	A458331	001.00 EA	PWB DS1 2X2	PER SA DWG. 458331 O	
001	A456210	001.00 EA	PWB DS1 2X2	PER SA DWG. 456210 A	
002	A082463	001.00 EA	EXTRACTOR PC BOARD	THC 5005-08N	
003	A456993	001.00 EA	LABEL SET 2 POINT MONITOR DS1		

A456225 ASSY PWB DS1 2-POINT MONITOR A456225

Revision D
Effective: June 13, 1991

REF	SA PART	Qty	Description	Mfr Part	CAGE
U025	A456228	001.00 EA	ASSY PAL U25 DSI 2-PT MONITOR	PER SA DWG 456228	10110
U026	A456226	001.00 EA	ASSY PAL PRGM U26 2-PT MONITOR		
U027	A458417	001.00 EA	ASSY PAL PRGM U27 2-PT MONITOR	PER SA DWG 458417	10110
U031	A456229	001.00 EA	ASSY PAL PRGM U31 2-PT MONITOR	PER SA DWG 456229	10110
001	A456224	001.00 EA	SUB-ASSY DS1 2-POINT MONITOR		
002	M449217	001.00 EA	EPROM ASSEMBLY, 2 PT MON DS1 9000	PER SA DWG 449217	42061
003	A456976	001.00 EA	BRACKET BOARD LEGEND-2PT DS1		
005	A177365	002.00 EA	SPACER NO.4 ID 1/4 OD 3/32L NI	UNICORP S-503-M01-F0	
006	A071494	002.00 EA	NUT 4-40 UNC-2B,PLAIN-HEX,SST	PER MS35649-244	
007	A072321	002.00 EA	SCREW 4-40 X 3/8 F HD,82 DEG,SST	ATY 72321	
008	A073266	002.00 EA	WASHER-NO. 4- .125 .250 .022 AUS SST	PER ANSI B.18.22.1	
009	A073265	002.00 EA	WASHER NO. 4 LOCK EXT TOOTH CAD PLT STL	PER MS35335-29	96906

A456987 ASSY POWER SUPPLY AC DAS A456987

Revision -
Effective: July 01, 1990

REF	SA PART	Qty	Description	Mfr Part	CAGE
P001	A177038	001.00 EA	CONN BODY W/O INSERTS 3 HOLES	MOL #22-01-2037	
P002	A177038	001.00 EA	CONN BODY W/O INSERTS 3 HOLES	MOL #22-01-2037	
001	A459032	001.00 EA	ENCLOSURE POWER SUPPLY	PER SA DWG.	
002	A456206	001.00 EA	ASSY PWB POWER SUPPLY AC DAS		
003	A328083	001.00 EA	HEATSINK POWER SUPPLY	PER SA DWG.	
004	A306201	001.00 EA	THERMAL PAD NON-INSUL 4.6X7.35	BERQ PER SA DWG 306	
005	A075775	018.00 EA	SCREW 6-32 X 1 SOC CAP SST	BY DESCRIPTION	
006	A174555	018.00 EA	WASHER NO. 6 LOCK, SPLIT, SST	ATY PER DESC 174555	
007	A328060	001.00 EA	COVER, POWER SUPPLY	PER SA DESC	
008	A072350	001.00 EA	SCREW 6-32 X 1/4 PAN HD,SST	ATY MS51957-26	
009	A073269	001.00 EA	WASHER NO. 6 LOCK EXT TOOTH CAD PLT STL	PER ANSI B.18.21.1	
010	A174651	000.03 PD	LABEL DANGER HIGH VOLTAGE 1 1/2X3 3/16	PAN PSSB-13	
011	A177039	002.00 EA	CONN CONTACT 22-30AWG FEM GOLD PLT (USE W/ 177	08-55-0102	
012	A078600	000.00 FT	NOT ASSIGNED	FOR ENG ONLY	
013	A073045	002.00 EA	CABLE TIE - MINIATURE - 4 IN. LONG	PAN PLT1M-M	
014	A073334	003.50 FT	WIRE 16 STRANDED BLACK	LAN #LC16-1929 BLK	
015	A073339	003.50 FT	WIRE 16 STRANDED VIOLET	LAN#LC16-1929 VIOLET	
016	A073336	004.00 FT	WIRE 16 STRANDED RED	LAN #LC16-1929 RED	
017	A073394	000.50 FT	WIRE 22 STRANDED WHITE	LAN #LB22-1934 WHITE	

A458359 SUB-ASSY PWB RTC DTA A458359

Revision A
Effective: April 26, 1991

REF	SA PART	Qty	Description	Mfr Part	CAGE
	A458358	000.00 EA	SCHEMATIC RTC DTA		
BT001	A306233	001.00 EA	BATTERY NI-CAD 3.6V 100MA HRS	VARTA 100DKO	
C001	A083649	001.00 EA	CAPACITR 7-25 PF MIN CER DISC PC MT	538-011-B-7-25	
C002	A070470	001.00 EA	CAPACITR 10 PF 500V SILVER MICA 5%	CD15CD100J03	
C003	A035654	001.00 EA	CAPACITR 10 MF 25V 10% SOLID TANT	T354E106K025AS	
C004	A080139	001.00 EA	CAPACITR .1 MF 50V CER MONO -20%/+80%	RPE122Z5U104Z050V	
C005	A080139	001.00 EA	CAPACITR .1 MF 50V CER MONO -20%/+80%	RPE122Z5U104Z050V	
C006	A035654	001.00 EA	CAPACITR 10 MF 25V 10% SOLID TANT	T354E106K025AS	
C007	A035654	001.00 EA	CAPACITR 10 MF 25V 10% SOLID TANT	T354E106K025AS	
C008	A080139	001.00 EA	CAPACITR .1 MF 50V CER MONO -20%/+80%	RPE122Z5U104Z050V	
C009	A080139	001.00 EA	CAPACITR .1 MF 50V CER MONO -20%/+80%	RPE122Z5U104Z050V	
C010	A080139	001.00 EA	CAPACITR .1 MF 50V CER MONO -20%/+80%	RPE122Z5U104Z050V	
C011	A080139	001.00 EA	CAPACITR .1 MF 50V CER MONO -20%/+80%	RPE122Z5U104Z050V	
C012	A080139	001.00 EA	CAPACITR .1 MF 50V CER MONO -20%/+80%	RPE122Z5U104Z050V	
C013	A080139	001.00 EA	CAPACITR .1 MF 50V CER MONO -20%/+80%	RPE122Z5U104Z050V	
C014	A080139	001.00 EA	CAPACITR .1 MF 50V CER MONO -20%/+80%	RPE122Z5U104Z050V	
C015	A080139	001.00 EA	CAPACITR .1 MF 50V CER MONO -20%/+80%	RPE122Z5U104Z050V	
C016	A080139	001.00 EA	CAPACITR .1 MF 50V CER MONO -20%/+80%	RPE122Z5U104Z050V	
C017	A080139	001.00 EA	CAPACITR .1 MF 50V CER MONO -20%/+80%	RPE122Z5U104Z050V	
C018	A078600	000.00 FT	NOT ASSIGNED	FOR ENG ONLY	
C019	A078600	000.00 FT	NOT ASSIGNED	FOR ENG ONLY	
C020	A078600	000.00 FT	NOT ASSIGNED	FOR ENG ONLY	
C021	A078600	000.00 FT	NOT ASSIGNED	FOR ENG ONLY	
C022	A078600	000.00 FT	NOT ASSIGNED	FOR ENG ONLY	
C023	A078600	000.00 FT	NOT ASSIGNED	FOR ENG ONLY	
C024	A078600	000.00 FT	NOT ASSIGNED	FOR ENG ONLY	
C025	A080139	001.00 EA	CAPACITR .1 MF 50V CER MONO -20%/+80%	RPE122Z5U104Z050V	
C026	A078600	000.00 FT	NOT ASSIGNED	FOR ENG ONLY	
C027	A080139	001.00 EA	CAPACITR .1 MF 50V CER MONO -20%/+80%	RPE122Z5U104Z050V	
C028	A080139	001.00 EA	CAPACITR .1 MF 50V CER MONO -20%/+80%	RPE122Z5U104Z050V	
C029	A080139	001.00 EA	CAPACITR .1 MF 50V CER MONO -20%/+80%	RPE122Z5U104Z050V	
C030	A080139	001.00 EA	CAPACITR .1 MF 50V CER MONO -20%/+80%	RPE122Z5U104Z050V	
C031	A080139	001.00 EA	CAPACITR .1 MF 50V CER MONO -20%/+80%	RPE122Z5U104Z050V	
C032	A080139	001.00 EA	CAPACITR .1 MF 50V CER MONO -20%/+80%	RPE122Z5U104Z050V	
C033	A080139	001.00 EA	CAPACITR .1 MF 50V CER MONO -20%/+80%	RPE122Z5U104Z050V	
C034	A070540	001.00 EA	CAPACITR 470 PF 1KV CER DISC Z5F 10%	DD471	
C035	A080139	001.00 EA	CAPACITR .1 MF 50V CER MONO -20%/+80%	RPE122Z5U104Z050V	
C036	A080139	001.00 EA	CAPACITR .1 MF 50V CER MONO -20%/+80%	RPE122Z5U104Z050V	
C037	A080139	001.00 EA	CAPACITR .1 MF 50V CER MONO -20%/+80%	RPE122Z5U104Z050V	
C038	A080139	001.00 EA	CAPACITR .1 MF 50V CER MONO -20%/+80%	RPE122Z5U104Z050V	
C039	A080139	001.00 EA	CAPACITR .1 MF 50V CER MONO -20%/+80%	RPE122Z5U104Z050V	
C040	A080139	001.00 EA	CAPACITR .1 MF 50V CER MONO -20%/+80%	RPE122Z5U104Z050V	
C041	A080139	001.00 EA	CAPACITR .1 MF 50V CER MONO -20%/+80%	RPE122Z5U104Z050V	
C042	A035654	001.00 EA	CAPACITR 10 MF 25V 10% SOLID TANT	T354E106K025AS	
C043	A080139	001.00 EA	CAPACITR .1 MF 50V CER MONO -20%/+80%	RPE122Z5U104Z050V	
C044	A080139	001.00 EA	CAPACITR .1 MF 50V CER MONO -20%/+80%	RPE122Z5U104Z050V	
C045	A080139	001.00 EA	CAPACITR .1 MF 50V CER MONO -20%/+80%	RPE122Z5U104Z050V	
DS001	A177211	001.00 EA	LAMP LED-RSTR RED PC MT 5V 3MA	555-2007	
DS002	A177211	001.00 EA	LAMP LED-RSTR RED PC MT 5V 3MA	555-2007	
DS003	A177211	001.00 EA	LAMP LED-RSTR RED PC MT 5V 3MA	555-2007	
DS004	A177211	001.00 EA	LAMP LED-RSTR RED PC MT 5V 3MA	555-2007	
DS005	A177211	001.00 EA	LAMP LED-RSTR RED PC MT 5V 3MA	555-2007	
DS006	A177211	001.00 EA	LAMP LED-RSTR RED PC MT 5V 3MA	555-2007	
DS007	A177211	001.00 EA	LAMP LED-RSTR RED PC MT 5V 3MA	555-2007	
E001	A177971	001.00 EA	CHOKE WIDE-BAND 3B .236X394L	VK20009-3B	

A458359 SUB-ASSY PWB RTC DTA A458359

Revision A
Effective: April 26, 1991

REF	SA PART	Qty	Description	Mfr Part	CAGE
E002	A177971	001.00 EA	CHOKE WIDE-BAND 3B .236X394L	VK20009-3B	
E003	A177971	001.00 EA	CHOKE WIDE-BAND 3B .236X394L	VK20009-3B	
J001	A173712	001.00 EA	CONN RECT 96-COND MALE PNL MT RT ANG PC MT	532505-1	00779
J002	A173712	001.00 EA	CONN RECT 96-COND MALE PNL MT RT ANG PC MT	532505-1	00779
J003	A176974	001.00 EA	CONN RECT 48-COND MALE RT ANG PC MT	10-8457-048-002-025	
J004	A172726	001.00 EA	CONN HEADER SGL ROW RT ANG 2-PIN PC MT	640099-2	00779
J005	A078600	000.00 FT	NOT ASSIGNED	FOR ENG ONLY	
J006	A087229	001.00 EA	CONN HEADER SGL ROW STRAIGHT 2-PIN PC MT	87220-2	00779
J007	A078600	000.00 FT	NOT ASSIGNED	FOR ENG ONLY	
J008	A078600	000.00 FT	NOT ASSIGNED	FOR ENG ONLY	
J009	A078600	000.00 FT	NOT ASSIGNED	FOR ENG ONLY	
J010	A078600	000.00 FT	NOT ASSIGNED	FOR ENG ONLY	
J011	A078600	000.00 FT	NOT ASSIGNED	FOR ENG ONLY	
J012	A174000	000.00 EA	NOT USED ON THIS ASSEMBLY		
J013	A177177	002.00 EA	TERMNL QUICK DISC 20-16FEM.187	AMP 42638-2	
P004	A086884	001.00 EA	JUMPER FEMALE INSULATED .10 SPACING	65474-004	
P006	A086884	001.00 EA	JUMPER FEMALE INSULATED .10 SPACING	65474-004	
Q001	A077147	001.00 EA	TRANSSTR 2N3947 NPN SIL	MOT 2N3947	
Q002	A077148	001.00 EA	TRANSSTR 2N3251 PNP SIL	2N3251	
Q003	A083033	001.00 EA	TRANSSTR 2N2907A PNP SIL	MOS 2N2907A	
Q004	A077147	001.00 EA	TRANSSTR 2N3947 NPN SIL	MOT 2N3947	
Q005	A177028	001.00 EA	TRANSSTR 2N7000 FET N-CHNL	SILX #2N7000	
R001	A178252	001.00 EA	RESISTOR 3.32K OHM 1/4W 1% 100PPM MTL FLM	5043ED3K320F	
R001	A071989	001.00 EA	RESISTOR 3.3K OHM 1/4W 10% COMP	RCR07G332KS	
R001	A074714	001.00 EA	RESISTOR 3.3K OHM 1/4W 5% COMP	CR07G332JS	
R002	A178258	001.00 EA	RESISTOR 4.75K OHM 1/4W 1% 100PPM MTL FLM	5043ED4K750F	
R003	A178252	001.00 EA	RESISTOR 3.32K OHM 1/4W 1% 100PPM MTL FLM	5043ED3K320F	
R003	A071989	001.00 EA	RESISTOR 3.3K OHM 1/4W 10% COMP	RCR07G332KS	
R003	A074714	001.00 EA	RESISTOR 3.3K OHM 1/4W 5% COMP	CR07G332JS	
R004	A078600	000.00 FT	NOT ASSIGNED	FOR ENG ONLY	
R005	A078600	000.00 FT	NOT ASSIGNED	FOR ENG ONLY	
R006	A178258	001.00 EA	RESISTOR 4.75K OHM 1/4W 1% 100PPM MTL FLM	5043ED4K750F	
R007	A178271	001.00 EA	RESISTOR 100K OHM 1/4W 1% 100PPM MTL FLM	5043ED100K0F	
R008	A081341	001.00 EA	RESISTOR 22 MEG 1/4W 10% COMP	RCR07G226KS	
R009	A178237	001.00 EA	RESISTOR 750 OHM 1/4W 1% 100PPM MTL FLM	5043ED750R0F	
R010	A178258	001.00 EA	RESISTOR 4.75K OHM 1/4W 1% 100PPM MTL FLM	5043ED4K750F	
R011	A174949	001.00 EA	RESISTOR 10.0K OHM 1/4W 1% MTL FLM	CCF-551002F	
R012	A178215	001.00 EA	RESISTOR 100 OHM 1/4W 1% 100PPM MTL FLM	5043ED100R0F	
R013	A178271	001.00 EA	RESISTOR 100K OHM 1/4W 1% 100PPM MTL FLM	5043ED100K0F	
R014	A178249	001.00 EA	RESISTOR 2.21K OHM 1/4W 1% 100PPM MTL FLM	5043ED2K210F	
R015	A077672	001.00 EA	RESISTOR 33K OHM 1/4W 5% COMP	RCR07G333JS	
R016	A178258	001.00 EA	RESISTOR 4.75K OHM 1/4W 1% 100PPM MTL FLM	5043ED4K750F	
R017	A178258	001.00 EA	RESISTOR 4.75K OHM 1/4W 1% 100PPM MTL FLM	5043ED4K750F	
R018	A178258	001.00 EA	RESISTOR 4.75K OHM 1/4W 1% 100PPM MTL FLM	5043ED4K750F	
R019	A174949	001.00 EA	RESISTOR 10.0K OHM 1/4W 1% MTL FLM	CCF-551002F	
R020	A178241	001.00 EA	RESISTOR 1.00K OHM 1/4W 1% 100PPM MTL FLM	5043ED1K000F	
R021	A178258	001.00 EA	RESISTOR 4.75K OHM 1/4W 1% 100PPM MTL FLM	5043ED4K750F	
R022	A178247	001.00 EA	RESISTOR 1.50K OHM 1/4W 1% 100PPM MTL FLM	5043ED1K500F	
R023	A078600	000.00 FT	NOT ASSIGNED	FOR ENG ONLY	
R024	A178241	001.00 EA	RESISTOR 1.00K OHM 1/4W 1% 100PPM MTL FLM	5043ED1K000F	
R025	A078600	000.00 FT	NOT ASSIGNED	FOR ENG ONLY	
R026	A078600	000.00 FT	NOT ASSIGNED	FOR ENG ONLY	
R027	A178258	001.00 EA	RESISTOR 4.75K OHM 1/4W 1% 100PPM MTL FLM	5043ED4K750F	
R028	A178258	001.00 EA	RESISTOR 4.75K OHM 1/4W 1% 100PPM MTL FLM	5043ED4K750F	

A458359 SUB-ASSY PWB RTC DTA A458359

Revision A
Effective: April 26, 1991

REF	SA PART	Qty	Description	Mfr Part	CAGE
R029	A178258	001.00 EA	RESISTOR 4.75K OHM 1/4W 1% 100PPM MTL FLM	5043ED4K750F	
R030	A078600	000.00 FT	NOT ASSIGNED	FOR ENG ONLY	
R031	A178258	001.00 EA	RESISTOR 4.75K OHM 1/4W 1% 100PPM MTL FLM	5043ED4K750F	
R032	A178258	001.00 EA	RESISTOR 4.75K OHM 1/4W 1% 100PPM MTL FLM	5043ED4K750F	
R033	A178241	001.00 EA	RESISTOR 1.00K OHM 1/4W 1% 100PPM MTL FLM	5043ED1K000F	
R034	A178251	001.00 EA	RESISTOR 3.01K OHM 1/4W 1% 100PPM MTL FLM	5043ED3K010F	
R035	A178248	001.00 EA	RESISTOR 2.00K OHM 1/4W 1% 100PPM MTL FLM	5043ED2K000F	
R036	A178271	001.00 EA	RESISTOR 100K OHM 1/4W 1% 100PPM MTL FLM	5043ED100K0F	
R037	A178256	001.00 EA	RESISTOR 4.02K OHM 1/4W 1% 100PPM MTL FLM	5043ED4K020F	
R038	A078600	000.00 FT	NOT ASSIGNED	FOR ENG ONLY	
R039	A078600	000.00 FT	NOT ASSIGNED	FOR ENG ONLY	
R040	A078600	000.00 FT	NOT ASSIGNED	FOR ENG ONLY	
R041	A078600	000.00 FT	NOT ASSIGNED	FOR ENG ONLY	
R042	A078600	000.00 FT	NOT ASSIGNED	FOR ENG ONLY	
R043	A178308	001.00 EA	RESISTOR 22.1K OHM 1/4W 1% 100PPM MTL FLM	5043ED22K10F	
R044	A178230	001.00 EA	RESISTOR 332 OHM 1/4W 1% 100PPM MTL FLM	5043ED332R0F	
R045	A178230	001.00 EA	RESISTOR 332 OHM 1/4W 1% 100PPM MTL FLM	5043ED332R0F	
SP001	A176977	001.00 EA	ALARM .1-324KHZ 105DB 30VPP MAX	PKD33EP-01R	
S001	A083296	001.00 EA	SWITCH SPST 8 POS PC MT DIP	5-435166-3	00779
U001	A084000	000.00 EA	VARIES WITH MODEL,SEE HIGHER ASSY FOR PN	PER S A DWG	
U002	A084000	000.00 EA	VARIES WITH MODEL,SEE HIGHER ASSY FOR PN	PER S A DWG	
U003	A084000	000.00 EA	VARIES WITH MODEL,SEE HIGHER ASSY FOR PN	PER S A DWG	
U004	A084000	000.00 EA	VARIES WITH MODEL,SEE HIGHER ASSY FOR PN	PER S A DWG	
U005	A084000	000.00 EA	VARIES WITH MODEL,SEE HIGHER ASSY FOR PN	PER S A DWG	
U006	A084000	000.00 EA	VARIES WITH MODEL,SEE HIGHER ASSY FOR PN	PER S A DWG	
U007	A084000	000.00 EA	VARIES WITH MODEL,SEE HIGHER ASSY FOR PN	PER S A DWG	
U008	A084000	000.00 EA	VARIES WITH MODEL,SEE HIGHER ASSY FOR PN	PER S A DWG	
U009	A173221	001.00 EA	IC CMOS GATE NAND 2-IN QUAD 14L-DIP	MM74HC00N	
U010	A173221	001.00 EA	IC CMOS GATE NAND 2-IN QUAD 14L-DIP	MM74HC00N	
U011	A176988	001.00 EA	IC SCC CMOS 6MHZ HQL-DIP	VLSX VL85C30-10PC	
U012	A177170	001.00 EA	OSCILATR XTAL 7.9872 MHZ .005% .5 X .8 PC MT	RXDT-1-7.9872 MHZ	
U013	A173223	001.00 EA	IC CMOS INVERTER HEX 14L-DIP	MM74HC04N	
U014	A174000	000.00 EA	NOT USED ON THIS ASSEMBLY		
U015	A174000	000.00 EA	NOT USED ON THIS ASSEMBLY		
U016	A174000	000.00 EA	NOT USED ON THIS ASSEMBLY		
U017	A174000	000.00 EA	NOT USED ON THIS ASSEMBLY		
U018	A174000	000.00 EA	NOT USED ON THIS ASSEMBLY		
U019	A174000	000.00 EA	NOT USED ON THIS ASSEMBLY		
U020	A174000	000.00 EA	NOT USED ON THIS ASSEMBLY		
U021	A174227	001.00 EA	IC CMOS LATCH 8-BIT ADDRESSABLE	CD74HC259E	
U022	A172458	001.00 EA	IC CMOS FLIP-FLOP TYPE-D DUAL	MM74HC74N	
U023	A172455	001.00 EA	IC CMOS GATE AND 2-IN QUAD 14L-DIP	MM74HC08N	
U024	A078600	000.00 FT	NOT ASSIGNED	FOR ENG ONLY	
U026	A176985	001.00 EA	IC CMOS INVERTER HEX OPN DRAIN	TI SN74HC05N	
U027	A170303	001.00 EA	IC CLOCK CALENDAR FOR MICROS CMOS	MM58167BN	
U028	A176987	001.00 EA	IC CONT FOR MICROPROCESSOR PWR	MAX 691CPE	
U029	A076778	001.00 EA	IC TTL COUNTER DECADE 20-MHZ 2X5	SN74176N	
U030	A173644	001.00 EA	IC BUSS TRANSCVR IEEE 488 INTERFACE	TI TMS9914ANL	
U031	A330211	001.00 EA	IC CMOS BUFFER OCTAL	MM74HC244N	
U032	A330211	001.00 EA	IC CMOS BUFFER OCTAL	MM74HC244N	
U033	A177251	001.00 EA	IC CMOS LTCH 10B TRNSPRNT 3-ST	AMD AM29C841PC	
U034	A178541	001.00 EA	IC CMOS BUFFER/LINE DR 10-BIT	AMD #AM 29C 827APC	
U035	A174388	001.00 EA	IC CMOS COMPARATOR MAGNITUDE	MOS MC74HC85N	
U036	A084000	000.00 EA	VARIES WITH MODEL,SEE HIGHER ASSY FOR PN	PER S A DWG	

A458359 SUB-ASSY PWB RTC DTA A458359

Revision A
Effective: April 26, 1991

REF	SA PART	Qty	Description	Mfr Part	CAGE
U037	A084000	000.00 EA	VARIES WITH MODEL,SEE HIGHER ASSY FOR PN	PER S A DWG	
U038	A177003	001.00 EA	IC CMOS TRANSCVR BUS 10-BIT	AM29C861APC	
U039	A084000	000.00 EA	VARIES WITH MODEL,SEE HIGHER ASSY FOR PN	PER S A DWG	
U040	A084000	000.00 EA	VARIES WITH MODEL,SEE HIGHER ASSY FOR PN	PER S A DWG	
U041	A178541	001.00 EA	IC CMOS BUFFER/LINE DR 10-BIT	AMD #AM 29C 827APC	
U042	A178541	001.00 EA	IC CMOS BUFFER/LINE DR 10-BIT	AMD #AM 29C 827APC	
U043	A178541	001.00 EA	IC CMOS BUFFER/LINE DR 10-BIT	AMD #AM 29C 827APC	
U044	A177003	001.00 EA	IC CMOS TRANSCVR BUS 10-BIT	AM29C861APC	
U045	A177003	001.00 EA	IC CMOS TRANSCVR BUS 10-BIT	AM29C861APC	
U046	A084000	000.00 EA	VARIES WITH MODEL,SEE HIGHER ASSY FOR PN	PER S A DWG	
U047	A084000	000.00 EA	VARIES WITH MODEL,SEE HIGHER ASSY FOR PN	PER S A DWG	
U048	A174227	001.00 EA	IC CMOS LATCH 8-BIT ADDRESSABLE	CD74HC259E	
U049	A081658	001.00 EA	IC TTL BUFFER HEX OPEN-COL	SGN SN7407N	
U050	A172458	001.00 EA	IC CMOS FLIP-FLOP TYPE-D DUAL	MM74HC74N	
U051	A089838	001.00 EA	RESISTOR NETWORK 9 100K OHM 2% 10 SIP	BLI 4310R-101-104	
U052	A089838	001.00 EA	RESISTOR NETWORK 9 100K OHM 2% 10 SIP	BLI 4310R-101-104	
U053	A089838	001.00 EA	RESISTOR NETWORK 9 100K OHM 2% 10 SIP	BLI 4310R-101-104	
U054	A089838	001.00 EA	RESISTOR NETWORK 9 100K OHM 2% 10 SIP	BLI 4310R-101-104	
U055	A086899	001.00 EA	RESISTOR NETWORK 9 3.3K OHM 2% 10 SIP	4310R-101-332	
U056	A089838	001.00 EA	RESISTOR NETWORK 9 100K OHM 2% 10 SIP	BLI 4310R-101-104	
U057	A078600	000.00 FT	NOT ASSIGNED	FOR ENG ONLY	
U058	A172458	001.00 EA	IC CMOS FLIP-FLOP TYPE-D DUAL	MM74HC74N	
U059	A078600	000.00 FT	NOT ASSIGNED	FOR ENG ONLY	
U060	A078600	000.00 FT	NOT ASSIGNED	FOR ENG ONLY	
U061	A078600	000.00 FT	NOT ASSIGNED	FOR ENG ONLY	
XU001	A086652	001.00 EA	SOCKET 28 PIN DIP PC MT	RBN ICT-286-S-TG	
XU002	A086652	001.00 EA	SOCKET 28 PIN DIP PC MT	RBN ICT-286-S-TG	
XU003	A086652	001.00 EA	SOCKET 28 PIN DIP PC MT	RBN ICT-286-S-TG	
XU004	A086652	001.00 EA	SOCKET 28 PIN DIP PC MT	RBN ICT-286-S-TG	
XU005	A086652	001.00 EA	SOCKET 28 PIN DIP PC MT	RBN ICT-286-S-TG	
XU006	A086652	001.00 EA	SOCKET 28 PIN DIP PC MT	RBN ICT-286-S-TG	
XU007	A086652	001.00 EA	SOCKET 28 PIN DIP PC MT	RBN ICT-286-S-TG	
XU008	A086652	001.00 EA	SOCKET 28 PIN DIP PC MT	RBN ICT-286-S-TG	
XU011	A086653	001.00 EA	SOCKET 40 PIN DIP PC MT	RBN ICT-406-S-TG	
XU014	A078600	000.00 FT	NOT ASSIGNED	FOR ENG ONLY	
XU015	A078600	000.00 FT	NOT ASSIGNED	FOR ENG ONLY	
XU016	A078600	000.00 FT	NOT ASSIGNED	FOR ENG ONLY	
XU017	A078600	000.00 FT	NOT ASSIGNED	FOR ENG ONLY	
XU018	A078600	000.00 FT	NOT ASSIGNED	FOR ENG ONLY	
XU019	A078600	000.00 FT	NOT ASSIGNED	FOR ENG ONLY	
XU020	A078600	000.00 FT	NOT ASSIGNED	FOR ENG ONLY	
XU027	A086651	001.00 EA	SOCKET 24 PIN DIP PC MT	RBN ICT-246-S-TG	
XU030	A086653	001.00 EA	SOCKET 40 PIN DIP PC MT	RBN ICT-406-S-TG	
XU031	A086897	001.00 EA	SOCKET 20 PIN DIP PC MT	RBN ICT-203-S-TG	
XU032	A086897	001.00 EA	SOCKET 20 PIN DIP PC MT	RBN ICT-203-S-TG	
XU033	A173737	001.00 EA	SOCKET 24 PIN DIP PC MT LOW PROFILE OPEN UL94V	610-24-CC-D	
XU034	A173737	001.00 EA	SOCKET 24 PIN DIP PC MT LOW PROFILE OPEN UL94V	610-24-CC-D	
XU036	A173737	001.00 EA	SOCKET 24 PIN DIP PC MT LOW PROFILE OPEN UL94V	610-24-CC-D	
XU037	A173737	001.00 EA	SOCKET 24 PIN DIP PC MT LOW PROFILE OPEN UL94V	610-24-CC-D	
XU038	A173737	001.00 EA	SOCKET 24 PIN DIP PC MT LOW PROFILE OPEN UL94V	610-24-CC-D	
XU039	A173737	001.00 EA	SOCKET 24 PIN DIP PC MT LOW PROFILE OPEN UL94V	610-24-CC-D	
XU040	A173737	001.00 EA	SOCKET 24 PIN DIP PC MT LOW PROFILE OPEN UL94V	610-24-CC-D	
XU041	A173737	001.00 EA	SOCKET 24 PIN DIP PC MT LOW PROFILE OPEN UL94V	610-24-CC-D	
XU042	A173737	001.00 EA	SOCKET 24 PIN DIP PC MT LOW PROFILE OPEN UL94V	610-24-CC-D	

A458359 SUB-ASSY PWB RTC DTA A458359

Revision A
Effective: April 26, 1991

REF	SA PART	Qty	Description	Mfr Part	CAGE
XU043	A173737	001.00 EA	SOCKET 24 PIN DIP PC MT LOW PROFILE OPEN UL94V	610-24-CC-D	
XU044	A173737	001.00 EA	SOCKET 24 PIN DIP PC MT LOW PROFILE OPEN UL94V	610-24-CC-D	
XU045	A173737	001.00 EA	SOCKET 24 PIN DIP PC MT LOW PROFILE OPEN UL94V	610-24-CC-D	
XU046	A086897	001.00 EA	SOCKET 20 PIN DIP PC MT	RBN ICT-203-S-TG	
XU047	A173737	001.00 EA	SOCKET 24 PIN DIP PC MT LOW PROFILE OPEN UL94V	610-24-CC-D	
Y001	A170302	001.00 EA	CRYSTAL 32.768 KHZ .003% PARALLEL RES	CX-1V-32.768KHZ CAL	
001	A458354	001.00 EA	PWB RTC DTA	PER SA DWG. 458354 O	
002	A082463	002.00 EA	EXTRACTOR PC BOARD	THC 5005-08N	
005	A317056	001.00 EA	DUAL IN-LINE PAD	814-045	
006	A085749	000.10 RL	TAPE NEOP FOAM .5 THK .5 W ADHSV	GER BY DESC	

A459033 ASSY PWB MOTHERBOARD DAS A459033

Revision -
Effective: July 01, 1990

REF	SA PART	Qty	Description	Mfr Part	CAGE
	A459034	000.00 EA	SCHEMATIC MOTHERBOARD DAS		
BB001	A306191	001.00 EA	BUS PWR 3 LAYER 10A 16.9.2.4	ROGERS 1SCIMB01Z	
BB002	A306191	001.00 EA	BUS PWR 3 LAYER 10A 16.9.2.4	ROGERS 1SCIMB01Z	
BB003	A306191	001.00 EA	BUS PWR 3 LAYER 10A 16.9.2.4	ROGERS 1SCIMB01Z	
BB004	A306191	001.00 EA	BUS PWR 3 LAYER 10A 16.9.2.4	ROGERS 1SCIMB01Z	
CR001	A071122	001.00 EA	DIODE 1N914 SIL 75V 75MA	1N914	
CR002	A071122	001.00 EA	DIODE 1N914 SIL 75V 75MA	1N914	
CR003	A071122	001.00 EA	DIODE 1N914 SIL 75V 75MA	1N914	
C001	A080139	001.00 EA	CAPACITR .1 MF 50V CER MONO -20%/+80%	RPE122Z5U104Z050V	
C002	A035654	001.00 EA	CAPACITR 10 MF 25V 10% SOLID TANT	T354E106K025AS	
C003	A035654	001.00 EA	CAPACITR 10 MF 25V 10% SOLID TANT	T354E106K025AS	
C004	A080139	001.00 EA	CAPACITR .1 MF 50V CER MONO -20%/+80%	RPE122Z5U104Z050V	
C005	A080139	001.00 EA	CAPACITR .1 MF 50V CER MONO -20%/+80%	RPE122Z5U104Z050V	
C006	A035654	001.00 EA	CAPACITR 10 MF 25V 10% SOLID TANT	T354E106K025AS	
C007	A035654	001.00 EA	CAPACITR 10 MF 25V 10% SOLID TANT	T354E106K025AS	
C008	A080139	001.00 EA	CAPACITR .1 MF 50V CER MONO -20%/+80%	RPE122Z5U104Z050V	
C009	A080139	001.00 EA	CAPACITR .1 MF 50V CER MONO -20%/+80%	RPE122Z5U104Z050V	
C010	A035654	001.00 EA	CAPACITR 10 MF 25V 10% SOLID TANT	T354E106K025AS	
C011	A035654	001.00 EA	CAPACITR 10 MF 25V 10% SOLID TANT	T354E106K025AS	
C012	A080139	001.00 EA	CAPACITR .1 MF 50V CER MONO -20%/+80%	RPE122Z5U104Z050V	
C013	A035654	001.00 EA	CAPACITR 10 MF 25V 10% SOLID TANT	T354E106K025AS	
C014	A080139	001.00 EA	CAPACITR .1 MF 50V CER MONO -20%/+80%	RPE122Z5U104Z050V	
C015	A035654	001.00 EA	CAPACITR 10 MF 25V 10% SOLID TANT	T354E106K025AS	
C016	A080139	001.00 EA	CAPACITR .1 MF 50V CER MONO -20%/+80%	RPE122Z5U104Z050V	
C017	A035654	001.00 EA	CAPACITR 10 MF 25V 10% SOLID TANT	T354E106K025AS	
C018	A080139	001.00 EA	CAPACITR .1 MF 50V CER MONO -20%/+80%	RPE122Z5U104Z050V	
C019	A080139	001.00 EA	CAPACITR .1 MF 50V CER MONO -20%/+80%	RPE122Z5U104Z050V	
C020	A035654	001.00 EA	CAPACITR 10 MF 25V 10% SOLID TANT	T354E106K025AS	
C021	A035654	001.00 EA	CAPACITR 10 MF 25V 10% SOLID TANT	T354E106K025AS	
C022	A080139	001.00 EA	CAPACITR .1 MF 50V CER MONO -20%/+80%	RPE122Z5U104Z050V	
C023	A080139	001.00 EA	CAPACITR .1 MF 50V CER MONO -20%/+80%	RPE122Z5U104Z050V	
C024	A035654	001.00 EA	CAPACITR 10 MF 25V 10% SOLID TANT	T354E106K025AS	
C025	A035654	001.00 EA	CAPACITR 10 MF 25V 10% SOLID TANT	T354E106K025AS	
C026	A080139	001.00 EA	CAPACITR .1 MF 50V CER MONO -20%/+80%	RPE122Z5U104Z050V	
C027	A080139	001.00 EA	CAPACITR .1 MF 50V CER MONO -20%/+80%	RPE122Z5U104Z050V	
C028	A035654	001.00 EA	CAPACITR 10 MF 25V 10% SOLID TANT	T354E106K025AS	
C029	A035654	001.00 EA	CAPACITR 10 MF 25V 10% SOLID TANT	T354E106K025AS	
C030	A080139	001.00 EA	CAPACITR .1 MF 50V CER MONO -20%/+80%	RPE122Z5U104Z050V	
C031	A080139	001.00 EA	CAPACITR .1 MF 50V CER MONO -20%/+80%	RPE122Z5U104Z050V	
C032	A035654	001.00 EA	CAPACITR 10 MF 25V 10% SOLID TANT	T354E106K025AS	
C033	A035654	001.00 EA	CAPACITR 10 MF 25V 10% SOLID TANT	T354E106K025AS	
C034	A080139	001.00 EA	CAPACITR .1 MF 50V CER MONO -20%/+80%	RPE122Z5U104Z050V	
C035	A035654	001.00 EA	CAPACITR 10 MF 25V 10% SOLID TANT	T354E106K025AS	
C036	A080139	001.00 EA	CAPACITR .1 MF 50V CER MONO -20%/+80%	RPE122Z5U104Z050V	
C037	A080139	001.00 EA	CAPACITR .1 MF 50V CER MONO -20%/+80%	RPE122Z5U104Z050V	
C038	A080139	001.00 EA	CAPACITR .1 MF 50V CER MONO -20%/+80%	RPE122Z5U104Z050V	
C039	A080139	001.00 EA	CAPACITR .1 MF 50V CER MONO -20%/+80%	RPE122Z5U104Z050V	
C040	A086013	001.00 EA	CAPACITR 22 MF 25V SOLID TANT	T354H226K025AS	
C041	A086013	001.00 EA	CAPACITR 22 MF 25V SOLID TANT	T354H226K025AS	
C042	A081109	001.00 EA	CAPACITR 47 MF 20V 10% SOLID TANT POL	T354K476K020AS	
C043	A086013	001.00 EA	CAPACITR 22 MF 25V SOLID TANT	T354H226K025AS	
C044	A086013	001.00 EA	CAPACITR 22 MF 25V SOLID TANT	T354H226K025AS	
C045	A081109	001.00 EA	CAPACITR 47 MF 20V 10% SOLID TANT POL	T354K476K020AS	
C046	A086013	001.00 EA	CAPACITR 22 MF 25V SOLID TANT	T354H226K025AS	
C047	A086013	001.00 EA	CAPACITR 22 MF 25V SOLID TANT	T354H226K025AS	

A459033 ASSY PWB MOTHERBOARD DAS A459033

Revision -
Effective: July 01, 1990

REF	SA PART	Qty	Description	Mfr Part	CAGE
C048	A081109	001.00 EA	CAPACITR 47 MF 20V 10% SOLID TANT POL	T354K476K020AS	
C049	A086013	001.00 EA	CAPACITR 22 MF 25V SOLID TANT	T354H226K025AS	
C050	A086013	001.00 EA	CAPACITR 22 MF 25V SOLID TANT	T354H226K025AS	
C051	A081109	001.00 EA	CAPACITR 47 MF 20V 10% SOLID TANT POL	T354K476K020AS	
C052	A080139	001.00 EA	CAPACITR .1 MF 50V CER MONO -20%/+80%	RPE122Z5U104Z050V	
C053	A080139	001.00 EA	CAPACITR .1 MF 50V CER MONO -20%/+80%	RPE122Z5U104Z050V	
C054	A080139	001.00 EA	CAPACITR .1 MF 50V CER MONO -20%/+80%	RPE122Z5U104Z050V	
C055	A080139	001.00 EA	CAPACITR .1 MF 50V CER MONO -20%/+80%	RPE122Z5U104Z050V	
C056	A080139	001.00 EA	CAPACITR .1 MF 50V CER MONO -20%/+80%	RPE122Z5U104Z050V	
C057	A080139	001.00 EA	CAPACITR .1 MF 50V CER MONO -20%/+80%	RPE122Z5U104Z050V	
C058	A080139	001.00 EA	CAPACITR .1 MF 50V CER MONO -20%/+80%	RPE122Z5U104Z050V	
C059	A080139	001.00 EA	CAPACITR .1 MF 50V CER MONO -20%/+80%	RPE122Z5U104Z050V	
C060	A080139	001.00 EA	CAPACITR .1 MF 50V CER MONO -20%/+80%	RPE122Z5U104Z050V	
C061	A080139	001.00 EA	CAPACITR .1 MF 50V CER MONO -20%/+80%	RPE122Z5U104Z050V	
C062	A080139	001.00 EA	CAPACITR .1 MF 50V CER MONO -20%/+80%	RPE122Z5U104Z050V	
C063	A035654	001.00 EA	CAPACITR 10 MF 25V 10% SOLID TANT	T354E106K025AS	
C064	A035654	001.00 EA	CAPACITR 10 MF 25V 10% SOLID TANT	T354E106K025AS	
C065	A080139	001.00 EA	CAPACITR .1 MF 50V CER MONO -20%/+80%	RPE122Z5U104Z050V	
C066	A078600	000.00 FT	NOT ASSIGNED	FOR ENG ONLY	
DS001	A177167	001.00 EA	LAMP LED YEL REC .1 X .3 2.2V 20MA	HLMP-0400	
DS002	A177167	001.00 EA	LAMP LED YEL REC .1 X .3 2.2V 20MA	HLMP-0400	
J001	A174930	001.00 EA	CONN HDR SGL ROW STR 3-PIN PC MT	MLSS100-3	
J002	A177303	001.00 EA	BARRIER STRIP 8-TERM SGL ROW	17-15-78-9	
J003	A174930	001.00 EA	CONN HDR SGL ROW STR 3-PIN PC MT	MLSS100-3	
J004	A177303	001.00 EA	BARRIER STRIP 8-TERM SGL ROW	17-15-78-9	
J005	A087036	001.00 EA	CONN HEADER DBL ROW STRAIGHT 34-PIN PC MT SHRO	1-103169-5	00779
J006	A087451	001.00 EA	CONN HEADER DBL ROW STRAIGHT 26-PIN PC MT	1-103169-1	00779
J007	A173953	001.00 EA	CONN RECT 9-COND MALE RT ANGLE PC MT	H2M9RA29CP	
J008	A173954	001.00 EA	CONN RECT 25-COND FEMALE RT ANGLE PC MT	H2R25RA29CP	
J009	A173933	001.00 EA	CONNECTR 24 PIN DOUBLE READOUT RT ANG PC MT	552791-1	00779
J010	A087229	001.00 EA	CONN HEADER SGL ROW STRAIGHT 2-PIN PC MT	87220-2	00779
J011	A087229	001.00 EA	CONN HEADER SGL ROW STRAIGHT 2-PIN PC MT	87220-2	00779
J012	A174000	000.00 EA	NOT USED ON THIS ASSEMBLY		
J013	A174000	000.00 EA	NOT USED ON THIS ASSEMBLY		
J014	A174000	000.00 EA	NOT USED ON THIS ASSEMBLY		
J015	A087229	001.00 EA	CONN HEADER SGL ROW STRAIGHT 2-PIN PC MT	87220-2	00779
J016	A087033	001.00 EA	CONN HEADER DBL ROW STRAIGHT 10-PIN PC MT	103168-3	00779
J017	A087419	001.00 EA	CONN HEADER DBL ROW STRAIGHT 16-PIN PC MT	87227-8	00779
J018	A087419	001.00 EA	CONN HEADER DBL ROW STRAIGHT 16-PIN PC MT	87227-8	00779
K001	A177023	001.00 EA	RELAY 5VDC DPDT DIP SEALED	DF2E-DC5V	
L001	A078716	001.00 EA	INDUCTOR 100 UH SUBMIN UNSHLD 10%	IR-2 100UH	
L002	A078716	001.00 EA	INDUCTOR 100 UH SUBMIN UNSHLD 10%	IR-2 100UH	
Q002	A083032	001.00 EA	TRANSSTR 2N2222A NPN SIL	FSC 2N2222A	
Q004	A077147	001.00 EA	TRANSSTR 2N3947 NPN SIL	MOT 2N3947	
RT001	A175463	001.00 EA	THERMSTR 500HM 80DEG C PTC SWG	KTC RL3006-50-80-25-	
R001	A178232	001.00 EA	RESISTOR 499 OHM 1/4W 1% 100PPM MTL FLM	5043ED499R0F	
R002	A178232	001.00 EA	RESISTOR 499 OHM 1/4W 1% 100PPM MTL FLM	5043ED499R0F	
R003	A178232	001.00 EA	RESISTOR 499 OHM 1/4W 1% 100PPM MTL FLM	5043ED499R0F	
R004	A174000	000.00 EA	NOT USED ON THIS ASSEMBLY		
R005	A174000	000.00 EA	NOT USED ON THIS ASSEMBLY		
R006	A174000	000.00 EA	NOT USED ON THIS ASSEMBLY		
R007	A178249	001.00 EA	RESISTOR 2.21K OHM 1/4W 1% 100PPM MTL FLM	5043ED2K210F	
R008	A178249	001.00 EA	RESISTOR 2.21K OHM 1/4W 1% 100PPM MTL FLM	5043ED2K210F	
R009	A178249	001.00 EA	RESISTOR 2.21K OHM 1/4W 1% 100PPM MTL FLM	5043ED2K210F	

A459033 ASSY PWB MOTHERBOARD DAS A459033

Revision -
Effective: July 01, 1990

REF	SA PART	Qty	Description	Mfr Part	CAGE
R010	A178249	001.00 EA	RESISTOR 2.21K OHM 1/4W 1% 100PPM MTL FLM	5043ED2K210F	
R011	A178248	001.00 EA	RESISTOR 2.00K OHM 1/4W 1% 100PPM MTL FLM	5043ED2K000F	
R012	A178231	001.00 EA	RESISTOR 422 OHM 1/4W 1% 100PPM MTL FLM	5043ED422R0F	
R013	A178250	001.00 EA	RESISTOR 2.49K OHM 1/4W 1% 100PPM MTL FLM	5043ED2K490F	
R014	A178248	001.00 EA	RESISTOR 2.00K OHM 1/4W 1% 100PPM MTL FLM	5043ED2K000F	
R015	A178250	001.00 EA	RESISTOR 2.49K OHM 1/4W 1% 100PPM MTL FLM	5043ED2K490F	
R016	A178248	001.00 EA	RESISTOR 2.00K OHM 1/4W 1% 100PPM MTL FLM	5043ED2K000F	
R017	A178250	001.00 EA	RESISTOR 2.49K OHM 1/4W 1% 100PPM MTL FLM	5043ED2K490F	
R018	A178250	001.00 EA	RESISTOR 2.49K OHM 1/4W 1% 100PPM MTL FLM	5043ED2K490F	
R019	A178215	001.00 EA	RESISTOR 100 OHM 1/4W 1% 100PPM MTL FLM	5043ED100R0F	
R020	A178241	001.00 EA	RESISTOR 1.00K OHM 1/4W 1% 100PPM MTL FLM	5043ED1K000F	
R021	A178248	001.00 EA	RESISTOR 2.00K OHM 1/4W 1% 100PPM MTL FLM	5043ED2K000F	
R022	A178257	001.00 EA	RESISTOR 4.42K OHM 1/4W 1% 100PPM MTL FLM	5043ED4K420F	
R023	A074680	001.00 EA	RESISTOR 150 OHM 1W 10% COMP	RCR32G151JS	
R024	A178241	001.00 EA	RESISTOR 1.00K OHM 1/4W 1% 100PPM MTL FLM	5043ED1K000F	
R025	A178258	001.00 EA	RESISTOR 4.75K OHM 1/4W 1% 100PPM MTL FLM	5043ED4K750F	
R026	A178212	001.00 EA	RESISTOR 82.5 OHM 1/4W 1% 100PPM MTL FLM	5043ED82R50F	
R027	A178246	001.00 EA	RESISTOR 1.40K OHM 1/4W 1% 100PPM MTL FLM	5043ED1K400F	
R028	A178253	001.00 EA	RESISTOR 3.65K OHM 1/4W 1% 100PPM MTL FLM	5043ED3K650F	
R029	A178253	001.00 EA	RESISTOR 3.65K OHM 1/4W 1% 100PPM MTL FLM	5043ED3K650F	
R030	A178246	001.00 EA	RESISTOR 1.40K OHM 1/4W 1% 100PPM MTL FLM	5043ED1K400F	
R031	A178310	001.00 EA	RESISTOR 10 OHM 1/4W 1% 100PPM MTL FLM	5043ED10R00F	
R032	A178239	001.00 EA	RESISTOR 806 OHM 1/4W 1% 100PPM MTL FLM	5043ED806R0F	
R033	A178310	001.00 EA	RESISTOR 10 OHM 1/4W 1% 100PPM MTL FLM	5043ED10R00F	
R034	A178232	001.00 EA	RESISTOR 499 OHM 1/4W 1% 100PPM MTL FLM	5043ED499R0F	
SP001	A176977	000.00 EA	ALARM .1-324KHZ 105DB 30VPP MAX	PKD33EP-01R	
S001	A173960	001.00 EA	SWITCH SPST 8 POS DIP RT ANGLE W/ SEAL	206-8RAST	
S002	A173960	001.00 EA	SWITCH SPST 8 POS DIP RT ANGLE W/ SEAL	206-8RAST	
TB001	A328099	001.00 EA	TERMINAL BLOCK PC MT 3-SECTION	7003000	
TP001	A078600	000.00 FT	NOT ASSIGNED	FOR ENG ONLY	
TP002	A082909	001.00 EA	TERMINAL PRESS MT DISCONNECT .058 PIN	60599-1	00779
TP003	A082909	001.00 EA	TERMINAL PRESS MT DISCONNECT .058 PIN	60599-1	00779
TP004	A082909	001.00 EA	TERMINAL PRESS MT DISCONNECT .058 PIN	60599-1	00779
TP005	A082909	001.00 EA	TERMINAL PRESS MT DISCONNECT .058 PIN	60599-1	00779
TP006	A082909	001.00 EA	TERMINAL PRESS MT DISCONNECT .058 PIN	60599-1	00779
TP007	A082909	001.00 EA	TERMINAL PRESS MT DISCONNECT .058 PIN	60599-1	00779
TP008	A082909	001.00 EA	TERMINAL PRESS MT DISCONNECT .058 PIN	60599-1	00779
TP009	A082909	001.00 EA	TERMINAL PRESS MT DISCONNECT .058 PIN	60599-1	00779
TP010	A082909	001.00 EA	TERMINAL PRESS MT DISCONNECT .058 PIN	60599-1	00779
U001	A093980	001.00 EA	IC LINE TRANSCEIVER RS-232	MAX 232CPE	
U002	A093980	001.00 EA	IC LINE TRANSCEIVER RS-232	MAX 232CPE	
U003	A093980	001.00 EA	IC LINE TRANSCEIVER RS-232	MAX 232CPE	
U004	A093980	001.00 EA	IC LINE TRANSCEIVER RS-232	MAX 232CPE	
U005	A174000	000.00 EA	NOT USED ON THIS ASSEMBLY		
U006	A174000	000.00 EA	NOT USED ON THIS ASSEMBLY		
U007	A174000	000.00 EA	NOT USED ON THIS ASSEMBLY		
U008	A086899	001.00 EA	RESISTOR NETWORK 9 3.3K OHM 2% 10 SIP	4310R-101-332	
U009	A173638	001.00 EA	IC BUS TRANSCVR IEEE 488 INTERFACE MULTI	SN75162BN	
U010	A173636	001.00 EA	IC BUS TRANSCVR IEEE 488 INTERFACE	SN75160BN	
U011	A173221	001.00 EA	IC CMOS GATE NAND 2-IN QUAD	NSC MM74HC00N	
U012	A174227	001.00 EA	IC CMOS LATCH 8-BIT ADDRESSABLE	CD74HC259E	
U013	A177272	001.00 EA	IC TTL MLTPLXR 4-B/1-CH TO 1DL	SN74HC253N	
U014	A172458	001.00 EA	IC CMOS FLIP-FLOP TYPE-D DUAL	MM74HC74N	
U015	A083240	001.00 EA	IC COMPARATOR-VOLTAGE 14L-DIP QUAD	UA339PC	

A459033 ASSY PWB MOTHERBOARD DAS A459033

Revision -
Effective: July 01, 1990

REF	SA PART	Qty	Description	Mfr Part	CAGE
U017	A177244	001.00 EA	IC CMOS BFR/LINE DRIVER 10-B INVERT	AM29C828PC	
U018	A078600	001.00 FT	NOT ASSIGNED	FOR ENG ONLY	
U019	A177273	001.00 EA	OSCILTR 6.176MHZ TCXO ECL OUT	03-01994-003	
U020	A078600	000.00 FT	NOT ASSIGNED	FOR ENG ONLY	
U021	A172319	001.00 EA	IC VOLTAGE REFERENCE 2.5V	AD1403N	
U022	A306194	001.00 EA	ASSY PAL U22 MOTHERBOARD DAS	PAL U22	
U023	A306196	001.00 EA	ASSY PAL U23 MOTHERBOARD DAS	PAL U23	
U024	A087092	001.00 EA	RESISTOR NETWORK 9 22K OHM 2% 10 SIP	BLI 4310R-101-223	
U025	A089523	001.00 EA	RESISTOR NETWORK 5 22K OHM 2% 6 SIP	BLI 4306R-101-223	
U026	A174293	001.00 EA	IC CMOS SCHMITT TRIGGER-INV	MOT SN74HC14N	
XA011	A173711	001.00 EA	CONN RECT 96-COND FEM PNL MT STRAIGHT PC MT	532504-1	00779
XA012	A173711	001.00 EA	CONN RECT 96-COND FEM PNL MT STRAIGHT PC MT	532504-1	00779
XA021	A173711	001.00 EA	CONN RECT 96-COND FEM PNL MT STRAIGHT PC MT	532504-1	00779
XA022	A173711	001.00 EA	CONN RECT 96-COND FEM PNL MT STRAIGHT PC MT	532504-1	00779
XA031	A173711	001.00 EA	CONN RECT 96-COND FEM PNL MT STRAIGHT PC MT	532504-1	00779
XA032	A173711	001.00 EA	CONN RECT 96-COND FEM PNL MT STRAIGHT PC MT	532504-1	00779
XA041	A173711	001.00 EA	CONN RECT 96-COND FEM PNL MT STRAIGHT PC MT	532504-1	00779
XA042	A173711	001.00 EA	CONN RECT 96-COND FEM PNL MT STRAIGHT PC MT	532504-1	00779
XA051	A173711	001.00 EA	CONN RECT 96-COND FEM PNL MT STRAIGHT PC MT	532504-1	00779
XA052	A173711	001.00 EA	CONN RECT 96-COND FEM PNL MT STRAIGHT PC MT	532504-1	00779
XA061	A173711	001.00 EA	CONN RECT 96-COND FEM PNL MT STRAIGHT PC MT	532504-1	00779
XA062	A173711	001.00 EA	CONN RECT 96-COND FEM PNL MT STRAIGHT PC MT	532504-1	00779
XA071	A173711	001.00 EA	CONN RECT 96-COND FEM PNL MT STRAIGHT PC MT	532504-1	00779
XA072	A173711	001.00 EA	CONN RECT 96-COND FEM PNL MT STRAIGHT PC MT	532504-1	00779
XA081	A173711	001.00 EA	CONN RECT 96-COND FEM PNL MT STRAIGHT PC MT	532504-1	00779
XA082	A173711	001.00 EA	CONN RECT 96-COND FEM PNL MT STRAIGHT PC MT	532504-1	00779
XA091	A173711	001.00 EA	CONN RECT 96-COND FEM PNL MT STRAIGHT PC MT	532504-1	00779
XA092	A173711	001.00 EA	CONN RECT 96-COND FEM PNL MT STRAIGHT PC MT	532504-1	00779
XA101	A173711	001.00 EA	CONN RECT 96-COND FEM PNL MT STRAIGHT PC MT	532504-1	00779
XA102	A173711	001.00 EA	CONN RECT 96-COND FEM PNL MT STRAIGHT PC MT	532504-1	00779
XA111	A173711	001.00 EA	CONN RECT 96-COND FEM PNL MT STRAIGHT PC MT	532504-1	00779
XA112	A173711	001.00 EA	CONN RECT 96-COND FEM PNL MT STRAIGHT PC MT	532504-1	00779
XA121	A173711	001.00 EA	CONN RECT 96-COND FEM PNL MT STRAIGHT PC MT	532504-1	00779
XA122	A173711	001.00 EA	CONN RECT 96-COND FEM PNL MT STRAIGHT PC MT	532504-1	00779
XA131	A173711	001.00 EA	CONN RECT 96-COND FEM PNL MT STRAIGHT PC MT	532504-1	00779
XA132	A173711	001.00 EA	CONN RECT 96-COND FEM PNL MT STRAIGHT PC MT	532504-1	00779
XA141	A173711	001.00 EA	CONN RECT 96-COND FEM PNL MT STRAIGHT PC MT	532504-1	00779
XA142	A173711	001.00 EA	CONN RECT 96-COND FEM PNL MT STRAIGHT PC MT	532504-1	00779
XA151	A173711	001.00 EA	CONN RECT 96-COND FEM PNL MT STRAIGHT PC MT	532504-1	00779
XA152	A173711	001.00 EA	CONN RECT 96-COND FEM PNL MT STRAIGHT PC MT	532504-1	00779
XA153	A176975	001.00 EA	CONN RECT 48 COND FEM STRAIGHT PC MT	535071-4	00779
XU001	A086649	001.00 EA	SOCKET 16 PIN DIP PC MT	ICT-163-S-TT	
XU002	A086649	001.00 EA	SOCKET 16 PIN DIP PC MT	ICT-163-S-TT	
XU003	A086649	001.00 EA	SOCKET 16 PIN DIP PC MT	ICT-163-S-TT	
XU004	A086649	001.00 EA	SOCKET 16 PIN DIP PC MT	ICT-163-S-TT	
XU005	A078600	000.00 FT	NOT ASSIGNED	FOR ENG ONLY	
XU006	A078600	000.00 FT	NOT ASSIGNED	FOR ENG ONLY	
XU007	A078600	000.00 FT	NOT ASSIGNED	FOR ENG ONLY	
XU009	A089605	001.00 EA	SOCKET 22 PIN DIP PC MT	RBN ICT-224-S-TG	
XU010	A086897	001.00 EA	SOCKET 20 PIN DIP PC MT	RBN ICT-203-S-TG	
XU011	A086648	001.00 EA	SOCKET 14 PIN DIP PC MT	RBN ICT-143-S-TG30	
XU012	A086649	001.00 EA	SOCKET 16 PIN DIP PC MT	ICT-163-S-TT	
XU013	A086649	001.00 EA	SOCKET 16 PIN DIP PC MT	ICT-163-S-TT	
XU014	A086648	001.00 EA	SOCKET 14 PIN DIP PC MT	RBN ICT-143-S-TG30	

A459033 ASSY PWB MOTHERBOARD DAS A459033

Revision -
Effective: July 01, 1990

REF	SA PART	Qty	Description	Mfr Part	CAGE
XU015	A086648	001.00 EA	SOCKET 14 PIN DIP PC MT	RBN ICT-143-S-TG30	
XU017	A173737	001.00 EA	SOCKET 24 PIN DIP PC MT LOW PROFILE OPEN UL94V	610-24-CC-D	
XU021	A087983	001.00 EA	SOCKET 8 PIN DIP PC MT	RBN ICT-083-S-TG30	
XU022	A173737	001.00 EA	SOCKET 24 PIN DIP PC MT LOW PROFILE OPEN UL94V	610-24-CC-D	
XU023	A173737	001.00 EA	SOCKET 24 PIN DIP PC MT LOW PROFILE OPEN UL94V	610-24-CC-D	
XU026	A086648	001.00 EA	SOCKET 14 PIN DIP PC MT	RBN ICT-143-S-TG30	
Z001	A456237	001.00 EA	ASSY TERMINATION HYBRID HYBT	PER SA DWG.	
Z002	A456237	001.00 EA	ASSY TERMINATION HYBRID HYBT	PER SA DWG.	
Z003	A456237	001.00 EA	ASSY TERMINATION HYBRID HYBT	PER SA DWG.	
Z004	A456237	001.00 EA	ASSY TERMINATION HYBRID HYBT	PER SA DWG.	
Z005	A456237	001.00 EA	ASSY TERMINATION HYBRID HYBT	PER SA DWG.	
Z006	A456237	001.00 EA	ASSY TERMINATION HYBRID HYBT	PER SA DWG.	
Z007	A456237	001.00 EA	ASSY TERMINATION HYBRID HYBT	PER SA DWG.	
Z008	A456237	001.00 EA	ASSY TERMINATION HYBRID HYBT	PER SA DWG.	
Z009	A456237	001.00 EA	ASSY TERMINATION HYBRID HYBT	PER SA DWG.	
Z010	A456237	001.00 EA	ASSY TERMINATION HYBRID HYBT	PER SA DWG.	
Z011	A456237	001.00 EA	ASSY TERMINATION HYBRID HYBT	PER SA DWG.	
Z012	A456237	001.00 EA	ASSY TERMINATION HYBRID HYBT	PER SA DWG.	
001	A459035	001.00 EA	PWB MOTHERBOARD DAS	PER SA DWG. 459035 O	
002	A177177	002.00 EA	TERMNL QUICK DISC 20-16FEM.187	AMP 42638-2	

A459041 ASSY PWB CPU DAS A459041

Revision D
Effective: January 21, 1992

REF	SA PART	Qty	Description	Mfr Part	CAGE
U044	A458370	001.00 EA	ASSY PAL PROGRAM U44 CPU	PER SA DWG 458370	10110
U053	A458371	001.00 EA	ASSY PAL PROGRAM U53 CPU		
U054	A458372	001.00 EA	ASSY PAL PROGRAM U54 CPU	PER SA DWG 458372	10110
U055	A458373	001.00 EA	ASSY PAL PROGRAM U55 CPU	PER SA DWG 458373	10110
U056	A458374	001.00 EA	ASSY PAL PROGRAM U56 CPU		
001	A307218	001.00 EA	SUB-ASSY PWB CPU DTA		
002	A489756	001.00 EA	EPROM ASSEMBLY,CPU 9000	PER SA DWG 489756	42061

A306178 ASSY PWB POWER SUPPLY AC DAS A306178

Revision B
Effective: July 01, 1990

REF	SA PART	Qty	Description	Mfr Part	CAGE
	A327909	000.00 EA	SCHEMATIC POWER SUPPLY DTA	PER SA DWG 327909	
CR001	A174000	000.00 EA	NOT USED ON THIS ASSEMBLY		
CR002	A174000	000.00 EA	NOT USED ON THIS ASSEMBLY		
CR003	A174000	000.00 EA	NOT USED ON THIS ASSEMBLY		
CR004	A174000	000.00 EA	NOT USED ON THIS ASSEMBLY		
CR005	A078274	001.00 EA	DIODE 1N4002 SIL 100V 1A	1N4002	
CR006	A078274	001.00 EA	DIODE 1N4002 SIL 100V 1A	1N4002	
CR007	A077488	001.00 EA	DIODE 1N4737A SI ZEN 7.5V 5% 1W	FSC 1N4737A	
CR008	A177283	001.00 EA	RECTIFIER ASSY 600V 6A	GI KBU8J	
C001	A075417	001.00 EA	CAPACITR .01 MF 150V CER DISC Z5V-40+60%	CEN DDM-103	
C002	A070544	001.00 EA	CAPACITR .001 MF 1KV CER DISC Z5F 10%	DD102	
C003	A075417	001.00 EA	CAPACITR .01 MF 150V CER DISC Z5V-40+60%	CEN DDM-103	
C004	A070544	001.00 EA	CAPACITR .001 MF 1KV CER DISC Z5F 10%	DD102	
C005	A174000	000.00 EA	NOT USED ON THIS ASSEMBLY		
C006	A174000	000.00 EA	NOT USED ON THIS ASSEMBLY		
C007	A174000	000.00 EA	NOT USED ON THIS ASSEMBLY		
C008	A174000	000.00 EA	NOT USED ON THIS ASSEMBLY		
C009	A174000	000.00 EA	NOT USED ON THIS ASSEMBLY		
C010	A174000	000.00 EA	NOT USED ON THIS ASSEMBLY		
C011	A177093	001.00 EA	CAPACITOR 470MF 200V RDL LEADS	SP 80D471P200MB5	
C012	A081101	001.00 EA	CAPACITR 1 MF 50V CER MONO 20%	RPE113Z5U105M50V	
C013	A081101	001.00 EA	CAPACITR 1 MF 50V CER MONO 20%	RPE113Z5U105M50V	
C014	A174000	000.00 EA	NOT USED ON THIS ASSEMBLY		
C015	A086013	001.00 EA	CAPACITR 22 MF 25V SOLID TANT	T354H226K025AS	
C016	A177093	001.00 EA	CAPACITOR 470MF 200V RDL LEADS	SP 80D471P200MB5	
C017	A170263	001.00 EA	CAPACITR 100 MF 20V	SP 672D107H020CG5C	
C018	A170263	001.00 EA	CAPACITR 100 MF 20V	SP 672D107H020CG5C	
C019	A080139	001.00 EA	CAPACITR .1 MF 50V CER MONO -20%/+80%	RPE122Z5U104Z050V	
C020	A080139	001.00 EA	CAPACITR .1 MF 50V CER MONO -20%/+80%	RPE122Z5U104Z050V	
C021	A070544	001.00 EA	CAPACITR .001 MF 1KV CER DISC Z5F 10%	DD102	
C022	A070544	001.00 EA	CAPACITR .001 MF 1KV CER DISC Z5F 10%	DD102	
C023	A174000	000.00 EA	NOT USED ON THIS ASSEMBLY		
DS001	A171535	001.00 EA	LAMP LED GRN .115 DIA..135 LNG 2.5V 30MA	HLMP 1523	
DS002	A171535	001.00 EA	LAMP LED GRN .115 DIA..135 LNG 2.5V 30MA	HLMP 1523	
J001	A078600	000.00 FT	NOT ASSIGNED	FOR ENG ONLY	
J002	A174000	000.00 EA	NOT USED ON THIS ASSEMBLY		
J003	A177171	001.00 EA	CONN HDR SNGL RW STR 12PIN.156	MMM #CLN-1012-1CA10-	
K001	A177095	001.00 EA	RELAY 6VDC DPDT PC MT 10A CNC	TYP154-2C-6VDC	
L001	A174000	000.00 EA	NOT USED ON THIS ASSEMBLY		
L002	A174000	000.00 EA	NOT USED ON THIS ASSEMBLY		
L003	A327919	001.00 EA	INDUCTOR POWER TOROIDAL	PER SA DWG.	
L004	A327919	001.00 EA	INDUCTOR POWER TOROIDAL	PER SA DWG.	
P001	A174928	001.00 EA	CONN RECT M T 3 POS 22AWG .100	CE100F 22-3	
Q001	A077148	001.00 EA	TRANSSTR 2N3251 PNP SIL	2N3251	
Q002	A077148	001.00 EA	TRANSSTR 2N3251 PNP SIL	2N3251	
Q003	A077147	001.00 EA	TRANSSTR 2N3947 NPN SIL	MOT 2N3947	
Q004	A077147	001.00 EA	TRANSSTR 2N3947 NPN SIL	MOT 2N3947	
RT001	A174000	000.00 EA	NOT USED ON THIS ASSEMBLY		
RT002	A175602	001.00 EA	THERMSTR 47 OHM DISC 25 DEG C	KTC CL-80	
RV001	A081844	001.00 EA	VARISTOR 150V RMS .5 WATTS	GE V150-LA10A	
RV002	A081844	001.00 EA	VARISTOR 150V RMS .5 WATTS	GE V150-LA10A	
R001	A074696	001.00 EA	RESISTOR 470 OHM 1/4W 5% COMP	CR07G471JS	
R002	A074696	001.00 EA	RESISTOR 470 OHM 1/4W 5% COMP	CR07G471JS	
R003	A078924	001.00 EA	RESISTOR 20.0K OHM RN55C 1% MTL FLM	RN55C2002F	
R004	A078933	001.00 EA	RESISTOR 10.0K OHM RN55C 1% MTL FLM	DP RN55C1002F T&R	

A306178 ASSY PWB POWER SUPPLY AC DAS A306178

Revision B
Effective: July 01, 1990

REF	SA PART	Qty	Description	Mfr Part	CAGE
R005	A072080	001.00 EA	RESISTOR 47K OHM 2W 10% COMP	RCR42G473JS	
R006	A174000	000.00 EA	NOT USED ON THIS ASSEMBLY		
R007	A174000	000.00 EA	NOT USED ON THIS ASSEMBLY		
R008	A079728	001.00 EA	RESISTOR 9.09K OHM RN55C 1% MTL FLM	DP RN55C9091F	
R009	A087840	001.00 EA	POT 10K OHM 1/2W CER 3/8 SQ VERT ADJ 25T	3299W-1-1003	
R010	A085790	001.00 EA	RESISTOR 330K OHM 1/4W 5% COMP	RCR07G334JS	
R011	A174000	000.00 EA	NOT USED ON THIS ASSEMBLY		
R012	A174000	000.00 EA	NOT USED ON THIS ASSEMBLY		
R013	A079728	001.00 EA	RESISTOR 9.09K OHM RN55C 1% MTL FLM	DP RN55C9091F	
R014	A087840	001.00 EA	POT 10K OHM 1/2W CER 3/8 SQ VERT ADJ 25T	3299W-1-1003	
R015	A085793	001.00 EA	RESISTOR 560K OHM 1/4W 5% COMP	RCR07G564JS	
R016	A074702	001.00 EA	RESISTOR 1.0K OHM 1/4W 5% COMP	RCR07G102JS	
R017	A074724	001.00 EA	RESISTOR 6.8K OHM 1/4W 5% COMP	RCR07G682JS	
R018	A085790	001.00 EA	RESISTOR 330K OHM 1/4W 5% COMP	RCR07G334JS	
R019	A078933	001.00 EA	RESISTOR 10.0K OHM RN55C 1% MTL FLM	DP RN55C1002F T&R	
R020	A072080	001.00 EA	RESISTOR 47K OHM 2W 10% COMP	RCR42G473JS	
R021	A075687	001.00 EA	RESISTOR 47K OHM 1/4W 5% COMP	AB-RCR07G473JS	
R022	A075686	001.00 EA	RESISTOR 39K OHM 2W 10% COMP	RCR42G393KS	
R023	A075686	001.00 EA	RESISTOR 39K OHM 2W 10% COMP	RCR42G393KS	
R024	A071859	001.00 EA	RESISTOR 33 OHM 1W 10% COMP	RCR32G330KS	
R025	A074722	001.00 EA	RESISTOR 4.7K OHM 1/4W 5% COMP	RCR07G472JS	
R026	A083029	001.00 EA	RESISTOR 249K OHM RN55C 1% MTL FLM	XZ RN55C2493F	
R027	A083029	001.00 EA	RESISTOR 249K OHM RN55C 1% MTL FLM	XZ RN55C2493F	
R028	A083029	001.00 EA	RESISTOR 249K OHM RN55C 1% MTL FLM	XZ RN55C2493F	
R029	A083029	001.00 EA	RESISTOR 249K OHM RN55C 1% MTL FLM	XZ RN55C2493F	
R030	A071839	001.00 EA	RESISTOR 10 OHM 2W 10% COMP	RCR42G100KS	
R031	A174000	000.00 EA	NOT USED ON THIS ASSEMBLY		
R032	A083876	001.00 EA	RESISTOR 499 OHM RN55C 1% MTL FLM	XZ RN55C 4990F	
R033	A083878	001.00 EA	RESISTOR 562 OHM RN55C 1% MTL FLM	DP RN55C5620F	
TP003	A082909	001.00 EA	TERMINAL PRESS MT DISCONNECT .058 PIN	60599-1	00779
U001	A177348	001.00 EA	CKT MOD CONV 200-400VDCIN 50CO	LM260CV	
U002	A177348	001.00 EA	CKT MOD CONV 200-400VDCIN 50CO	LM260CV	
U003	A174000	000.00 EA	NOT USED ON THIS ASSEMBLY		
U004	A172179	001.00 EA	IC COMPARATOR - VOLTAGE 8L - DIP DUAL	LM393N	
U005	A174715	001.00 EA	OPTO-ISOLA 3.55KVDC NPN PXSTR	GE 4N35	
001	A327910	001.00 EA	PWB POWER SUPPY DTA	PER SA DWG. 327910 O	
002	A073317	000.10 FT	WIRE 20 BUS	LAN #L20S 100/SPLS	
003	A306179	001.00 EA	LABEL ASSY NO POWER SUPPLY DAS		
004	A175172	006.00 EA	SPACER .143 ID 9/32 OD 1/2 L	PNN KFSE-143-16	
005	A177129	002.00 EA	SPACER.1431D 9/32 OD 5/8LNGBR	PNN KFSE-143-20	
006	A078645	000.60 FT	GROMMET STRIP F/.037-.105 PNL THK POLTHN	RIC PGS-2	
007	A174929	001.00 EA	CONN RECT M T COV FOR 3 P .100	PAN EC 100F-3	
008	A073045	001.00 EA	CABLE TIE - MINIATURE - 4 IN. LONG	PAN PLT1M-M	
009	A073339	001.08 FT	WIRE 16 STRANDED VIOLET	LAN#LC16-1929 VIOLET	
010	A073334	002.08 FT	WIRE 16 STRANDED BLACK	LAN #LC16-1929 BLK	
011	A073336	002.45 FT	WIRE 16 STRANDED RED	LAN #LC16-1929 RED	
012	A073394	000.67 FT	WIRE 22 STRANDED WHITE	LAN #LB22-1934 WHITE	

A306187 ASSY POWER SUPPLY AC DAS A306187

Revision -
Effective: July 01, 1990

REF	SA PART	Qty	Description	Mfr Part	CAGE
001	A328062	001.00 EA	ENCLOSURE POWER SUPPLY	PER SA DESC	
002	A306178	001.00 EA	ASSY PWB POWER SUPPLY AC DAS		
003	A328083	001.00 EA	HEATSINK POWER SUPPLY	PER SA DWG.	
004	A078600	000.00 FT	NOT ASSIGNED	FOR ENG ONLY	
005	A078600	000.00 FT	NOT ASSIGNED	FOR ENG ONLY	
006	A306201	001.00 EA	THERMAL PAD NON-INSUL 4.6X7.35	BERQ PER SA DWG 306	
007	A075775	008.00 EA	SCREW 6-32 X 1 SOC CAP SST	BY DESCRIPTION	
008	A174555	008.00 EA	WASHER NO. 6 LOCK, SPLIT, SST	ATY PER DESC 174555	
009	A328060	001.00 EA	COVER, POWER SUPPLY	PER SA DESC	
010	A072350	001.00 EA	SCREW 6-32 X 1/4 PAN HD,SST	ATY MS51957-26	
011	A073269	001.00 EA	WASHER NO. 6 LOCK EXT TOOTH CAD PLT STL	PER ANSI B.18.21.1	
012	A174651	000.03 PD	LABEL DANGER HIGH VOLTAGE 1 1/2X3 3/16	PAN PSSB-13	

A307219 ASSY PWB CPU DTA A307219

Revision R
Effective: December 12, 1991

REF	SA PART	Qty	Description	Mfr Part	CAGE
U044	A458370	001.00 EA	ASSY PAL PROGRAM U44 CPU	PER SA DWG 458370	10110
U053	A458371	001.00 EA	ASSY PAL PROGRAM U53 CPU		
U054	A458372	001.00 EA	ASSY PAL PROGRAM U54 CPU	PER SA DWG 458372	10110
U055	A458373	001.00 EA	ASSY PAL PROGRAM U55 CPU	PER SA DWG 458373	10110
U056	A458374	001.00 EA	ASSY PAL PROGRAM U56 CPU		
001	A307218	001.00 EA	SUB-ASSY PWB CPU DTA		
002	A487605	001.00 EA	EPROM ASSEMBLY,CPU AT9500	PER SA DWG 487605	42061

A327887 SUB-ASSY PWB RTC DTA A327887

Revision H
Effective: July 01, 1990

REF	SA PART	Qty	Description	Mfr Part	CAGE
	A327885	000.00 EA	SCHEMATIC RTC DTA		
BT001	A306233	001.00 EA	BATTERY NI-CAD 3.6V 100MA HRS	VARTA 100DKO	
C001	A083649	001.00 EA	CAPACITR 7-25 PF MIN CER DISC PC MT	538-011-B-7-25	
C002	A070470	001.00 EA	CAPACITR 10 PF 500V SILVER MICA 5%	CD15CD100J03	
C003	A035654	001.00 EA	CAPACITR 10 MF 25V 10% SOLID TANT	T354E106K025AS	
C004	A080139	001.00 EA	CAPACITR .1 MF 50V CER MONO -20%/+80%	RPE122Z5U104Z050V	
C005	A080139	001.00 EA	CAPACITR .1 MF 50V CER MONO -20%/+80%	RPE122Z5U104Z050V	
C006	A035654	001.00 EA	CAPACITR 10 MF 25V 10% SOLID TANT	T354E106K025AS	
C007	A035654	001.00 EA	CAPACITR 10 MF 25V 10% SOLID TANT	T354E106K025AS	
C008	A080139	001.00 EA	CAPACITR .1 MF 50V CER MONO -20%/+80%	RPE122Z5U104Z050V	
C009	A080139	001.00 EA	CAPACITR .1 MF 50V CER MONO -20%/+80%	RPE122Z5U104Z050V	
C010	A080139	001.00 EA	CAPACITR .1 MF 50V CER MONO -20%/+80%	RPE122Z5U104Z050V	
C011	A080139	001.00 EA	CAPACITR .1 MF 50V CER MONO -20%/+80%	RPE122Z5U104Z050V	
C012	A080139	001.00 EA	CAPACITR .1 MF 50V CER MONO -20%/+80%	RPE122Z5U104Z050V	
C013	A080139	001.00 EA	CAPACITR .1 MF 50V CER MONO -20%/+80%	RPE122Z5U104Z050V	
C014	A080139	001.00 EA	CAPACITR .1 MF 50V CER MONO -20%/+80%	RPE122Z5U104Z050V	
C015	A080139	001.00 EA	CAPACITR .1 MF 50V CER MONO -20%/+80%	RPE122Z5U104Z050V	
C016	A080139	001.00 EA	CAPACITR .1 MF 50V CER MONO -20%/+80%	RPE122Z5U104Z050V	
C017	A080139	001.00 EA	CAPACITR .1 MF 50V CER MONO -20%/+80%	RPE122Z5U104Z050V	
C018	A078600	000.00 FT	NOT ASSIGNED	FOR ENG ONLY	
C019	A078600	000.00 FT	NOT ASSIGNED	FOR ENG ONLY	
C020	A078600	000.00 FT	NOT ASSIGNED	FOR ENG ONLY	
C021	A078600	000.00 FT	NOT ASSIGNED	FOR ENG ONLY	
C022	A078600	000.00 FT	NOT ASSIGNED	FOR ENG ONLY	
C023	A078600	000.00 FT	NOT ASSIGNED	FOR ENG ONLY	
C024	A078600	000.00 FT	NOT ASSIGNED	FOR ENG ONLY	
C025	A080139	001.00 EA	CAPACITR .1 MF 50V CER MONO -20%/+80%	RPE122Z5U104Z050V	
C026	A078600	000.00 FT	NOT ASSIGNED	FOR ENG ONLY	
C027	A080139	001.00 EA	CAPACITR .1 MF 50V CER MONO -20%/+80%	RPE122Z5U104Z050V	
C028	A080139	001.00 EA	CAPACITR .1 MF 50V CER MONO -20%/+80%	RPE122Z5U104Z050V	
C029	A080139	001.00 EA	CAPACITR .1 MF 50V CER MONO -20%/+80%	RPE122Z5U104Z050V	
C030	A080139	001.00 EA	CAPACITR .1 MF 50V CER MONO -20%/+80%	RPE122Z5U104Z050V	
C031	A080139	001.00 EA	CAPACITR .1 MF 50V CER MONO -20%/+80%	RPE122Z5U104Z050V	
C032	A080139	001.00 EA	CAPACITR .1 MF 50V CER MONO -20%/+80%	RPE122Z5U104Z050V	
C033	A080139	001.00 EA	CAPACITR .1 MF 50V CER MONO -20%/+80%	RPE122Z5U104Z050V	
C034	A070540	001.00 EA	CAPACITR 470 PF 1KV CER DISC 25F 10%	DD471	
C035	A080139	001.00 EA	CAPACITR .1 MF 50V CER MONO -20%/+80%	RPE122Z5U104Z050V	
C036	A080139	001.00 EA	CAPACITR .1 MF 50V CER MONO -20%/+80%	RPE122Z5U104Z050V	
C037	A080139	001.00 EA	CAPACITR .1 MF 50V CER MONO -20%/+80%	RPE122Z5U104Z050V	
C038	A080139	001.00 EA	CAPACITR .1 MF 50V CER MONO -20%/+80%	RPE122Z5U104Z050V	
C039	A080139	001.00 EA	CAPACITR .1 MF 50V CER MONO -20%/+80%	RPE122Z5U104Z050V	
C040	A080139	001.00 EA	CAPACITR .1 MF 50V CER MONO -20%/+80%	RPE122Z5U104Z050V	
C041	A080139	001.00 EA	CAPACITR .1 MF 50V CER MONO -20%/+80%	RPE122Z5U104Z050V	
C042	A035654	001.00 EA	CAPACITR 10 MF 25V 10% SOLID TANT	T354E106K025AS	
C043	A080139	001.00 EA	CAPACITR .1 MF 50V CER MONO -20%/+80%	RPE122Z5U104Z050V	
C044	A080139	001.00 EA	CAPACITR .1 MF 50V CER MONO -20%/+80%	RPE122Z5U104Z050V	
C045	A080139	001.00 EA	CAPACITR .1 MF 50V CER MONO -20%/+80%	RPE122Z5U104Z050V	
DS001	A177211	001.00 EA	LAMP LED-RSTR RED PC MT 5V 3MA	555-2007	
DS002	A177211	001.00 EA	LAMP LED-RSTR RED PC MT 5V 3MA	555-2007	
DS003	A177211	001.00 EA	LAMP LED-RSTR RED PC MT 5V 3MA	555-2007	
DS004	A177211	001.00 EA	LAMP LED-RSTR RED PC MT 5V 3MA	555-2007	
DS005	A177211	001.00 EA	LAMP LED-RSTR RED PC MT 5V 3MA	555-2007	
DS006	A177211	001.00 EA	LAMP LED-RSTR RED PC MT 5V 3MA	555-2007	
DS007	A177211	001.00 EA	LAMP LED-RSTR RED PC MT 5V 3MA	555-2007	
E001	A177971	001.00 EA	CHOKE WIDE-BAND 3B .236X394L	VK20009-3B	

A327887 SUB-ASSY PWB RTC DTA A327887

Revision H
Effective: July 01, 1990

REF	SA PART	Qty	Description	Mfr Part	CAGE
E002	A177971	001.00 EA	CHOKE WIDE-BAND 3B .236X394L	VK20009-3B	
E003	A177971	001.00 EA	CHOKE WIDE-BAND 3B .236X394L	VK20009-3B	
J001	A173712	001.00 EA	CONN RECT 96-COND MALE PNL MT RT ANG PC MT	532505-1	00779
J002	A173712	001.00 EA	CONN RECT 96-COND MALE PNL MT RT ANG PC MT	532505-1	00779
J003	A176974	001.00 EA	CONN RECT 48-COND MALE RT ANG PC MT	10-8457-048-002-025	
J004	A172726	001.00 EA	CONN HEADER SGL ROW RT ANG 2-PIN PC MT	640099-2	00779
J005	A078600	000.00 FT	NOT ASSIGNED	FOR ENG ONLY	
J006	A087229	001.00 EA	CONN HEADER SGL ROW STRAIGHT 2-PIN PC MT	87220-2	00779
J007	A078600	000.00 FT	NOT ASSIGNED	FOR ENG ONLY	
J008	A078600	000.00 FT	NOT ASSIGNED	FOR ENG ONLY	
J009	A078600	000.00 FT	NOT ASSIGNED	FOR ENG ONLY	
J010	A078600	000.00 FT	NOT ASSIGNED	FOR ENG ONLY	
J011	A078600	000.00 FT	NOT ASSIGNED	FOR ENG ONLY	
J012	A174000	000.00 EA	NOT USED ON THIS ASSEMBLY		
J013	A177177	002.00 EA	TERMNL QUICK DISC 20-16FEM.187	AMP 42638-2	
P004	A086884	001.00 EA	JUMPER FEMALE INSULATED .10 SPACING	65474-004	
P006	A086884	001.00 EA	JUMPER FEMALE INSULATED .10 SPACING	65474-004	
Q001	A077147	001.00 EA	TRANSSTR 2N3947 NPN SIL	MOT 2N3947	
Q002	A077148	001.00 EA	TRANSSTR 2N3251 PNP SIL	2N3251	
Q003	A083033	001.00 EA	TRANSSTR 2N2907A PNP SIL	MOS 2N2907A	
Q004	A077147	001.00 EA	TRANSSTR 2N3947 NPN SIL	MOT 2N3947	
Q005	A177028	001.00 EA	TRANSSTR 2N7000 FET N-CHNL	SILX #2N7000	
R001	A071989	001.00 EA	RESISTOR 3.3K OHM 1/4W 10% COMP	RCR07G332KS	
R001	A074714	001.00 EA	RESISTOR 3.3K OHM 1/4W 5% COMP	CR07G332JS	
R002	A074722	001.00 EA	RESISTOR 4.7K OHM 1/4W 5% COMP	RCR07G472JS	
R003	A074714	001.00 EA	RESISTOR 3.3K OHM 1/4W 5% COMP	CR07G332JS	
R003	A071989	001.00 EA	RESISTOR 3.3K OHM 1/4W 10% COMP	RCR07G332KS	
R004	A078600	000.00 FT	NOT ASSIGNED	FOR ENG ONLY	
R005	A078600	000.00 FT	NOT ASSIGNED	FOR ENG ONLY	
R006	A074722	001.00 EA	RESISTOR 4.7K OHM 1/4W 5% COMP	RCR07G472JS	
R007	A084265	001.00 EA	RESISTOR 100K OHM 1/4W 5% COMP	RCR07G104JS	
R008	A081341	001.00 EA	RESISTOR 22 MEG 1/4W 10% COMP	RCR07G226KS	
R009	A081733	001.00 EA	RESISTOR 750 OHM 1/4W 5% COMP	RCR07G751JS	
R010	A074722	001.00 EA	RESISTOR 4.7K OHM 1/4W 5% COMP	RCR07G472JS	
R011	A074727	001.00 EA	RESISTOR 10K OHM 1/4W 5% COMP	RCR07G103JS	
R012	A074675	001.00 EA	RESISTOR 100 OHM 1/4W 5% COMP	CR07G101JS	
R013	A084265	001.00 EA	RESISTOR 100K OHM 1/4W 5% COMP	RCR07G104JS	
R014	A074710	001.00 EA	RESISTOR 2.2K OHM 1/4W 5% COMP	RCR07G222JS	
R015	A077672	001.00 EA	RESISTOR 33K OHM 1/4W 5% COMP	RCR07G333JS	
R016	A074722	001.00 EA	RESISTOR 4.7K OHM 1/4W 5% COMP	RCR07G472JS	
R017	A074722	001.00 EA	RESISTOR 4.7K OHM 1/4W 5% COMP	RCR07G472JS	
R018	A074722	001.00 EA	RESISTOR 4.7K OHM 1/4W 5% COMP	RCR07G472JS	
R019	A074727	001.00 EA	RESISTOR 10K OHM 1/4W 5% COMP	RCR07G103JS	
R020	A074702	001.00 EA	RESISTOR 1.0K OHM 1/4W 5% COMP	RCR07G102JS	
R021	A074722	001.00 EA	RESISTOR 4.7K OHM 1/4W 5% COMP	RCR07G472JS	
R022	A074706	001.00 EA	RESISTOR 1.5K OHM 1/4W 5% COMP	RCR07G152JS	
R023	A078600	000.00 FT	NOT ASSIGNED	FOR ENG ONLY	
R024	A074702	001.00 EA	RESISTOR 1.0K OHM 1/4W 5% COMP	RCR07G102JS	
R025	A078600	000.00 FT	NOT ASSIGNED	FOR ENG ONLY	
R026	A078600	000.00 FT	NOT ASSIGNED	FOR ENG ONLY	
R027	A074722	001.00 EA	RESISTOR 4.7K OHM 1/4W 5% COMP	RCR07G472JS	
R028	A074722	001.00 EA	RESISTOR 4.7K OHM 1/4W 5% COMP	RCR07G472JS	
R029	A074722	001.00 EA	RESISTOR 4.7K OHM 1/4W 5% COMP	RCR07G472JS	
R030	A078600	000.00 FT	NOT ASSIGNED	FOR ENG ONLY	

A327887 SUB-ASSY PWB RTC DTA A327887

Revision H
Effective: July 01, 1990

REF	SA PART	Qty	Description	Mfr Part	CAGE
R031	A074722	001.00 EA	RESISTOR 4.7K OHM 1/4W 5% COMP	RCR07G472JS	
R032	A074722	001.00 EA	RESISTOR 4.7K OHM 1/4W 5% COMP	RCR07G472JS	
R033	A074702	001.00 EA	RESISTOR 1.0K OHM 1/4W 5% COMP	RCR07G102JS	
R034	A083902	001.00 EA	RESISTOR 3.01K OHM RN55C 1% MTL FLM	DP RN55C3011F	
R035	A079713	001.00 EA	RESISTOR 2.00K OHM RN55C 1% MTL FLM	XZ RN55C2001F	
R036	A084265	001.00 EA	RESISTOR 100K OHM 1/4W 5% COMP	RCR07G104JS	
R037	A079984	001.00 EA	RESISTOR 4.02K OHM RN55C 1% MTL FLM	DP RN55C4021F	
R038	A078600	000.00 FT	NOT ASSIGNED	FOR ENG ONLY	
R039	A078600	000.00 FT	NOT ASSIGNED	FOR ENG ONLY	
R040	A078600	000.00 FT	NOT ASSIGNED	FOR ENG ONLY	
R041	A078600	000.00 FT	NOT ASSIGNED	FOR ENG ONLY	
R042	A078600	000.00 FT	NOT ASSIGNED	FOR ENG ONLY	
R043	A074735	001.00 EA	RESISTOR 22K OHM 1/4W 5% COMP	RCR07G223JS	
SP001	A176977	001.00 EA	ALARM .1-324KHZ 105DB 30VPP MAX	PKD33EP-01R	
S001	A083296	001.00 EA	SWITCH SPST 8 POS PC MT DIP	5-435166-3	00779
U001	A084000	000.00 EA	VARIES WITH MODEL,SEE HIGHER ASSY FOR PN	PER S A DWG	
U002	A084000	000.00 EA	VARIES WITH MODEL,SEE HIGHER ASSY FOR PN	PER S A DWG	
U003	A084000	000.00 EA	VARIES WITH MODEL,SEE HIGHER ASSY FOR PN	PER S A DWG	
U004	A084000	000.00 EA	VARIES WITH MODEL,SEE HIGHER ASSY FOR PN	PER S A DWG	
U005	A084000	000.00 EA	VARIES WITH MODEL,SEE HIGHER ASSY FOR PN	PER S A DWG	
U006	A084000	000.00 EA	VARIES WITH MODEL,SEE HIGHER ASSY FOR PN	PER S A DWG	
U007	A084000	000.00 EA	VARIES WITH MODEL,SEE HIGHER ASSY FOR PN	PER S A DWG	
U008	A084000	000.00 EA	VARIES WITH MODEL,SEE HIGHER ASSY FOR PN	PER S A DWG	
U009	A173221	001.00 EA	IC CMOS GATE NAND 2-IN QUAD	NSC MM74HC00N	
U010	A173221	001.00 EA	IC CMOS GATE NAND 2-IN QUAD	NSC MM74HC00N	
U011	A176988	001.00 EA	IC SCC CMOS 6MHZ HQL-DIP	VLSX VL85C30-10PC	
U012	A177170	001.00 EA	OSCILATR XTAL 7.9872 MHZ .005% .5 X .8 PC MT	RXDT-1-7.9872 MHZ	
U013	A173223	001.00 EA	IC CMOS INVERTER HEX 14L-DIP	MM74HC04N	
U014	A174000	000.00 EA	NOT USED ON THIS ASSEMBLY		
U015	A174000	000.00 EA	NOT USED ON THIS ASSEMBLY		
U016	A174000	000.00 EA	NOT USED ON THIS ASSEMBLY		
U017	A174000	000.00 EA	NOT USED ON THIS ASSEMBLY		
U018	A174000	000.00 EA	NOT USED ON THIS ASSEMBLY		
U019	A174000	000.00 EA	NOT USED ON THIS ASSEMBLY		
U020	A174000	000.00 EA	NOT USED ON THIS ASSEMBLY		
U021	A174227	001.00 EA	IC CMOS LATCH 8-BIT ADDRESSABLE	CD74HC259E	
U022	A172458	001.00 EA	IC CMOS FLIP-FLOP TYPE-D DUAL	MM74HC74N	
U023	A172455	001.00 EA	IC CMOS GATE AND 2-IN QUAD 14L-DIP	MM74HC08N	
U024	A078600	000.00 FT	NOT ASSIGNED	FOR ENG ONLY	
U026	A176985	001.00 EA	IC CMOS INVERTER HEX OPN DRAIN	TI SN74HC05N	
U027	A170303	001.00 EA	IC CLOCK CALENDAR FOR MICROS CMOS	MM58167BN	
U028	A176987	001.00 EA	IC CONT FOR MICROPROCESSOR PWR	MAX 691CPE	
U029	A076778	001.00 EA	IC TTL COUNTER DECADE 20-MHZ 2X5	SN74176N	
U030	A173644	001.00 EA	IC BUSS TRANSCVR IEEE 488 INTERFACE	TI TMS9914ANL	
U031	A330211	001.00 EA	IC CMOS BUFFER OCTAL	MM74HC244N	
U032	A330211	001.00 EA	IC CMOS BUFFER OCTAL	MM74HC244N	
U033	A177251	001.00 EA	IC CMOS LTCH 10B TRNSPRNT 3-ST	AMD AM29C841PC	
U034	A178541	001.00 EA	IC CMOS BUFFER/LINE DR 10-BIT	AMD #AM 29C 827APC	
U035	A174388	001.00 EA	IC CMOS COMPARATOR MAGNITUDE	MOS MC74HC85N	
U036	A084000	000.00 EA	VARIES WITH MODEL,SEE HIGHER ASSY FOR PN	PER S A DWG	
U037	A084000	000.00 EA	VARIES WITH MODEL,SEE HIGHER ASSY FOR PN	PER S A DWG	
U038	A177003	001.00 EA	IC CMOS TRANSCVR BUS 10-BIT	AM29C861APC	
U039	A084000	000.00 EA	VARIES WITH MODEL,SEE HIGHER ASSY FOR PN	PER S A DWG	
U040	A084000	000.00 EA	VARIES WITH MODEL,SEE HIGHER ASSY FOR PN	PER S A DWG	

A327887 SUB-ASSY PWB RTC DTA A327887

Revision H
Effective: July 01, 1990

REF	SA PART	Qty	Description	Mfr Part	CAGE
U041	A178541	001.00 EA	IC CMOS BUFFER/LINE DR 10-BIT	AMD #AM 29C 827APC	
U042	A178541	001.00 EA	IC CMOS BUFFER/LINE DR 10-BIT	AMD #AM 29C 827APC	
U043	A178541	001.00 EA	IC CMOS BUFFER/LINE DR 10-BIT	AMD #AM 29C 827APC	
U044	A177003	001.00 EA	IC CMOS TRANSCVR BUS 10-BIT	AM29C861APC	
U045	A177003	001.00 EA	IC CMOS TRANSCVR BUS 10-BIT	AM29C861APC	
U046	A084000	000.00 EA	VARIES WITH MODEL,SEE HIGHER ASSY FOR PN	PER S A DWG	
U047	A084000	000.00 EA	VARIES WITH MODEL,SEE HIGHER ASSY FOR PN	PER S A DWG	
U048	A174227	001.00 EA	IC CMOS LATCH 8-BIT ADDRESSABLE	CD74HC259E	
U049	A081658	001.00 EA	IC TTL BUFFER HEX OPEN-COL	SGN SN7407N	
U050	A172458	001.00 EA	IC CMOS FLIP-FLOP TYPE-D DUAL	MM74HC74N	
U051	A089838	001.00 EA	RESISTOR NETWORK 9 100K OHM 2% 10 SIP	BLI 4310R-101-104	
U052	A089838	001.00 EA	RESISTOR NETWORK 9 100K OHM 2% 10 SIP	BLI 4310R-101-104	
U053	A089838	001.00 EA	RESISTOR NETWORK 9 100K OHM 2% 10 SIP	BLI 4310R-101-104	
U054	A089838	001.00 EA	RESISTOR NETWORK 9 100K OHM 2% 10 SIP	BLI 4310R-101-104	
U055	A086899	001.00 EA	RESISTOR NETWORK 9 3.3K OHM 2% 10 SIP	4310R-101-332	
U056	A089838	001.00 EA	RESISTOR NETWORK 9 100K OHM 2% 10 SIP	BLI 4310R-101-104	
U057	A078600	000.00 FT	NOT ASSIGNED	FOR ENG ONLY	
U058	A172458	001.00 EA	IC CMOS FLIP-FLOP TYPE-D DUAL	MM74HC74N	
U059	A078600	000.00 FT	NOT ASSIGNED	FOR ENG ONLY	
U060	A078600	000.00 FT	NOT ASSIGNED	FOR ENG ONLY	
U061	A078600	000.00 FT	NOT ASSIGNED	FOR ENG ONLY	
XU001	A086652	001.00 EA	SOCKET 28 PIN DIP PC MT	RBN ICT-286-S-TG	
XU002	A086652	001.00 EA	SOCKET 28 PIN DIP PC MT	RBN ICT-286-S-TG	
XU003	A086652	001.00 EA	SOCKET 28 PIN DIP PC MT	RBN ICT-286-S-TG	
XU004	A086652	001.00 EA	SOCKET 28 PIN DIP PC MT	RBN ICT-286-S-TG	
XU005	A086652	001.00 EA	SOCKET 28 PIN DIP PC MT	RBN ICT-286-S-TG	
XU006	A086652	001.00 EA	SOCKET 28 PIN DIP PC MT	RBN ICT-286-S-TG	
XU007	A086652	001.00 EA	SOCKET 28 PIN DIP PC MT	RBN ICT-286-S-TG	
XU008	A086652	001.00 EA	SOCKET 28 PIN DIP PC MT	RBN ICT-286-S-TG	
XU011	A086653	001.00 EA	SOCKET 40 PIN DIP PC MT	RBN ICT-406-S-TG	
XU014	A078600	000.00 FT	NOT ASSIGNED	FOR ENG ONLY	
XU015	A078600	000.00 FT	NOT ASSIGNED	FOR ENG ONLY	
XU016	A078600	000.00 FT	NOT ASSIGNED	FOR ENG ONLY	
XU017	A078600	000.00 FT	NOT ASSIGNED	FOR ENG ONLY	
XU018	A078600	000.00 FT	NOT ASSIGNED	FOR ENG ONLY	
XU019	A078600	000.00 FT	NOT ASSIGNED	FOR ENG ONLY	
XU020	A078600	000.00 FT	NOT ASSIGNED	FOR ENG ONLY	
XU027	A086651	001.00 EA	SOCKET 24 PIN DIP PC MT	RBN ICT-246-S-TG	
XU030	A086653	001.00 EA	SOCKET 40 PIN DIP PC MT	RBN ICT-406-S-TG	
XU031	A086897	001.00 EA	SOCKET 20 PIN DIP PC MT	RBN ICT-203-S-TG	
XU032	A086897	001.00 EA	SOCKET 20 PIN DIP PC MT	RBN ICT-203-S-TG	
XU033	A173737	001.00 EA	SOCKET 24 PIN DIP PC MT LOW PROFILE OPEN UL94V	610-24-CC-D	
XU034	A173737	001.00 EA	SOCKET 24 PIN DIP PC MT LOW PROFILE OPEN UL94V	610-24-CC-D	
XU036	A173737	001.00 EA	SOCKET 24 PIN DIP PC MT LOW PROFILE OPEN UL94V	610-24-CC-D	
XU037	A173737	001.00 EA	SOCKET 24 PIN DIP PC MT LOW PROFILE OPEN UL94V	610-24-CC-D	
XU038	A173737	001.00 EA	SOCKET 24 PIN DIP PC MT LOW PROFILE OPEN UL94V	610-24-CC-D	
XU039	A173737	001.00 EA	SOCKET 24 PIN DIP PC MT LOW PROFILE OPEN UL94V	610-24-CC-D	
XU040	A173737	001.00 EA	SOCKET 24 PIN DIP PC MT LOW PROFILE OPEN UL94V	610-24-CC-D	
XU041	A173737	001.00 EA	SOCKET 24 PIN DIP PC MT LOW PROFILE OPEN UL94V	610-24-CC-D	
XU042	A173737	001.00 EA	SOCKET 24 PIN DIP PC MT LOW PROFILE OPEN UL94V	610-24-CC-D	
XU043	A173737	001.00 EA	SOCKET 24 PIN DIP PC MT LOW PROFILE OPEN UL94V	610-24-CC-D	
XU044	A173737	001.00 EA	SOCKET 24 PIN DIP PC MT LOW PROFILE OPEN UL94V	610-24-CC-D	
XU045	A173737	001.00 EA	SOCKET 24 PIN DIP PC MT LOW PROFILE OPEN UL94V	610-24-CC-D	
XU046	A086897	001.00 EA	SOCKET 20 PIN DIP PC MT	RBN ICT-203-S-TG	

A327887 SUB-ASSY PWB RTC DTA A327887

Revision H
Effective: July 01, 1990

REF	SA PART	Qty	Description	Mfr Part	CAGE
XU047	A173737	001.00 EA	SOCKET 24 PIN DIP PC MT LOW PROFILE OPEN UL94V	610-24-CC-D	
Y001	A170302	001.00 EA	CRYSTAL 32.768 KHZ .003% PARALLEL RES	CX-1V-32.768KHZ CAL	
001	A307261	001.00 EA	PWB RTC DTA	PER SA DWG. 307261 A	
002	A082463	002.00 EA	EXTRACTOR PC BOARD	THC 5005-08N	
005	A317056	001.00 EA	DUAL IN-LINE PAD	814-045	
006	A085749	000.10 RL	TAPE NEOP FOAM .5 THK .5 W ADHSV	GER BY DESC	

A327890 SUB-ASSY PWB DS1/DS3 XMTR DTA A327890

Revision B
Effective: July 01, 1990

REF	SA PART	Qty	Description	Mfr Part	CAGE
	A327888	000.00 EA	SCHEM DS1/DS3 XMTR DTA		
BB001	A177102	001.00 EA	BUS DISTRBTN 2-LYR VERT MT 36-PIN IN-LINE	RAZ QV-2 17.6.3 (.1)	
BB002	A177102	001.00 EA	BUS DISTRBTN 2-LYR VERT MT 36-PIN IN-LINE	RAZ QV-2 17.6.3 (.1)	
C001	A080139	001.00 EA	CAPACITR .1 MF 50V CER MONO -20%/+80%	RPE122Z5U104Z050V	
C002	A080139	001.00 EA	CAPACITR .1 MF 50V CER MONO -20%/+80%	RPE122Z5U104Z050V	
C003	A080139	001.00 EA	CAPACITR .1 MF 50V CER MONO -20%/+80%	RPE122Z5U104Z050V	
C004	A083649	001.00 EA	CAPACITR 7-25 PF MIN CER DISC PC MT	538-011-B-7-25	
C005	A081936	001.00 EA	CAPACITR 20 PF 100V CER DISC COG 5%	ER 835-024-COGO-200	
C006	A070501	001.00 EA	CAPACITR 47 PF 1 KV CER DISC S2L 10%	CEN DD470	
C007	A081936	001.00 EA	CAPACITR 20 PF 100V CER DISC COG 5%	ER 835-024-COGO-200	
C008	A081251	001.00 EA	CAPACITR 56 PF 1 KV CER DISC S3N 10%	DD560	
C009	A080139	001.00 EA	CAPACITR .1 MF 50V CER MONO -20%/+80%	RPE122Z5U104Z050V	
C010	A080139	001.00 EA	CAPACITR .1 MF 50V CER MONO -20%/+80%	RPE122Z5U104Z050V	
C011	A080139	001.00 EA	CAPACITR .1 MF 50V CER MONO -20%/+80%	RPE122Z5U104Z050V	
C012	A080139	001.00 EA	CAPACITR .1 MF 50V CER MONO -20%/+80%	RPE122Z5U104Z050V	
C013	A080139	001.00 EA	CAPACITR .1 MF 50V CER MONO -20%/+80%	RPE122Z5U104Z050V	
C014	A080139	001.00 EA	CAPACITR .1 MF 50V CER MONO -20%/+80%	RPE122Z5U104Z050V	
C015	A080139	001.00 EA	CAPACITR .1 MF 50V CER MONO -20%/+80%	RPE122Z5U104Z050V	
C016	A080139	001.00 EA	CAPACITR .1 MF 50V CER MONO -20%/+80%	RPE122Z5U104Z050V	
C017	A080139	001.00 EA	CAPACITR .1 MF 50V CER MONO -20%/+80%	RPE122Z5U104Z050V	
C018	A080139	001.00 EA	CAPACITR .1 MF 50V CER MONO -20%/+80%	RPE122Z5U104Z050V	
C019	A080139	001.00 EA	CAPACITR .1 MF 50V CER MONO -20%/+80%	RPE122Z5U104Z050V	
C020	A080139	001.00 EA	CAPACITR .1 MF 50V CER MONO -20%/+80%	RPE122Z5U104Z050V	
C021	A083649	001.00 EA	CAPACITR 7-25 PF MIN CER DISC PC MT	538-011-B-7-25	
C022	A080139	001.00 EA	CAPACITR .1 MF 50V CER MONO -20%/+80%	RPE122Z5U104Z050V	
C023	A078600	000.00 FT	NOT ASSIGNED	FOR ENG ONLY	
C024	A078600	000.00 FT	NOT ASSIGNED	FOR ENG ONLY	
C025	A078600	000.00 FT	NOT ASSIGNED	FOR ENG ONLY	
C026	A078600	000.00 FT	NOT ASSIGNED	FOR ENG ONLY	
C027	A081101	001.00 EA	CAPACITR 1 MF 50V CER MONO 20%	RPE113Z5U105M50V	
C028	A080139	001.00 EA	CAPACITR .1 MF 50V CER MONO -20%/+80%	RPE122Z5U104Z050V	
C029	A035656	001.00 EA	CAPACITR 100 MF 20V 10% SOLID TANT POL	T354M107K020AS	
C030	A080139	001.00 EA	CAPACITR .1 MF 50V CER MONO -20%/+80%	RPE122Z5U104Z050V	
C031	A080139	001.00 EA	CAPACITR .1 MF 50V CER MONO -20%/+80%	RPE122Z5U104Z050V	
C032	A035656	001.00 EA	CAPACITR 100 MF 20V 10% SOLID TANT POL	T354M107K020AS	
C033	A070474	001.00 EA	CAPACITR 10 PF 1 KV CER DISC S2L 10%	DD100	
C034	A070474	001.00 EA	CAPACITR 10 PF 1 KV CER DISC S2L 10%	DD100	
C035	A070490	001.00 EA	CAPACITR 30 PF 500V SILVER MICA 5%	DM15ED300J03	
C036	A077659	001.00 EA	CAPACITR 62 PF 500V SILVER MICA 5%	CD CD6ED620J03	
DS001	A177211	001.00 EA	LAMP LED-RSTR RED PC MT 5V 3MA	555-2007	
DS002	A177211	001.00 EA	LAMP LED-RSTR RED PC MT 5V 3MA	555-2007	
DS003	A177211	001.00 EA	LAMP LED-RSTR RED PC MT 5V 3MA	555-2007	
DS004	A177211	001.00 EA	LAMP LED-RSTR RED PC MT 5V 3MA	555-2007	
E001	A177971	001.00 EA	CHOKE WIDE-BAND 3B .236X394L	VK20009-3B	
E002	A177971	001.00 EA	CHOKE WIDE-BAND 3B .236X394L	VK20009-3B	
E003	A177971	001.00 EA	CHOKE WIDE-BAND 3B .236X394L	VK20009-3B	
J001	A173712	001.00 EA	CONN RECT 96-COND MALE PNL MT RT ANG PC MT	532505-1	00779
J002	A173712	001.00 EA	CONN RECT 96-COND MALE PNL MT RT ANG PC MT	532505-1	00779
J003	A078600	000.00 FT	NOT ASSIGNED	FOR ENG ONLY	
J004	A078600	000.00 FT	NOT ASSIGNED	FOR ENG ONLY	
J005	A078600	000.00 FT	NOT ASSIGNED	FOR ENG ONLY	
J006	A078600	000.00 FT	NOT ASSIGNED	FOR ENG ONLY	
J007	A078600	000.00 FT	NOT ASSIGNED	FOR ENG ONLY	
J008	A078600	000.00 FT	NOT ASSIGNED	FOR ENG ONLY	
J009	A078600	000.00 FT	NOT ASSIGNED	FOR ENG ONLY	

A327890 SUB-ASSY PWB DS1/DS3 XMTR DTA A327890

Revision B
Effective: July 01, 1990

REF	SA PART	Qty	Description	Mfr Part	CAGE
J010	A078600	000.00 FT	NOT ASSIGNED	FOR ENG ONLY	
J011	A084000	000.00 EA	VARIES WITH MODEL,SEE HIGHER ASSY FOR PN	PER S A DWG	
J012	A084000	000.00 EA	VARIES WITH MODEL,SEE HIGHER ASSY FOR PN	PER S A DWG	
J013	A084000	000.00 EA	VARIES WITH MODEL,SEE HIGHER ASSY FOR PN	PER S A DWG	
J014	A084000	000.00 EA	VARIES WITH MODEL,SEE HIGHER ASSY FOR PN	PER S A DWG	
J015	A078600	000.00 FT	NOT ASSIGNED	FOR ENG ONLY	
J016	A078600	000.00 FT	NOT ASSIGNED	FOR ENG ONLY	
J017	A174000	000.00 EA	NOT USED ON THIS ASSEMBLY		
J018	A078600	000.00 FT	NOT ASSIGNED	FOR ENG ONLY	
L001	A080804	001.00 EA	INDUCTOR 1.0 UH MIN SHLD MOLDED 10%	15S-1R0K	
L002	A080805	001.00 EA	INDUCTOR 2.2 UH MIN SHLD 10%	AIS 15S-02R2K	
L003	A077971	001.00 EA	INDUCTOR 1.5 UH SUBMIN UNSHLD 10%	DP IR 2	
L004	A080805	001.00 EA	INDUCTOR 2.2 UH MIN SHLD 10%	AIS 15S-02R2K	
L005	A176207	001.00 EA	IND 120UH Q-62 SHLD 5% .164DIA	NYT WEE 120	
L006	A176207	001.00 EA	IND 120UH Q-62 SHLD 5% .164DIA	NYT WEE 120	
L007	A176225	001.00 EA	IDCTR 100UH Q-63 SHLD 5% .164D	AM-184	
L008	A080805	001.00 EA	INDUCTOR 2.2 UH MIN SHLD 10%	AIS 15S-02R2K	
Q001	A174224	001.00 EA	TRANSSTR MRF-571 NPN SIL	MRF-571	
Q002	A077148	001.00 EA	TRANSSTR 2N3251 PNP SIL	2N3251	
Q003	A075091	001.00 EA	TRANSSTR 2N2857 NPN SIL	2N2857	
Q004	A075091	001.00 EA	TRANSSTR 2N2857 NPN SIL	2N2857	
Q005	A075091	001.00 EA	TRANSSTR 2N2857 NPN SIL	2N2857	
Q006	A174224	001.00 EA	TRANSSTR MRF-571 NPN SIL	MRF-571	
Q007	A174224	001.00 EA	TRANSSTR MRF-571 NPN SIL	MRF-571	
Q008	A077148	001.00 EA	TRANSSTR 2N3251 PNP SIL	2N3251	
Q009	A174224	001.00 EA	TRANSSTR MRF-571 NPN SIL	MRF-571	
Q010	A174224	001.00 EA	TRANSSTR MRF-571 NPN SIL	MRF-571	
Q011	A174224	001.00 EA	TRANSSTR MRF-571 NPN SIL	MRF-571	
Q012	A077148	001.00 EA	TRANSSTR 2N3251 PNP SIL	2N3251	
Q013	A077147	001.00 EA	TRANSSTR 2N3947 NPN SIL	MOT 2N3947	
Q014	A077147	001.00 EA	TRANSSTR 2N3947 NPN SIL	MOT 2N3947	
Q015	A083032	001.00 EA	TRANSSTR 2N2222A NPN SIL	FSC 2N2222A	
Q016	A083032	001.00 EA	TRANSSTR 2N2222A NPN SIL	FSC 2N2222A	
R001	A074722	001.00 EA	RESISTOR 4.7K OHM 1/4W 5% COMP	RCR07G472JS	
R002	A074710	001.00 EA	RESISTOR 2.2K OHM 1/4W 5% COMP	RCR07G222JS	
R003	A074722	001.00 EA	RESISTOR 4.7K OHM 1/4W 5% COMP	RCR07G472JS	
R004	A074722	001.00 EA	RESISTOR 4.7K OHM 1/4W 5% COMP	RCR07G472JS	
R005	A074722	001.00 EA	RESISTOR 4.7K OHM 1/4W 5% COMP	RCR07G472JS	
R006	A074722	001.00 EA	RESISTOR 4.7K OHM 1/4W 5% COMP	RCR07G472JS	
R007	A074722	001.00 EA	RESISTOR 4.7K OHM 1/4W 5% COMP	RCR07G472JS	
R008	A074722	001.00 EA	RESISTOR 4.7K OHM 1/4W 5% COMP	RCR07G472JS	
R009	A074722	001.00 EA	RESISTOR 4.7K OHM 1/4W 5% COMP	RCR07G472JS	
R010	A074722	001.00 EA	RESISTOR 4.7K OHM 1/4W 5% COMP	RCR07G472JS	
R011	A074722	001.00 EA	RESISTOR 4.7K OHM 1/4W 5% COMP	RCR07G472JS	
R012	A079126	001.00 EA	RESISTOR 604 OHM RN55C 1% MTL FLM	D RN55C6040F	
R013	A079863	001.00 EA	RESISTOR 1.21K OHM RN55C 1% MTL FLM	DP RN55C1211F	
R014	A079863	001.00 EA	RESISTOR 1.21K OHM RN55C 1% MTL FLM	DP RN55C1211F	
R015	A074710	001.00 EA	RESISTOR 2.2K OHM 1/4W 5% COMP	RCR07G222JS	
R016	A075551	001.00 EA	RESISTOR 10 OHM 1/4W 5% COMP	RCR07G100JS	
R017	A083089	001.00 EA	RESISTOR 75.0 OHM RN55C 1% MTL FLM	XZ RN55C75R0F T&R	
R018	A083089	001.00 EA	RESISTOR 75.0 OHM RN55C 1% MTL FLM	XZ RN55C75R0F T&R	
R019	A074722	001.00 EA	RESISTOR 4.7K OHM 1/4W 5% COMP	RCR07G472JS	
R020	A074706	001.00 EA	RESISTOR 1.5K OHM 1/4W 5% COMP	RCR07G152JS	
R021	A074679	001.00 EA	RESISTOR 150 OHM 1/4W 5% COMP	RCR07G151JS	

A327890 SUB-ASSY PWB DS1/DS3 XMTR DTA A327890

Revision B
Effective: July 01, 1990

REF	SA PART	Qty	Description	Mfr Part	CAGE
R022	A075551	001.00 EA	RESISTOR 10 OHM 1/4W 5% COMP	RCR07G100JS	
R023	A074706	001.00 EA	RESISTOR 1.5K OHM 1/4W 5% COMP	RCR07G152JS	
R024	A174217	001.00 EA	RESISTOR 137 OHM RN55C 1% MTL	XZ RN55C1370F	
R025	A074706	001.00 EA	RESISTOR 1.5K OHM 1/4W 5% COMP	RCR07G152JS	
R026	A083860	001.00 EA	RESISTOR 154 OHM RN55C 1% MTL FLM	XZ RN55C 1540F	
R027	A074722	001.00 EA	RESISTOR 4.7K OHM 1/4W 5% COMP	RCR07G472JS	
R028	A074718	001.00 EA	RESISTOR 3.9K OHM 1/4W 5% COMP	RCR07G392JS	
R029	A083089	001.00 EA	RESISTOR 75.0 OHM RN55C 1% MTL FLM	XZ RN55C75R0F T&R	
R030	A074718	001.00 EA	RESISTOR 3.9K OHM 1/4W 5% COMP	RCR07G392JS	
R031	A083840	001.00 EA	RESISTOR 30.1 OHM RN55D 1% MTL FLM	XZ RN55D 30R1F	
R032	A074718	001.00 EA	RESISTOR 3.9K OHM 1/4W 5% COMP	RCR07G392JS	
R033	A083851	001.00 EA	RESISTOR 59.0 OHM RN55C 1% MTL FLM	XZ RN55C 59R0F	
R034	A074696	001.00 EA	RESISTOR 470 OHM 1/4W 5% COMP	CR07G471JS	
R035	A074718	001.00 EA	RESISTOR 3.9K OHM 1/4W 5% COMP	RCR07G392JS	
R036	A083089	001.00 EA	RESISTOR 75.0 OHM RN55C 1% MTL FLM	XZ RN55C75R0F T&R	
R037	A083827	001.00 EA	RESISTOR 16.2 OHM RN55D 1% MTL FLM	DP RN55D16R2F	
R038	A085745	001.00 EA	RESISTOR 68.1 OHM RN55C 1% MTL FLM	RN55C68R1F	
R039	A083863	001.00 EA	RESISTOR 187 OHM RN55C 1% MTL FLM	XZ RN55C 1870F	
R040	A077524	001.00 EA	RESISTOR 75 OHM 1/4W 5% COMP	RCR07G750JS	
R041	A075551	001.00 EA	RESISTOR 10 OHM 1/4W 5% COMP	RCR07G100JS	
R042	A083819	001.00 EA	RESISTOR 11.0 OHM RN55D 1% MTL FLM	MEPCO SFR55D 11 OHM	
R043	A083800	001.00 EA	RESISTOR 115 OHM RN55C 1% MTL FLM	XZ RN55C1150F	
R044	A083838	001.00 EA	RESISTOR 27.4 OHM RN55D 1% MTL FLM	RN55D27R4F	
R045	A083800	001.00 EA	RESISTOR 115 OHM RN55C 1% MTL FLM	XZ RN55C1150F	
R046	A083838	001.00 EA	RESISTOR 27.4 OHM RN55D 1% MTL FLM	RN55D27R4F	
R047	A083089	001.00 EA	RESISTOR 75.0 OHM RN55C 1% MTL FLM	XZ RN55C75R0F T&R	
R048	A083800	001.00 EA	RESISTOR 115 OHM RN55C 1% MTL FLM	XZ RN55C1150F	
R049	A083838	001.00 EA	RESISTOR 27.4 OHM RN55D 1% MTL FLM	RN55D27R4F	
R050	A075551	001.00 EA	RESISTOR 10 OHM 1/4W 5% COMP	RCR07G100JS	
R051	A085745	001.00 EA	RESISTOR 68.1 OHM RN55C 1% MTL FLM	RN55C68R1F	
R052	A083819	001.00 EA	RESISTOR 11.0 OHM RN55D 1% MTL FLM	MEPCO SFR55D 11 OHM	
R053	A075551	001.00 EA	RESISTOR 10 OHM 1/4W 5% COMP	RCR07G100JS	
R054	A085745	001.00 EA	RESISTOR 68.1 OHM RN55C 1% MTL FLM	RN55C68R1F	
R055	A083819	001.00 EA	RESISTOR 11.0 OHM RN55D 1% MTL FLM	MEPCO SFR55D 11 OHM	
R056	A075551	001.00 EA	RESISTOR 10 OHM 1/4W 5% COMP	RCR07G100JS	
R057	A085745	001.00 EA	RESISTOR 68.1 OHM RN55C 1% MTL FLM	RN55C68R1F	
R058	A083819	001.00 EA	RESISTOR 11.0 OHM RN55D 1% MTL FLM	MEPCO SFR55D 11 OHM	
R059	A074706	001.00 EA	RESISTOR 1.5K OHM 1/4W 5% COMP	RCR07G152JS	
R060	A074722	001.00 EA	RESISTOR 4.7K OHM 1/4W 5% COMP	RCR07G472JS	
R061	A074722	001.00 EA	RESISTOR 4.7K OHM 1/4W 5% COMP	RCR07G472JS	
R062	A074722	001.00 EA	RESISTOR 4.7K OHM 1/4W 5% COMP	RCR07G472JS	
R063	A074722	001.00 EA	RESISTOR 4.7K OHM 1/4W 5% COMP	RCR07G472JS	
R064	A074710	001.00 EA	RESISTOR 2.2K OHM 1/4W 5% COMP	RCR07G222JS	
R065	A078929	001.00 EA	RESISTOR 1.00K OHM RN55C 1% MTL FLM	XZ RN55C1001F	
R066	A175693	001.00 EA	RESISTOR 1.13K OHM RN55C 1%	XZ RN55C1131F	
R067	A078929	001.00 EA	RESISTOR 1.00K OHM RN55C 1% MTL FLM	XZ RN55C1001F	
R068	A175693	001.00 EA	RESISTOR 1.13K OHM RN55C 1%	XZ RN55C1131F	
R069	A079114	001.00 EA	RESISTOR 10.0 OHM RN55D 1% MTL FLM	DP RN55D10R0F	
R070	A079126	001.00 EA	RESISTOR 604 OHM RN55C 1% MTL FLM	D RN55C6040F	
R071	A079126	001.00 EA	RESISTOR 604 OHM RN55C 1% MTL FLM	D RN55C6040F	
R072	A080379	001.00 EA	RESISTOR 1.37K OHM RN55C 1% MTL FLM	DP RN55C1371F	
R073	A079114	001.00 EA	RESISTOR 10.0 OHM RN55D 1% MTL FLM	DP RN55D10R0F	
R074	A079126	001.00 EA	RESISTOR 604 OHM RN55C 1% MTL FLM	D RN55C6040F	
R075	A079126	001.00 EA	RESISTOR 604 OHM RN55C 1% MTL FLM	D RN55C6040F	

A327890 SUB-ASSY PWB DS1/DS3 XMTR DTA A327890

Revision B
Effective: July 01, 1990

REF	SA PART	Qty	Description	Mfr Part	CAGE
R076	A080379	001.00 EA	RESISTOR 1.37K OHM RN55C 1% MTL FLM	DP RN55C1371F	
R077	A083881	001.00 EA	RESISTOR 866 OHM RN55C 1% MTL FLM	DP RN55C8660F	
R078	A083800	001.00 EA	RESISTOR 115 OHM RN55C 1% MTL FLM	XZ RN55C1150F	
R079	A074722	001.00 EA	RESISTOR 4.7K OHM 1/4W 5% COMP	RCR07G472JS	
R080	A074722	001.00 EA	RESISTOR 4.7K OHM 1/4W 5% COMP	RCR07G472JS	
R081	A074722	001.00 EA	RESISTOR 4.7K OHM 1/4W 5% COMP	RCR07G472JS	
R082	A074722	001.00 EA	RESISTOR 4.7K OHM 1/4W 5% COMP	RCR07G472JS	
R083	A074722	001.00 EA	RESISTOR 4.7K OHM 1/4W 5% COMP	RCR07G472JS	
R084	A074722	001.00 EA	RESISTOR 4.7K OHM 1/4W 5% COMP	RCR07G472JS	
R085	A074727	001.00 EA	RESISTOR 10K OHM 1/4W 5% COMP	RCR07G103JS	
R086	A074722	001.00 EA	RESISTOR 4.7K OHM 1/4W 5% COMP	RCR07G472JS	
R087	A074722	001.00 EA	RESISTOR 4.7K OHM 1/4W 5% COMP	RCR07G472JS	
R088	A074675	001.00 EA	RESISTOR 100 OHM 1/4W 5% COMP	CR07G101JS	
R089	A075597	001.00 EA	RESISTOR 82 OHM 1/4W 5% COMP	RCR07G820JS	
R090	A077592	001.00 EA	RESISTOR 120 OHM 1/4W 5% COMP	RCR07G121JS	
R091	A075597	001.00 EA	RESISTOR 82 OHM 1/4W 5% COMP	RCR07G820JS	
R092	A077592	001.00 EA	RESISTOR 120 OHM 1/4W 5% COMP	RCR07G121JS	
R093	A083089	001.00 EA	RESISTOR 75.0 OHM RN55C 1% MTL FLM	XZ RN55C75R0F T&R	
R094	A083089	001.00 EA	RESISTOR 75.0 OHM RN55C 1% MTL FLM	XZ RN55C75R0F T&R	
R095	A078110	001.00 EA	RESISTOR 180 OHM 1/4W 5% COMP	RCR07G181JS	
R096	A075692	001.00 EA	RESISTOR 82K OHM 1/4W 5% COMP	RCR07G823JS	
R097	A087841	001.00 EA	POT 20K OHM 1/2W CER 3/8 SQ VERT ADJ 25T	3299W-1-203	
R098	A074727	001.00 EA	RESISTOR 10K OHM 1/4W 5% COMP	RCR07G103JS	
R099	A071856	001.00 EA	RESISTOR 33 OHM 1/4W 5% COMP	RCR-07G330-JS	
R100	A071856	001.00 EA	RESISTOR 33 OHM 1/4W 5% COMP	RCR-07G330-JS	
R101	A071856	001.00 EA	RESISTOR 33 OHM 1/4W 5% COMP	RCR-07G330-JS	
R102	A071856	001.00 EA	RESISTOR 33 OHM 1/4W 5% COMP	RCR-07G330-JS	
R103	A071856	001.00 EA	RESISTOR 33 OHM 1/4W 5% COMP	RCR-07G330-JS	
R104	A071856	001.00 EA	RESISTOR 33 OHM 1/4W 5% COMP	RCR-07G330-JS	
TP001	A082909	001.00 EA	TERMINAL PRESS MT DISCONNECT .058 PIN	60599-1	00779
TP002	A082909	001.00 EA	TERMINAL PRESS MT DISCONNECT .058 PIN	60599-1	00779
TP003	A082909	001.00 EA	TERMINAL PRESS MT DISCONNECT .058 PIN	60599-1	00779
T001	A177027	001.00 EA	XFMR 1;1.37CT PRI L 680UH	2745C	
U001	A327878	001.00 EA	IC PATTERN GENERATOR	LSI ASIC #LIA3381-MC	
U002	A327877	001.00 EA	IC FRAMER	LSI ASIC #LIA 3324-M	
U003	A327876	001.00 EA	IC CLOCK REC DIGITAL	LSI LIA3382-MC	
U004	A304112	001.00 EA	OSCILLATOR CLOCK 44736 MGH	PER SA DESC	
U005	A089252	001.00 EA	RESISTOR NETWORK 9 4.7K OHM 2% 10 SIP	BLI 4310R-101-472	
U006	A327878	001.00 EA	IC PATTERN GENERATOR	LSI ASIC #LIA3381-MC	
U007	A327877	001.00 EA	IC FRAMER	LSI ASIC #LIA 3324-M	
U008	A327876	001.00 EA	IC CLOCK REC DIGITAL	LSI LIA3382-MC	
U009	A172455	001.00 EA	IC CMOS GATE AND 2-IN QUAD 14L-DIP	MM74HC08N	
U010	A172465	001.00 EA	IC CMOS COUNTER 4-BIT BINARY	MOT MC74HC393N	
U011	A252731	001.00 EA	OSCLTR CLOCK 6.176MHZ MDL 9500	03-02003-001	
U012	A174227	001.00 EA	IC CMOS LATCH 8-BIT ADDRESSABLE	CD74HC259E	
U013	A084000	000.00 EA	VARIES WITH MODEL,SEE HIGHER ASSY FOR PN	PER S A DWG	
U014	A084000	000.00 EA	VARIES WITH MODEL,SEE HIGHER ASSY FOR PN	PER S A DWG	
U015	A081658	001.00 EA	IC TTL BUFFER HEX OPEN-COL	SGN SN7407N	
U016	A174111	001.00 EA	IC CMOS LATCH 8-BIT 3-STATE	RCA CD74HC373E	
U017	A177003	001.00 EA	IC CMOS TRANSCVR BUS 10-BIT	AM29C861APC	
U018	A177003	001.00 EA	IC CMOS TRANSCVR BUS 10-BIT	AM29C861APC	
U019	A177002	001.00 EA	IC CMOS BUFFER 10-BIT NONINVRT	AMD AM29C827PC	
U020	A084000	000.00 EA	VARIES WITH MODEL,SEE HIGHER ASSY FOR PN	PER S A DWG	
U021	A177002	001.00 EA	IC CMOS BUFFER 10-BIT NONINVRT	AMD AM29C827PC	

A327890 SUB-ASSY PWB DS1/DS3 XMTR DTA A327890

Revision B
Effective: July 01, 1990

REF	SA PART	Qty	Description	Mfr Part	CAGE
U022	A084000	000.00 EA	VARIES WITH MODEL,SEE HIGHER ASSY FOR PN	PER S A DWG	
U023	A088405	001.00 EA	IC ECL TRANSLATOR ECL/TTL QUAD	MOS MC10125L	
XU001	A177011	001.00 EA	SOCKET 68 POS PLCC PC MT	PLCC-68-P-T	
XU002	A177011	001.00 EA	SOCKET 68 POS PLCC PC MT	PLCC-68-P-T	
XU003	A177011	001.00 EA	SOCKET 68 POS PLCC PC MT	PLCC-68-P-T	
XU006	A177011	001.00 EA	SOCKET 68 POS PLCC PC MT	PLCC-68-P-T	
XU007	A177011	001.00 EA	SOCKET 68 POS PLCC PC MT	PLCC-68-P-T	
XU008	A177011	001.00 EA	SOCKET 68 POS PLCC PC MT	PLCC-68-P-T	
XU013	A173737	001.00 EA	SOCKET 24 PIN DIP PC MT LOW PROFILE OPEN UL94V	610-24-CC-D	
XU014	A177349	001.00 EA	SOCKET 32-PIN DIP .6W PC MT	ICT-326-S-TG	
XU016	A086897	001.00 EA	SOCKET 20 PIN DIP PC MT	RBN ICT-203-S-TG	
XU017	A173737	001.00 EA	SOCKET 24 PIN DIP PC MT LOW PROFILE OPEN UL94V	610-24-CC-D	
XU018	A173737	001.00 EA	SOCKET 24 PIN DIP PC MT LOW PROFILE OPEN UL94V	610-24-CC-D	
XU019	A173737	001.00 EA	SOCKET 24 PIN DIP PC MT LOW PROFILE OPEN UL94V	610-24-CC-D	
XU020	A173737	001.00 EA	SOCKET 24 PIN DIP PC MT LOW PROFILE OPEN UL94V	610-24-CC-D	
XU021	A173737	001.00 EA	SOCKET 24 PIN DIP PC MT LOW PROFILE OPEN UL94V	610-24-CC-D	
XU022	A173737	001.00 EA	SOCKET 24 PIN DIP PC MT LOW PROFILE OPEN UL94V	610-24-CC-D	
Z001	A327940	001.00 EA	HYBRID 75 OHM DSX - 3	PER SA DWG.	
Z002	A327942	001.00 EA	HYBRID 75 OHM TRIPPLE BUF	PER SA DWG	
Z003	A327944	001.00 EA	HYBRID 100 OHM DS1 OUTPUT	PER SA DWG.	
001	A327889	001.00 EA	PWB DS1/DS3 XMTR DTA	PER SA DWG. 327889 B	
002	A317056	002.00 EA	DUAL IN-LINE PAD	814-045	

A327968 ASSY PWB RTC DTA A327968

Revision F
Effective: July 01, 1990

REF	SA PART	Qty	Description	Mfr Part	CAGE
U001	A176856	001.00 EA	IC MEMORY CMOS RAM 32768 X 8 120NS ST	K58257AP-12L	
U002	A176856	001.00 EA	IC MEMORY CMOS RAM 32768 X 8 120NS ST	K58257AP-12L	
U003	A176856	001.00 EA	IC MEMORY CMOS RAM 32768 X 8 120NS ST	K58257AP-12L	
U004	A176856	001.00 EA	IC MEMORY CMOS RAM 32768 X 8 120NS ST	K58257AP-12L	
U036	A328041	001.00 EA	ASSY PAL PROGRAM U36 RTC DTA		
U037	A457021	001.00 EA	ASSY PAL PROGRAM U37 RTC	PER SA DWG 457021	10110
U039	A309118	001.00 EA	ASSY PAL PROGRAM U39 RTC	PER SA DWG 309118	10110
U040	A309669	001.00 EA	ASSY PAL PROGRAM U40 RTC	PER SA DWG 309669	10110
U046	A309115	001.00 EA	ASSY PAL PROGRAM U46 RTC		
U047	A459040	001.00 EA	ASSY PAL PROGRAM U47 RTC	PER SA DWG 459040	10110
001	A458359B/T	001.00 EA	SUB-ASSY PWB RTC DTA		
001	A458359	001.00 EA	SUB-ASSY PWB RTC DTA		
002	A307220	001.00 EA	LABEL RTC PWB ASSEMBLY		

A328076 ASSY PWB XMTR DAS A328076

Revision C
Effective: January 30, 1991

REF	SA PART	Qty	Description	Mfr Part	CAGE
	A309714	000.00 EA	TRANSMIT BOARD TEST PROCEDURE	PER SA DWG 309714	42061
J011	A176125	001.00 EA	CONN COAX BNC FEM RT ANG PC MT	UCBJR20	
J012	A176125	001.00 EA	CONN COAX BNC FEM RT ANG PC MT	UCBJR20	
J013	A176125	001.00 EA	CONN COAX BNC FEM RT ANG PC MT	UCBJR20	
J017	A307232	001.00 EA	JACK PHONE 3-COND T-R AU RTANG	PER SA DWG.	
U013	A328017	001.00 EA	ASSY PAL PROGRAM U13 XMTR DTA		
U020	A328019	001.00 EA	ASSY PAL PROGRAM U20 XMTR DTA		
U022	A328021	001.00 EA	AASSY PAL PROGRAM U22 XMTR DTA		
001	A309237	001.00 EA	SUB-ASSY PWB XMTR MDL AT9500		
002	A457022	001.00 EA	EPROM & LABEL SET XMTR DTA/DAS		
003	A328090	001.00 EA	BRAKCET XMTR PCB LEGEND	PER SA DWG.	
004	A328070	001.00 EA	LABEL TRANSMITTER PCB	SLB PER #328070	
005	A177365	002.00 EA	SPACER NO.4 ID 1/4 OD 3/32L NI	UNICORP S-503-M01-F0	
006	A071494	002.00 EA	NUT 4-40 UNC-2B,PLAIN-HEX,SST	PER MS35649-244	
007	A072321	002.00 EA	SCREW 4-40 X 3/8 F HD,82 DEG,SST	ATY 72321	
008	A073266	002.00 EA	WASHER-NO. 4- .125 .250 .022 AUS SST	PER ANSI B.18.22.1	
009	A073265	002.00 EA	WASHER NO. 4 LOCK EXT TOOTH CAD PLT STL	PER MS35335-29	96906
010	A082463	001.00 EA	EXTRACTOR PC BOARD	THC 5005-08N	

A328086 ASSY PWB MOTHEROARD DAS A328086

Revision A
Effective: July 01, 1990

REF	SA PART	Qty	Description	Mfr Part	CAGE
	A328084	000.00 EA	SCHEMATIC MOTHERBOARD DAS		
BB001	A306191	001.00 EA	BUS PWR 3 LAYER 10A 16.9.2.4	ROGERS 1SCIMB01Z	
BB002	A306191	001.00 EA	BUS PWR 3 LAYER 10A 16.9.2.4	ROGERS 1SCIMB01Z	
BB003	A306191	001.00 EA	BUS PWR 3 LAYER 10A 16.9.2.4	ROGERS 1SCIMB01Z	
BB004	A306191	001.00 EA	BUS PWR 3 LAYER 10A 16.9.2.4	ROGERS 1SCIMB01Z	
CR001	A071122	001.00 EA	DIODE 1N914 SIL 75V 75MA	1N914	
CR002	A071122	001.00 EA	DIODE 1N914 SIL 75V 75MA	1N914	
CR003	A071122	001.00 EA	DIODE 1N914 SIL 75V 75MA	1N914	
C001	A080139	001.00 EA	CAPACITR .1 MF 50V CER MONO -20%/+80%	RPE122Z5U104Z050V	
C002	A035654	001.00 EA	CAPACITR 10 MF 25V 10% SOLID TANT	T354E106K025AS	
C003	A035654	001.00 EA	CAPACITR 10 MF 25V 10% SOLID TANT	T354E106K025AS	
C004	A080139	001.00 EA	CAPACITR .1 MF 50V CER MONO -20%/+80%	RPE122Z5U104Z050V	
C005	A080139	001.00 EA	CAPACITR .1 MF 50V CER MONO -20%/+80%	RPE122Z5U104Z050V	
C006	A035654	001.00 EA	CAPACITR 10 MF 25V 10% SOLID TANT	T354E106K025AS	
C007	A035654	001.00 EA	CAPACITR 10 MF 25V 10% SOLID TANT	T354E106K025AS	
C008	A080139	001.00 EA	CAPACITR .1 MF 50V CER MONO -20%/+80%	RPE122Z5U104Z050V	
C009	A080139	001.00 EA	CAPACITR .1 MF 50V CER MONO -20%/+80%	RPE122Z5U104Z050V	
C010	A035654	001.00 EA	CAPACITR 10 MF 25V 10% SOLID TANT	T354E106K025AS	
C011	A035654	001.00 EA	CAPACITR 10 MF 25V 10% SOLID TANT	T354E106K025AS	
C012	A080139	001.00 EA	CAPACITR .1 MF 50V CER MONO -20%/+80%	RPE122Z5U104Z050V	
C013	A035654	001.00 EA	CAPACITR 10 MF 25V 10% SOLID TANT	T354E106K025AS	
C014	A080139	001.00 EA	CAPACITR .1 MF 50V CER MONO -20%/+80%	RPE122Z5U104Z050V	
C015	A035654	001.00 EA	CAPACITR 10 MF 25V 10% SOLID TANT	T354E106K025AS	
C016	A080139	001.00 EA	CAPACITR .1 MF 50V CER MONO -20%/+80%	RPE122Z5U104Z050V	
C017	A035654	001.00 EA	CAPACITR 10 MF 25V 10% SOLID TANT	T354E106K025AS	
C018	A080139	001.00 EA	CAPACITR .1 MF 50V CER MONO -20%/+80%	RPE122Z5U104Z050V	
C019	A080139	001.00 EA	CAPACITR .1 MF 50V CER MONO -20%/+80%	RPE122Z5U104Z050V	
C020	A035654	001.00 EA	CAPACITR 10 MF 25V 10% SOLID TANT	T354E106K025AS	
C021	A035654	001.00 EA	CAPACITR 10 MF 25V 10% SOLID TANT	T354E106K025AS	
C022	A080139	001.00 EA	CAPACITR .1 MF 50V CER MONO -20%/+80%	RPE122Z5U104Z050V	
C023	A080139	001.00 EA	CAPACITR .1 MF 50V CER MONO -20%/+80%	RPE122Z5U104Z050V	
C024	A035654	001.00 EA	CAPACITR 10 MF 25V 10% SOLID TANT	T354E106K025AS	
C025	A035654	001.00 EA	CAPACITR 10 MF 25V 10% SOLID TANT	T354E106K025AS	
C026	A080139	001.00 EA	CAPACITR .1 MF 50V CER MONO -20%/+80%	RPE122Z5U104Z050V	
C027	A080139	001.00 EA	CAPACITR .1 MF 50V CER MONO -20%/+80%	RPE122Z5U104Z050V	
C028	A035654	001.00 EA	CAPACITR 10 MF 25V 10% SOLID TANT	T354E106K025AS	
C029	A035654	001.00 EA	CAPACITR 10 MF 25V 10% SOLID TANT	T354E106K025AS	
C030	A080139	001.00 EA	CAPACITR .1 MF 50V CER MONO -20%/+80%	RPE122Z5U104Z050V	
C031	A080139	001.00 EA	CAPACITR .1 MF 50V CER MONO -20%/+80%	RPE122Z5U104Z050V	
C032	A035654	001.00 EA	CAPACITR 10 MF 25V 10% SOLID TANT	T354E106K025AS	
C033	A035654	001.00 EA	CAPACITR 10 MF 25V 10% SOLID TANT	T354E106K025AS	
C034	A080139	001.00 EA	CAPACITR .1 MF 50V CER MONO -20%/+80%	RPE122Z5U104Z050V	
C035	A035654	001.00 EA	CAPACITR 10 MF 25V 10% SOLID TANT	T354E106K025AS	
C036	A080139	001.00 EA	CAPACITR .1 MF 50V CER MONO -20%/+80%	RPE122Z5U104Z050V	
C037	A080139	001.00 EA	CAPACITR .1 MF 50V CER MONO -20%/+80%	RPE122Z5U104Z050V	
C038	A080139	001.00 EA	CAPACITR .1 MF 50V CER MONO -20%/+80%	RPE122Z5U104Z050V	
C039	A080139	001.00 EA	CAPACITR .1 MF 50V CER MONO -20%/+80%	RPE122Z5U104Z050V	
C040	A086013	001.00 EA	CAPACITR 22 MF 25V SOLID TANT	T354H226K025AS	
C041	A086013	001.00 EA	CAPACITR 22 MF 25V SOLID TANT	T354H226K025AS	
C042	A081109	001.00 EA	CAPACITR 47 MF 20V 10% SOLID TANT POL	T354K476K020AS	
C043	A086013	001.00 EA	CAPACITR 22 MF 25V SOLID TANT	T354H226K025AS	
C044	A086013	001.00 EA	CAPACITR 22 MF 25V SOLID TANT	T354H226K025AS	
C045	A081109	001.00 EA	CAPACITR 47 MF 20V 10% SOLID TANT POL	T354K476K020AS	
C046	A086013	001.00 EA	CAPACITR 22 MF 25V SOLID TANT	T354H226K025AS	
C047	A086013	001.00 EA	CAPACITR 22 MF 25V SOLID TANT	T354H226K025AS	

A328086 ASSY PWB MOTHEROARD DAS A328086

Revision A
Effective: July 01, 1990

REF	SA PART	Qty	Description	Mfr Part	CAGE
C048	A081109	001.00 EA	CAPACITR 47 MF 20V 10% SOLID TANT POL	T354K476K020AS	
C049	A086013	001.00 EA	CAPACITR 22 MF 25V SOLID TANT	T354H226K025AS	
C050	A086013	001.00 EA	CAPACITR 22 MF 25V SOLID TANT	T354H226K025AS	
C051	A081109	001.00 EA	CAPACITR 47 MF 20V 10% SOLID TANT POL	T354K476K020AS	
C052	A080139	001.00 EA	CAPACITR .1 MF 50V CER MONO -20%/+80%	RPE122Z5U104Z050V	
C053	A080139	001.00 EA	CAPACITR .1 MF 50V CER MONO -20%/+80%	RPE122Z5U104Z050V	
C054	A080139	001.00 EA	CAPACITR .1 MF 50V CER MONO -20%/+80%	RPE122Z5U104Z050V	
C055	A080139	001.00 EA	CAPACITR .1 MF 50V CER MONO -20%/+80%	RPE122Z5U104Z050V	
C056	A080139	001.00 EA	CAPACITR .1 MF 50V CER MONO -20%/+80%	RPE122Z5U104Z050V	
C057	A080139	001.00 EA	CAPACITR .1 MF 50V CER MONO -20%/+80%	RPE122Z5U104Z050V	
C058	A080139	001.00 EA	CAPACITR .1 MF 50V CER MONO -20%/+80%	RPE122Z5U104Z050V	
C059	A080139	001.00 EA	CAPACITR .1 MF 50V CER MONO -20%/+80%	RPE122Z5U104Z050V	
C060	A080139	001.00 EA	CAPACITR .1 MF 50V CER MONO -20%/+80%	RPE122Z5U104Z050V	
C061	A080139	001.00 EA	CAPACITR .1 MF 50V CER MONO -20%/+80%	RPE122Z5U104Z050V	
C062	A080139	001.00 EA	CAPACITR .1 MF 50V CER MONO -20%/+80%	RPE122Z5U104Z050V	
C063	A035654	001.00 EA	CAPACITR 10 MF 25V 10% SOLID TANT	T354E106K025AS	
C064	A035654	001.00 EA	CAPACITR 10 MF 25V 10% SOLID TANT	T354E106K025AS	
C065	A080139	001.00 EA	CAPACITR .1 MF 50V CER MONO -20%/+80%	RPE122Z5U104Z050V	
C066	A078600	000.00 FT	NOT ASSIGNED	FOR ENG ONLY	
DS001	A177167	001.00 EA	LAMP LED YEL REC .1 X .3 2.2V 20MA	HLMP-0400	
DS002	A177167	001.00 EA	LAMP LED YEL REC .1 X .3 2.2V 20MA	HLMP-0400	
J001	A174930	001.00 EA	CONN HDR SGL ROW STR 3-PIN PC MT	MLSS100-3	
J002	A177303	001.00 EA	BARRIER STRIP 8-TERM SGL ROW	17-15-78-9	
J003	A174930	001.00 EA	CONN HDR SGL ROW STR 3-PIN PC MT	MLSS100-3	
J004	A177303	001.00 EA	BARRIER STRIP 8-TERM SGL ROW	17-15-78-9	
J005	A087036	001.00 EA	CONN HEADER DBL ROW STRAIGHT 34-PIN PC MT SHRO	1-103169-5	00779
J006	A087451	001.00 EA	CONN HEADER DBL ROW STRAIGHT 26-PIN PC MT	1-103169-1	00779
J007	A173953	001.00 EA	CONN RECT 9-COND MALE RT ANGLE PC MT	H2M9RA29CP	
J008	A173954	001.00 EA	CONN RECT 25-COND FEMALE RT ANGLE PC MT	H2R25RA29CP	
J009	A173933	001.00 EA	CONNECTR 24 PIN DOUBLE READOUT RT ANG PC MT	552791-1	00779
J010	A087229	001.00 EA	CONN HEADER SGL ROW STRAIGHT 2-PIN PC MT	87220-2	00779
J011	A087229	001.00 EA	CONN HEADER SGL ROW STRAIGHT 2-PIN PC MT	87220-2	00779
J012	A174000	000.00 EA	NOT USED ON THIS ASSEMBLY		
J013	A174000	000.00 EA	NOT USED ON THIS ASSEMBLY		
J014	A174000	000.00 EA	NOT USED ON THIS ASSEMBLY		
J015	A087229	001.00 EA	CONN HEADER SGL ROW STRAIGHT 2-PIN PC MT	87220-2	00779
J016	A087033	001.00 EA	CONN HEADER DBL ROW STRAIGHT 10-PIN PC MT	103168-3	00779
J017	A087419	001.00 EA	CONN HEADER DBL ROW STRAIGHT 16-PIN PC MT	87227-8	00779
J018	A087419	001.00 EA	CONN HEADER DBL ROW STRAIGHT 16-PIN PC MT	87227-8	00779
K001	A177023	001.00 EA	RELAY 5VDC DPDT DIP SEALED	DF2E-DC5V	
L001	A078716	001.00 EA	INDUCTOR 100 UH SUBMIN UNSHLD 10%	IR-2 100UH	
L002	A078716	001.00 EA	INDUCTOR 100 UH SUBMIN UNSHLD 10%	IR-2 100UH	
Q002	A083032	001.00 EA	TRANSSTR 2N2222A NPN SIL	FSC 2N2222A	
Q004	A077147	001.00 EA	TRANSSTR 2N3947 NPN SIL	MOT 2N3947	
RT001	A175463	001.00 EA	THERMSTR 500HM 80DEG C PTC SWG	KTC RL3006-50-80-25-	
R001	A074696	001.00 EA	RESISTOR 470 OHM 1/4W 5% COMP	CR07G471JS	
R002	A074696	001.00 EA	RESISTOR 470 OHM 1/4W 5% COMP	CR07G471JS	
R003	A074696	001.00 EA	RESISTOR 470 OHM 1/4W 5% COMP	CR07G471JS	
R004	A077524	001.00 EA	RESISTOR 75 OHM 1/4W 5% COMP	RCR07G750JS	
R005	A077524	001.00 EA	RESISTOR 75 OHM 1/4W 5% COMP	RCR07G750JS	
R006	A077524	001.00 EA	RESISTOR 75 OHM 1/4W 5% COMP	RCR07G750JS	
R007	A074710	001.00 EA	RESISTOR 2.2K OHM 1/4W 5% COMP	RCR07G222JS	
R008	A074710	001.00 EA	RESISTOR 2.2K OHM 1/4W 5% COMP	RCR07G222JS	
R009	A074710	001.00 EA	RESISTOR 2.2K OHM 1/4W 5% COMP	RCR07G222JS	

A328086 ASSY PWB MOTHEROARD DAS A328086

Revision A
Effective: July 01, 1990

REF	SA PART	Qty	Description	Mfr Part	CAGE
R010	A074710	001.00 EA	RESISTOR 2.2K OHM 1/4W 5% COMP	RCR07G222JS	
R011	A079713	001.00 EA	RESISTOR 2.00K OHM RN55C 1% MTL FLM	XZ RN55C2001F	
R012	A083873	001.00 EA	RESISTOR 422 OHM RN55C 1% MTL FLM	XZ RN55C 4220F	
R013	A079011	001.00 EA	RESISTOR 2.49K OHM RN55C 1% MTL FLM	DP CMF55-70-2491FC/	
R014	A079713	001.00 EA	RESISTOR 2.00K OHM RN55C 1% MTL FLM	XZ RN55C2001F	
R015	A079011	001.00 EA	RESISTOR 2.49K OHM RN55C 1% MTL FLM	DP CMF55-70-2491FC/	
R016	A075651	001.00 EA	RESISTOR 2.0K OHM 1/4W 5% COMP	RCR07G202JS	
R017	A079011	001.00 EA	RESISTOR 2.49K OHM RN55C 1% MTL FLM	DP CMF55-70-2491FC/	
R018	A079011	001.00 EA	RESISTOR 2.49K OHM RN55C 1% MTL FLM	DP CMF55-70-2491FC/	
R019	A074675	001.00 EA	RESISTOR 100 OHM 1/4W 5% COMP	CR07G101JS	
R020	A074702	001.00 EA	RESISTOR 1.0K OHM 1/4W 5% COMP	RCR07G102JS	
R021	A079713	001.00 EA	RESISTOR 2.00K OHM RN55C 1% MTL FLM	XZ RN55C2001F	
R022	A083221	001.00 EA	RESISTOR 4.42K OHM RN55C 1% MTL FLM	DP RN55C4421F	
R023	A074680	001.00 EA	RESISTOR 150 OHM 1W 10% COMP	RCR32G151JS	
R024	A074702	001.00 EA	RESISTOR 1.0K OHM 1/4W 5% COMP	RCR07G102JS	
R025	A074722	001.00 EA	RESISTOR 4.7K OHM 1/4W 5% COMP	RCR07G472JS	
R026	A083853	001.00 EA	RESISTOR 82.5 OHM RN55C 1% MTL FLM	XZ RN55C82R5F	
R027	A083889	001.00 EA	RESISTOR 1.40K OHM RN55C 1% MTL FLM	XZ RN55C 1401F	
R028	A083905	001.00 EA	RESISTOR 3.65K OHM RN55C 1% MTL FLM	XZ RN55C 3651F	
R029	A083905	001.00 EA	RESISTOR 3.65K OHM RN55C 1% MTL FLM	XZ RN55C 3651F	
R030	A083889	001.00 EA	RESISTOR 1.40K OHM RN55C 1% MTL FLM	XZ RN55C 1401F	
R031	A082444	001.00 EA	RESISTOR 6.8 OHM 1/4W 5% COMP	CR07G6R8JS	
R032	A074700	001.00 EA	RESISTOR 820 OHM 1/4W 5% COMP	CR07G821JS	
R033	A082444	001.00 EA	RESISTOR 6.8 OHM 1/4W 5% COMP	CR07G6R8JS	
R034	A074696	001.00 EA	RESISTOR 470 OHM 1/4W 5% COMP	CR07G471JS	
SP001	A176977	000.00 EA	ALARM .1-324KHZ 105DB 30VPP MAX	PKD33EP-01R	
S001	A173960	001.00 EA	SWITCH SPST 8 POS DIP RT ANGLE W/ SEAL	206-8RAST	
S002	A173960	001.00 EA	SWITCH SPST 8 POS DIP RT ANGLE W/ SEAL	206-8RAST	
TB001	A328099	001.00 EA	TERMINAL BLOCK PC MT 3-SECTION	7003000	
TP001	A078600	000.00 FT	NOT ASSIGNED	FOR ENG ONLY	
TP002	A082909	001.00 EA	TERMINAL PRESS MT DISCONNECT .058 PIN	60599-1	00779
TP003	A082909	001.00 EA	TERMINAL PRESS MT DISCONNECT .058 PIN	60599-1	00779
TP004	A082909	001.00 EA	TERMINAL PRESS MT DISCONNECT .058 PIN	60599-1	00779
TP005	A082909	001.00 EA	TERMINAL PRESS MT DISCONNECT .058 PIN	60599-1	00779
TP006	A082909	001.00 EA	TERMINAL PRESS MT DISCONNECT .058 PIN	60599-1	00779
TP007	A082909	001.00 EA	TERMINAL PRESS MT DISCONNECT .058 PIN	60599-1	00779
TP008	A082909	001.00 EA	TERMINAL PRESS MT DISCONNECT .058 PIN	60599-1	00779
TP009	A082909	001.00 EA	TERMINAL PRESS MT DISCONNECT .058 PIN	60599-1	00779
TP010	A082909	001.00 EA	TERMINAL PRESS MT DISCONNECT .058 PIN	60599-1	00779
U001	A093980	001.00 EA	IC LINE TRANSCEIVER RS-232	MAX 232CPE	
U002	A093980	001.00 EA	IC LINE TRANSCEIVER RS-232	MAX 232CPE	
U003	A093980	001.00 EA	IC LINE TRANSCEIVER RS-232	MAX 232CPE	
U004	A093980	001.00 EA	IC LINE TRANSCEIVER RS-232	MAX 232CPE	
U005	A174000	000.00 EA	NOT USED ON THIS ASSEMBLY		
U006	A174000	000.00 EA	NOT USED ON THIS ASSEMBLY		
U007	A174000	000.00 EA	NOT USED ON THIS ASSEMBLY		
U008	A086899	001.00 EA	RESISTOR NETWORK 9 3.3K OHM 2% 10 SIP	4310R-101-332	
U009	A173638	001.00 EA	IC BUS TRANSCVR IEEE 488 INTERFACE MULTI	SN75162BN	
U010	A173636	001.00 EA	IC BUS TRANSCVR IEEE 488 INTERFACE	SN75160BN	
U011	A173221	001.00 EA	IC CMOS GATE NAND 2-IN QUAD	NSC MM74HC00N	
U012	A174227	001.00 EA	IC CMOS LATCH 8-BIT ADDRESSABLE	CD74HC259E	
U013	A177272	001.00 EA	IC TTL MLTPLXR 4-B/1-CH TO 1DL	SN74HC253N	
U014	A172458	001.00 EA	IC CMOS FLIP-FLOP TYPE-D DUAL	MM74HC74N	
U015	A083240	001.00 EA	IC COMPARATOR-VOLTAGE 14L-DIP QUAD	UA339PC	

A328086 ASSY PWB MOTHEROARD DAS A328086

Revision A
Effective: July 01, 1990

REF	SA PART	Qty	Description	Mfr Part	CAGE
U017	A177244	001.00 EA	IC CMOS BFR/LINE DRIVER 10-B INVERT	AM29C828PC	
U018	A078600	001.00 FT	NOT ASSIGNED	FOR ENG ONLY	
U019	A177273	001.00 EA	OSCILTR 6.176MHZ TCXO ECL OUT	03-01994-003	
U020	A078600	000.00 FT	NOT ASSIGNED	FOR ENG ONLY	
U021	A172319	001.00 EA	IC VOLTAGE REFERENCE 2.5V	AD1403N	
U022	A306194	001.00 EA	ASSY PAL U22 MOTHERBOARD DAS	PAL U22	
U023	A306196	001.00 EA	ASSY PAL U23 MOTHERBOARD DAS	PAL U23	
U024	A087092	001.00 EA	RESISTOR NETWORK 9 22K OHM 2% 10 SIP	BLI 4310R-101-223	
U025	A089523	001.00 EA	RESISTOR NETWORK 5 22K OHM 2% 6 SIP	BLI 4306R-101-223	
U026	A174293	001.00 EA	IC CMOS SCHMITT TRIGGER-INV	MOT SN74HC14N	
XA011	A173711	001.00 EA	CONN RECT 96-COND FEM PNL MT STRAIGHT PC MT	532504-1	00779
XA012	A173711	001.00 EA	CONN RECT 96-COND FEM PNL MT STRAIGHT PC MT	532504-1	00779
XA021	A173711	001.00 EA	CONN RECT 96-COND FEM PNL MT STRAIGHT PC MT	532504-1	00779
XA022	A173711	001.00 EA	CONN RECT 96-COND FEM PNL MT STRAIGHT PC MT	532504-1	00779
XA031	A173711	001.00 EA	CONN RECT 96-COND FEM PNL MT STRAIGHT PC MT	532504-1	00779
XA032	A173711	001.00 EA	CONN RECT 96-COND FEM PNL MT STRAIGHT PC MT	532504-1	00779
XA041	A173711	001.00 EA	CONN RECT 96-COND FEM PNL MT STRAIGHT PC MT	532504-1	00779
XA042	A173711	001.00 EA	CONN RECT 96-COND FEM PNL MT STRAIGHT PC MT	532504-1	00779
XA051	A173711	001.00 EA	CONN RECT 96-COND FEM PNL MT STRAIGHT PC MT	532504-1	00779
XA052	A173711	001.00 EA	CONN RECT 96-COND FEM PNL MT STRAIGHT PC MT	532504-1	00779
XA061	A173711	001.00 EA	CONN RECT 96-COND FEM PNL MT STRAIGHT PC MT	532504-1	00779
XA062	A173711	001.00 EA	CONN RECT 96-COND FEM PNL MT STRAIGHT PC MT	532504-1	00779
XA071	A173711	001.00 EA	CONN RECT 96-COND FEM PNL MT STRAIGHT PC MT	532504-1	00779
XA072	A173711	001.00 EA	CONN RECT 96-COND FEM PNL MT STRAIGHT PC MT	532504-1	00779
XA081	A173711	001.00 EA	CONN RECT 96-COND FEM PNL MT STRAIGHT PC MT	532504-1	00779
XA082	A173711	001.00 EA	CONN RECT 96-COND FEM PNL MT STRAIGHT PC MT	532504-1	00779
XA091	A173711	001.00 EA	CONN RECT 96-COND FEM PNL MT STRAIGHT PC MT	532504-1	00779
XA092	A173711	001.00 EA	CONN RECT 96-COND FEM PNL MT STRAIGHT PC MT	532504-1	00779
XA101	A173711	001.00 EA	CONN RECT 96-COND FEM PNL MT STRAIGHT PC MT	532504-1	00779
XA102	A173711	001.00 EA	CONN RECT 96-COND FEM PNL MT STRAIGHT PC MT	532504-1	00779
XA111	A173711	001.00 EA	CONN RECT 96-COND FEM PNL MT STRAIGHT PC MT	532504-1	00779
XA112	A173711	001.00 EA	CONN RECT 96-COND FEM PNL MT STRAIGHT PC MT	532504-1	00779
XA121	A173711	001.00 EA	CONN RECT 96-COND FEM PNL MT STRAIGHT PC MT	532504-1	00779
XA122	A173711	001.00 EA	CONN RECT 96-COND FEM PNL MT STRAIGHT PC MT	532504-1	00779
XA131	A173711	001.00 EA	CONN RECT 96-COND FEM PNL MT STRAIGHT PC MT	532504-1	00779
XA132	A173711	001.00 EA	CONN RECT 96-COND FEM PNL MT STRAIGHT PC MT	532504-1	00779
XA141	A173711	001.00 EA	CONN RECT 96-COND FEM PNL MT STRAIGHT PC MT	532504-1	00779
XA142	A173711	001.00 EA	CONN RECT 96-COND FEM PNL MT STRAIGHT PC MT	532504-1	00779
XA151	A173711	001.00 EA	CONN RECT 96-COND FEM PNL MT STRAIGHT PC MT	532504-1	00779
XA152	A173711	001.00 EA	CONN RECT 96-COND FEM PNL MT STRAIGHT PC MT	532504-1	00779
XA153	A176975	001.00 EA	CONN RECT 48 COND FEM STRAIGHT PC MT	535071-4	00779
XA161	A173711	001.00 EA	CONN RECT 96-COND FEM PNL MT STRAIGHT PC MT	532504-1	00779
XA162	A173711	001.00 EA	CONN RECT 96-COND FEM PNL MT STRAIGHT PC MT	532504-1	00779
XA171	A173711	001.00 EA	CONN RECT 96-COND FEM PNL MT STRAIGHT PC MT	532504-1	00779
XA172	A173711	001.00 EA	CONN RECT 96-COND FEM PNL MT STRAIGHT PC MT	532504-1	00779
XU001	A086649	001.00 EA	SOCKET 16 PIN DIP PC MT	ICT-163-S-TT	
XU002	A086649	001.00 EA	SOCKET 16 PIN DIP PC MT	ICT-163-S-TT	
XU003	A086649	001.00 EA	SOCKET 16 PIN DIP PC MT	ICT-163-S-TT	
XU004	A086649	001.00 EA	SOCKET 16 PIN DIP PC MT	ICT-163-S-TT	
XU005	A078600	000.00 FT	NOT ASSIGNED	FOR ENG ONLY	
XU006	A078600	000.00 FT	NOT ASSIGNED	FOR ENG ONLY	
XU007	A078600	000.00 FT	NOT ASSIGNED	FOR ENG ONLY	
XU009	A089605	001.00 EA	SOCKET 22 PIN DIP PC MT	RBN ICT-224-S-TG	
XU010	A086897	001.00 EA	SOCKET 20 PIN DIP PC MT	RBN ICT-203-S-TG	

A328086 ASSY PWB MOTHEROARD DAS A328086

Revision A
Effective: July 01, 1990

REF	SA PART	Qty	Description	Mfr Part	CAGE
XU011	A086648	001.00 EA	SOCKET 14 PIN DIP PC MT	RBN ICT-143-S-TG30	
XU012	A086649	001.00 EA	SOCKET 16 PIN DIP PC MT	ICT-163-S-TT	
XU013	A086649	001.00 EA	SOCKET 16 PIN DIP PC MT	ICT-163-S-TT	
XU014	A086648	001.00 EA	SOCKET 14 PIN DIP PC MT	RBN ICT-143-S-TG30	
XU015	A086648	001.00 EA	SOCKET 14 PIN DIP PC MT	RBN ICT-143-S-TG30	
XU017	A173737	001.00 EA	SOCKET 24 PIN DIP PC MT LOW PROFILE OPEN UL94V	610-24-CC-D	
XU021	A087983	001.00 EA	SOCKET 8 PIN DIP PC MT	RBN ICT-083-S-TG30	
XU022	A173737	001.00 EA	SOCKET 24 PIN DIP PC MT LOW PROFILE OPEN UL94V	610-24-CC-D	
XU023	A173737	001.00 EA	SOCKET 24 PIN DIP PC MT LOW PROFILE OPEN UL94V	610-24-CC-D	
XU026	A086648	001.00 EA	SOCKET 14 PIN DIP PC MT	RBN ICT-143-S-TG30	
001	A306218	001.00 EA	PWB MOTHERBOARD DAS	PER SA DWG. 306218 O	
002	A177177	002.00 EA	TERMNL QUICK DISC 20-16FEM.187	AMP 42638-2	
004	A086864	000.25 EA	TAPE POLYIMIDE FILM 3/4 IN.		

This page is intentionally blank

CHAPTER 5
DIAGRAMS

INDEX

Drawing Number	Title	Page
306000	AT 9000 Top Assembly	5-5
309649	Power Cord Assembly	5-6
306176	AC Power Harness	5-7
306220A	AC/DC AT 9000 Top Assembly	5-8
327953	AC/DC Power Cable Assembly	5-15
306206	AC/DC Power Harness Assembly	5-16
459033	Mothercard Assembly	5-18
459034	Mothercard Schematic	5-19
456987	AC Power Supply Assembly	5-39
456206	AC Power Supply PWB Assembly	5-41
459041D	Central Processing Unit Assembly	5-42
307218D	Central Processing Unit Subassembly	5-43
307216B	Central Processing Unit Schematic	5-44
306198A	RTC/Terminator Assembly	5-51
328091A	RTC/Terminator Schematic	5-52
306180	AC Fan Assembly	5-56
328077T	Demux Card Assembly	5-57
307223K	Demux Card Subassembly	5-58
307221G	Demux Card Schematic	5-59

INDEX - (Continued)

Drawing Number	Title	Page
328079D	Signal Analysis Card Assembly	5-70
327987B	Signal Analysis Card Schematic	5-72
309124F	Transmitter Card Assembly	5-78
309237F	Transmitter Card/Subassembly	5-79
309235D	Transmitter Card Schematic	5-80
309216	Real-time Clock Card Assembly	5-86
458359	Real-time Clock Card Subassembly	5-87
458358	Real-time Clock Card Schematic	5-88
328078E	DS3 2x2 Card Assembly	5-98
327980E	DS3 2x2 Card Subassembly	5-100
327978D	DS3 2x2 Card Schematic	5-102
309243C	DS3 Two-point Monitor Assembly	5-112
309242B	DS3 Two-point Monitor Subassembly	5-114
309241A	DS3 Two-point Monitor Schematic	5-116
456212E	DS1 2x2 Card Assembly	5-126
456211A	DS1 2x2 Card Subassembly	5-127
456209B	DS1 2x2 Card Schematic	5-129
456225D	DS1 Two-point Monitor Assembly	5-137
456224A	DS1 Two-point Monitor Subassembly	5-138
456223B	DS1 Two-point Monitor Schematic	5-140
	Previous Assemblies	
328086A	Mothercard Assembly	5-148
328084	Mothercard Schematic	5-149
306187	AC Power Supply Assembly	5-169

INDEX - (Continued)

Drawing Number	Title	Page
306178B	Power Supply PWB Assembly	5-170
307219	Central Processing Unit Assembly	5-172
328076B	Transmitter Card Assembly	5-173
327890B	Transmitter Card Assembly	5-174
327888C	Transmitter Card Schematic	5-175
327968G	Real-time Clock Card Assembly	5-185
327885B	Real-time Clock Card Schematic	5-187

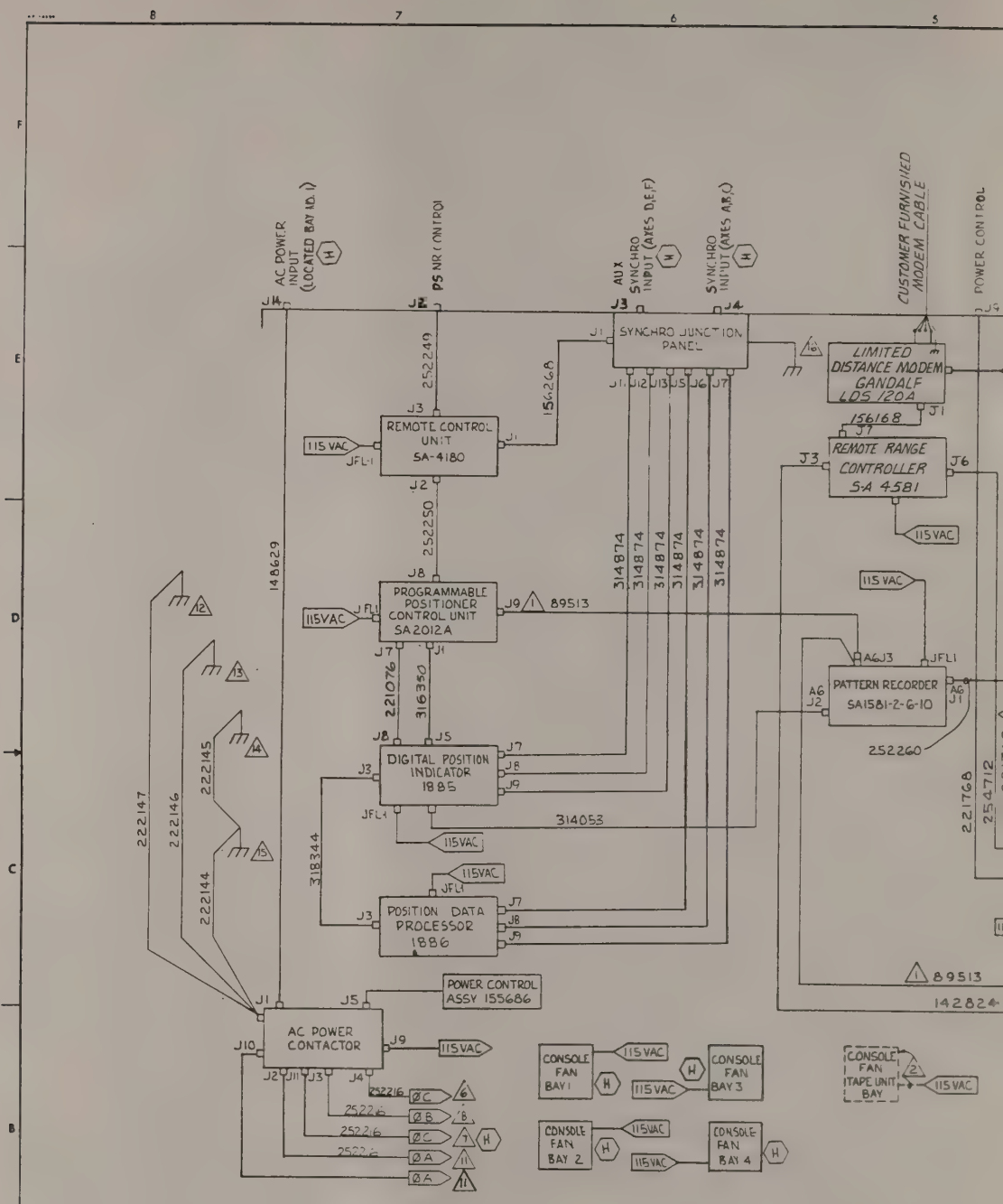

NOTES:

1. STANDARD IEEE 488 CABLE
2. OPTIONAL EQUIPMENT
3. VENDOR SUPPLIED CABLES
4. PART OF PROGRAMMABLE RECEIVER 1780
5. PART OF DIGITAL FREQUENCY DISPLAY 1871
6. AC OUTLET STRIP, BAY NO 1, 115 VAC ØA
7. AC OUTLET STRIP, BAY NO 2, 115 VAC ØB
8. AC OUTLET STRIP, BAY NO 4, 115 VAC ØC.
9. AC OUTLET STRIP, BAY NO 5, 115 VAC ØC MAY BE PLUGGED INTO POWER STRIP IN BAY #1 OR 2
10. CRT J15 IS LOCATED ON EXTREME RIGHT OF CRT AS VIEWED FROM REAR OF U
11. AC OUTLET STRIP, COMPUTER BAY, 115 VAC ØA. (SUPPLIED WITH RACK EXTENDE
12. GROUND STRAP, CONSOLE FRAME, BAY 1 TO POWER CONTACTOR GROUND TERM
13. GROUND STRAP, CONSOLE FRAME, BAY 2 TO POWER CONTACTOR GROUND TERM
14. GROUND STRAP, CONSOLE FRAME, BAY 4 TO POWER CONTACTOR GROUND TERM
15. GROUND STRAP, CONSOLE FRAME, BAY 4 TO CONSOLE FRAME, BAY 5
16. GROUND STRAP, CONSOLE FRAME, BAY 5 TO SYNCHRO JUNCTION PANEL CHAS

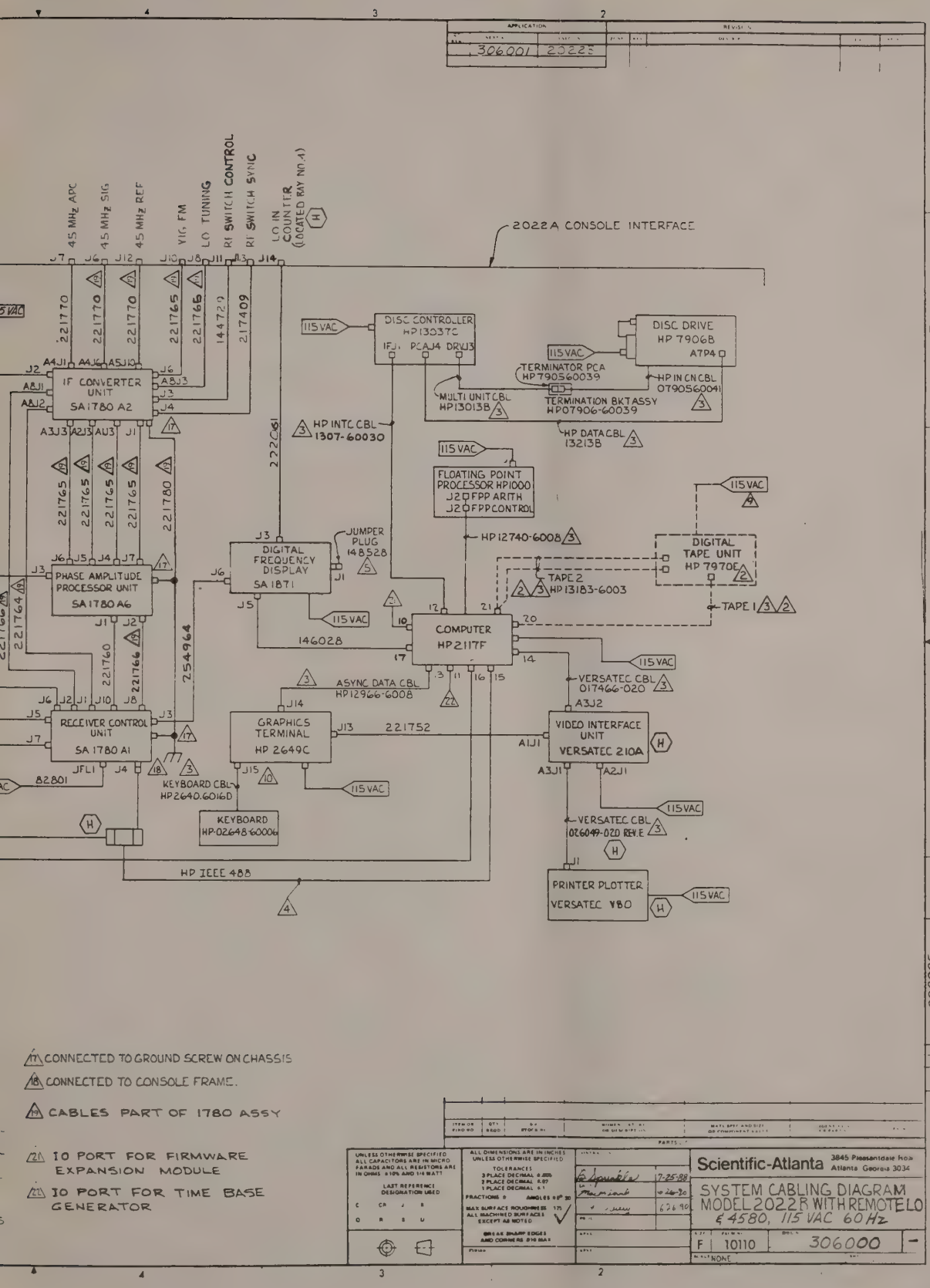

(17) CONNECTED TO GROUND SCREW ON CHASSIS

(18) CONNECTED TO CONSOLE FRAME.

(H) CABLES PART OF 1780 ASSY

(21) IO PORT FOR FIRMWARE EXPANSION MODULE

(22) IO PORT FOR TIME BASE GENERATOR

Scientific-Atlanta	3845 Pleasantdale Road Atlanta Georgia 30340		
SYSTEM CABLING DIAGRAM MODEL 2022R WITH REMOTE LO & 4580, 115 VAC 60 Hz			
F	10110	306000	-
NONE			

306000

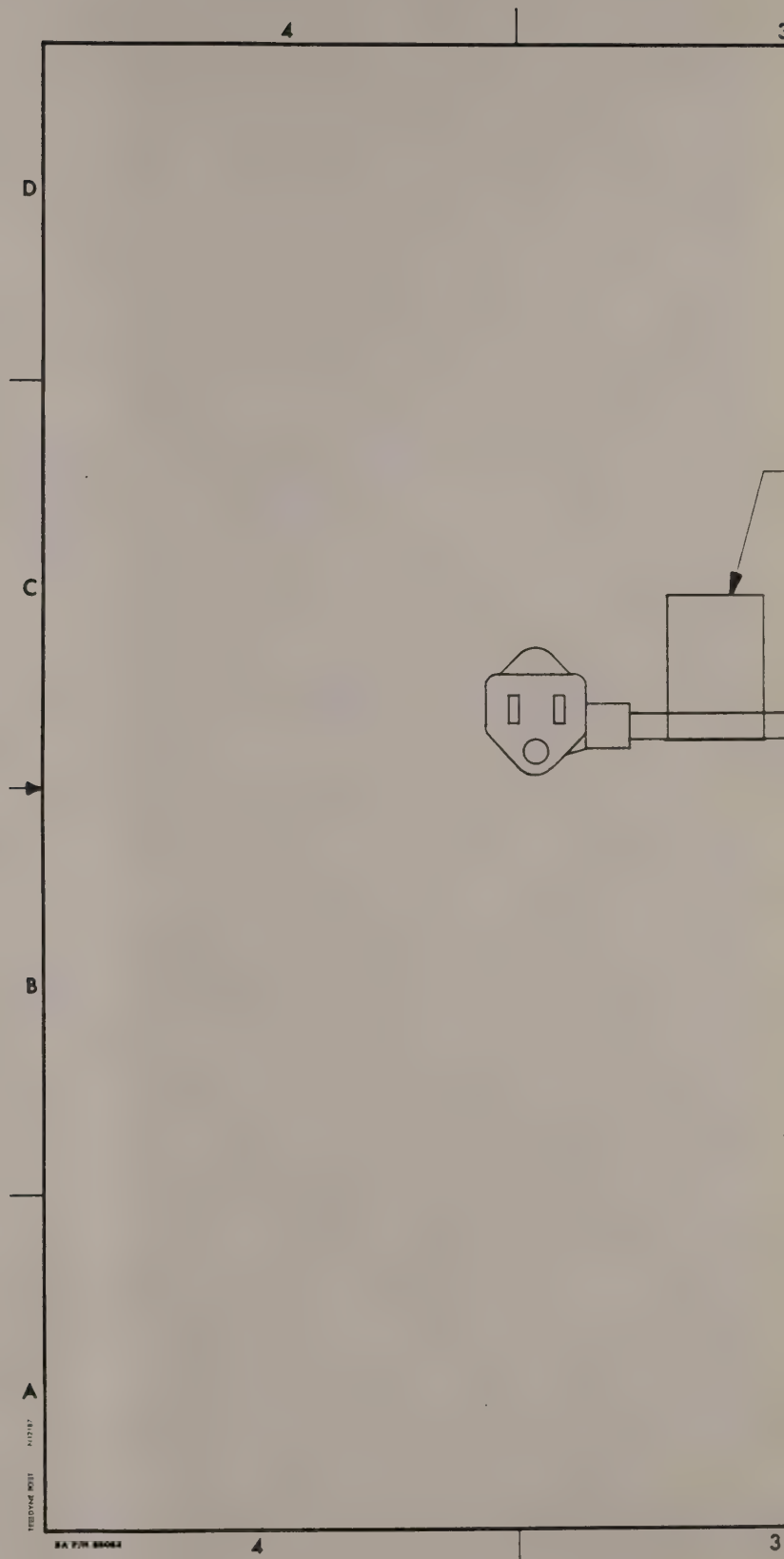
4
3
D
C
B
A
4
3

APPLICATION			REVISIONS				
QTY REQD	NEXT ASSY	USED ON	ZONE	REV	DESCRIPTION	DATE	APPROVED
	SERIES STD			-	INITIAL RELEASE		

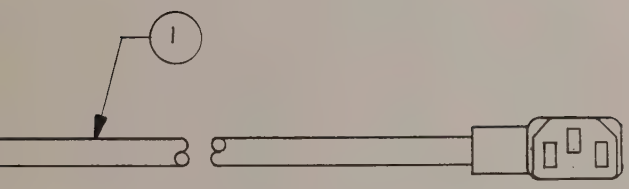

DWG NO 309649 SH 1 REV -

SEE SEPARATE PARTS LIST

ITEM OR FIND NO.	QTY REQD	S-A STOCK NO	NOMENCLATURE OR DESCRIPTION	MATL SPEC AND SIZE OR COMPONENT VALUE	IDENTIFYING OR PART NO	FSCM NO

PARTS LIST

UNLESS OTHERWISE SPECIFIED ALL CAPACITORS ARE IN MICROFARADS AND ALL RESISTORS ARE IN OHMS, ±10% AND 1/4 WATT

LAST REFERENCE DESIGNATION USED

C	CR	J	K
Q	R	S	U

ALL DIMENSIONS ARE IN INCHES UNLESS OTHERWISE SPECIFIED

TOLERANCES
3 PLACE DECIMAL ± .005
2 PLACE DECIMAL ± .02
1 PLACE DECIMAL ± .1

FRACTIONS ± ANGLES ±0° 30'

MAX SURFACE ROUGHNESS ALL MACHINED SURFACES EXCEPT AS NOTED 125 √

BREAK SHARP EDGES AND CORNERS .010 MAX

FINISH NONE

CONTRACT NO.

DWN	Ted Smith	6-14-89
ENGR	[illegible]	6-15-89
CHK	[illegible]	6-15-89
PROD	[illegible]	6-15-89
APVD	[illegible]	
APVD		

Scientific-Atlanta 3845 Pleasantdale Road Atlanta, Georgia 30340

POWER CORD ASSEMBLY

SIZE	FSCM NO	DWG NO.	REV
C	10110	309649	-

SCALE 1/1 SHEET 1 OF 1

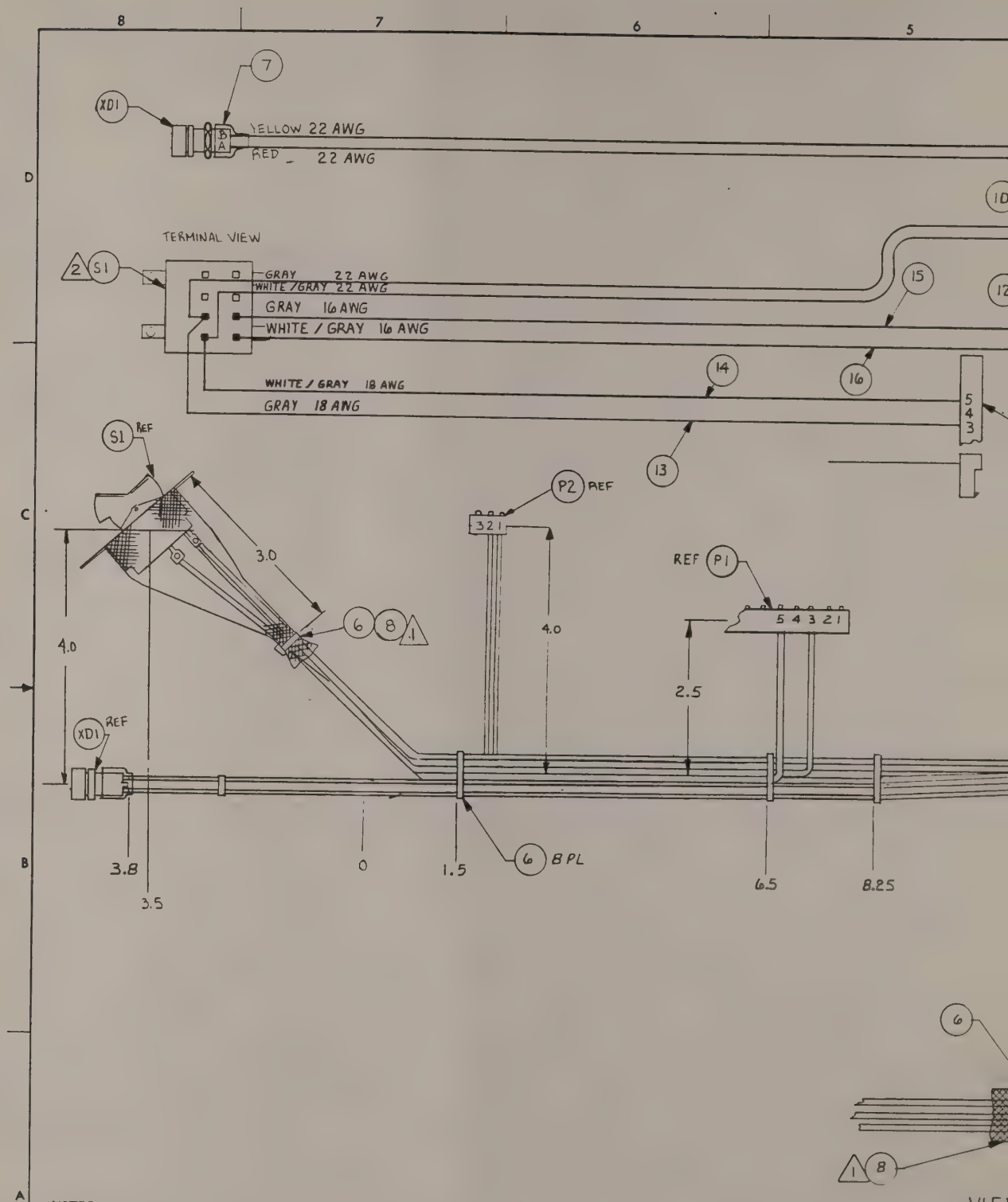

NOTES:

1. CUT 2 PIECES OF ITEM 8 (EXPANDO-BLACK) 4.75" WITH HOT KNIFE.
2. NOTE CONNECTOR ORIENTATION.
3. PREP WIRES AS SHOWN AND ADD INTO HARNESS.
4. ALL DIMENSIONS $^{+.25}_{-.12}$

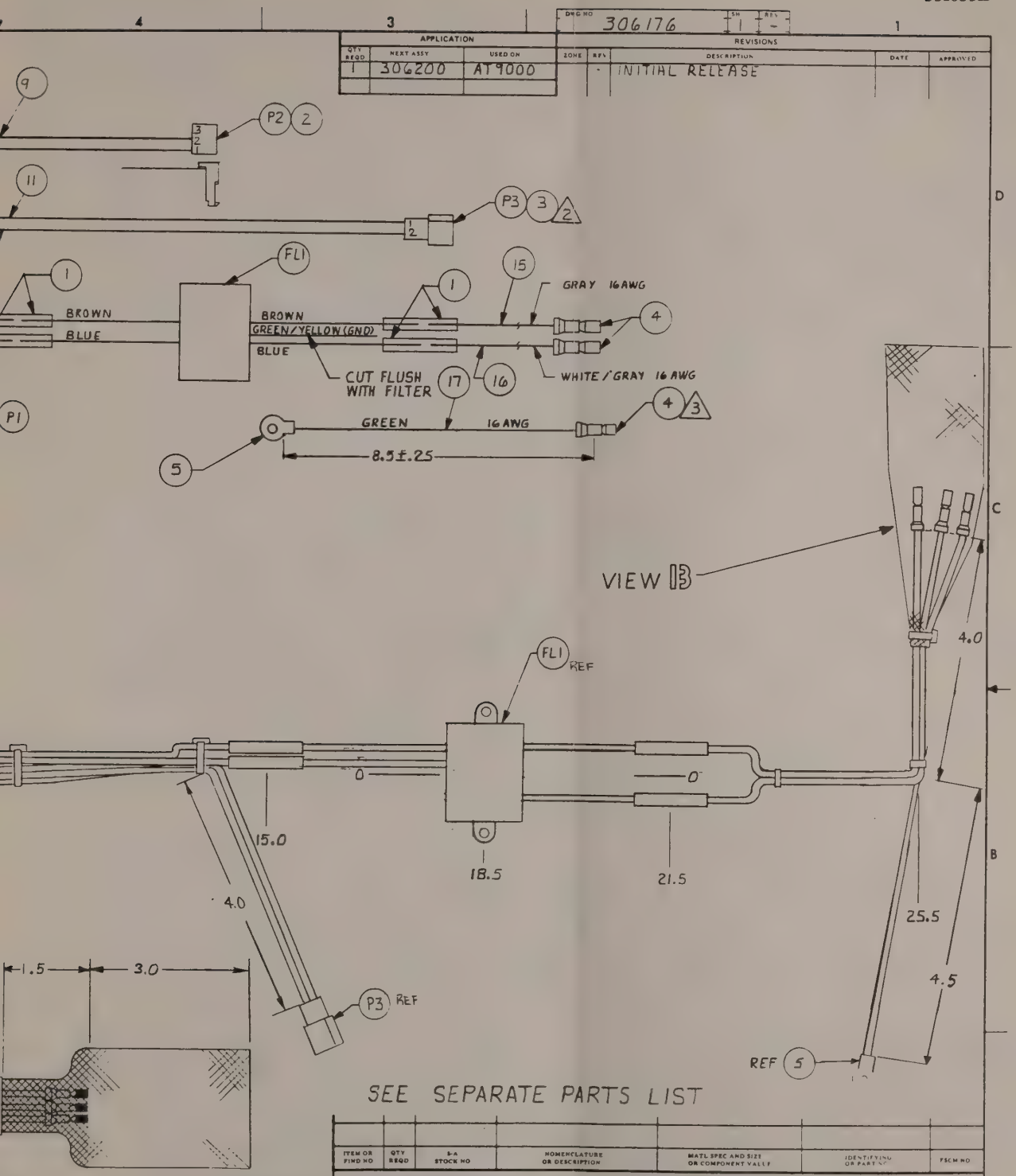
DWG NO 306176
SH 1
REV -
APPLICATION
QTY REQD 1
NEXT ASSY 306200
USED ON AT9000
REVISIONS
ZONE REV DESCRIPTION DATE APPROVED
- INITIAL RELEASE
P2 2
P3 3 2
FL1
BROWN
BLUE
BROWN
GREEN/YELLOW (GND)
BLUE
GRAY 16AWG
WHITE/GRAY 16AWG
CUT FLUSH WITH FILTER
GREEN 16AWG
8.5±.25
VIEW B
FL1 REF
4.0
15.0
18.5
21.5
25.5
4.5
1.5
3.0
P3 REF
REF 5
SEE SEPARATE PARTS LIST
ITEM OR FIND NO
QTY REQD
S-A STOCK NO
NOMENCLATURE OR DESCRIPTION
MATL SPEC AND SIZE OR COMPONENT VALUE
IDENTIFYING OR PART NO
FSCM NO
PARTS LIST
UNLESS OTHERWISE SPECIFIED, ALL CAPACITORS ARE IN MICRO-FARADS AND ALL RESISTORS ARE IN OHMS, ±10% AND 1/4 WATT
LAST REFERENCE DESIGNATION USED
C CR J K
Q R S U
ALL DIMENSIONS ARE IN INCHES UNLESS OTHERWISE SPECIFIED
TOLERANCES
3 PLACE DECIMAL ±.005
2 PLACE DECIMAL ± .02
1 PLACE DECIMAL ±.1
FRACTIONS ± ANGLES ±0° 30'
MAX SURFACE ROUGHNESS 125
ALL MACHINED SURFACES EXCEPT AS NOTED
BREAK SHARP EDGES AND CORNERS .010 MAX
FINISH NONE
CONTRACT NO
DWN 1/18/88
ENGR
CHK 12 1-
PROD
APVD
APVD
Scientific-Atlanta 3845 Pleasantdale Road Atlanta, Georgia 30340
ASSY POWER HARNESS DIGITAL ANALYSIS SYSTEM A.C
SIZE D FSCM NO 10110 DWG NO 306176 REV -
SCALE NONE SHEET 1 OF 1

NOTES:

1. SEE SHEET 6
2. SEE SHEET 6
3. SEE SHEET 6
4. SEE SHEET 6
5. SEE SHEET 6

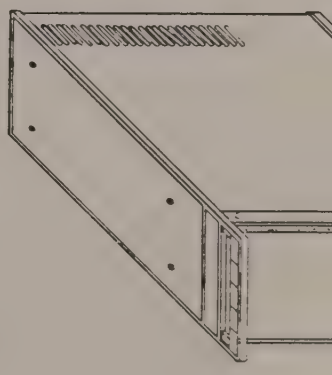

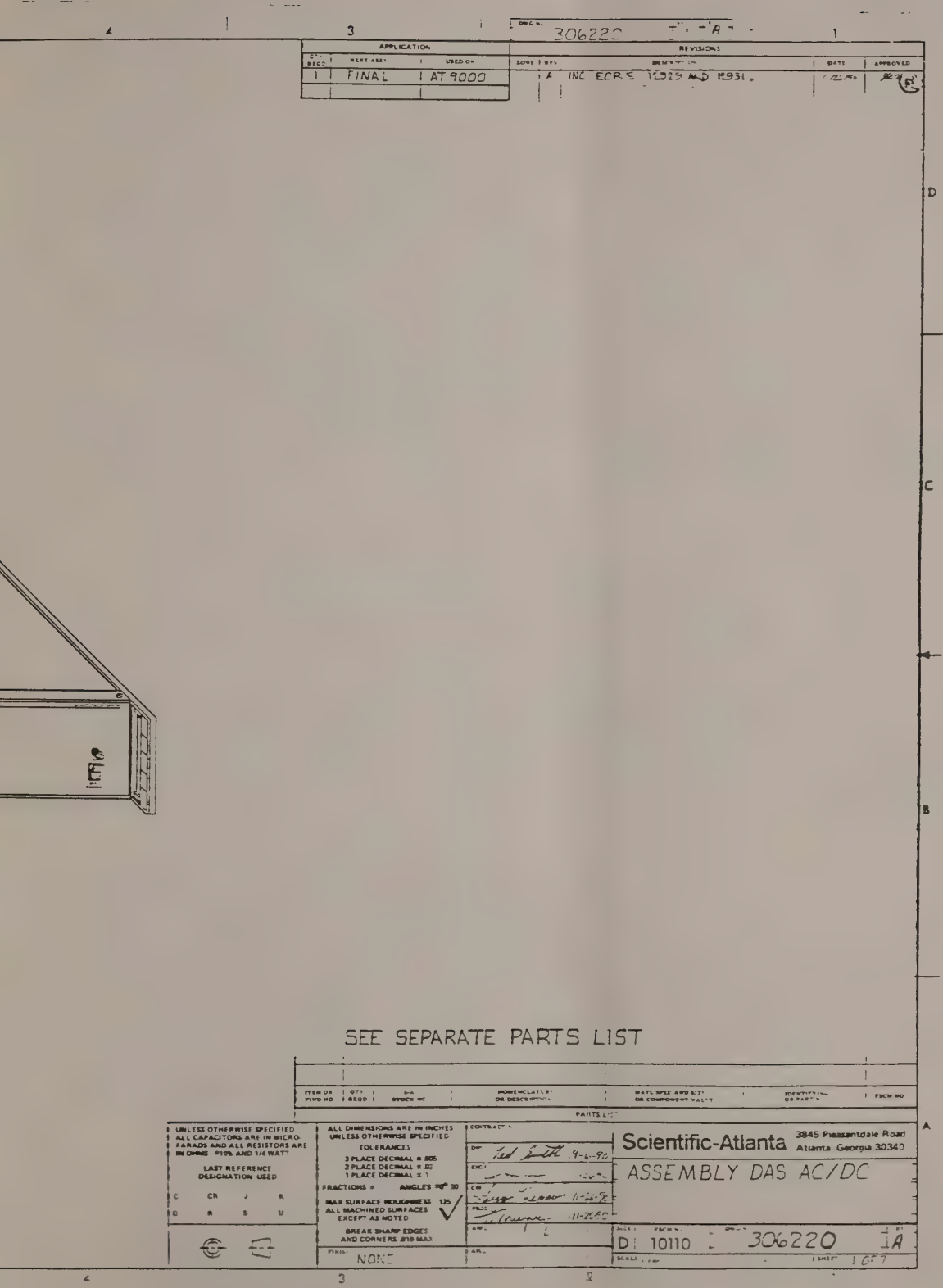
306220
APPLICATION
NEXT ASSY
USED ON
FINAL
AT 9000
REVISIONS
ZONE
REV
DESCRIPTION
DATE
APPROVED
A
INC ECRS 12929 AND 12931.
SEE SEPARATE PARTS LIST
PARTS LIST
UNLESS OTHERWISE SPECIFIED ALL CAPACITORS ARE IN MICRO-FARADS AND ALL RESISTORS ARE IN OHMS ±10% AND 1/4 WATT
LAST REFERENCE DESIGNATION USED
ALL DIMENSIONS ARE IN INCHES UNLESS OTHERWISE SPECIFIED
TOLERANCES
3 PLACE DECIMAL ± .005
2 PLACE DECIMAL ± .02
1 PLACE DECIMAL ± 1
FRACTIONS ± ANGLES ±0° 30
MAX SURFACE ROUGHNESS 125
ALL MACHINED SURFACES EXCEPT AS NOTED
BREAK SHARP EDGES AND CORNERS .010 MAX
FINISH NONE
CONTRACT
Scientific-Atlanta
3845 Pleasantdale Road
Atlanta Georgia 30340
ASSEMBLY DAS AC/DC
D
10110
306220
A
SHEET 1 OF 7

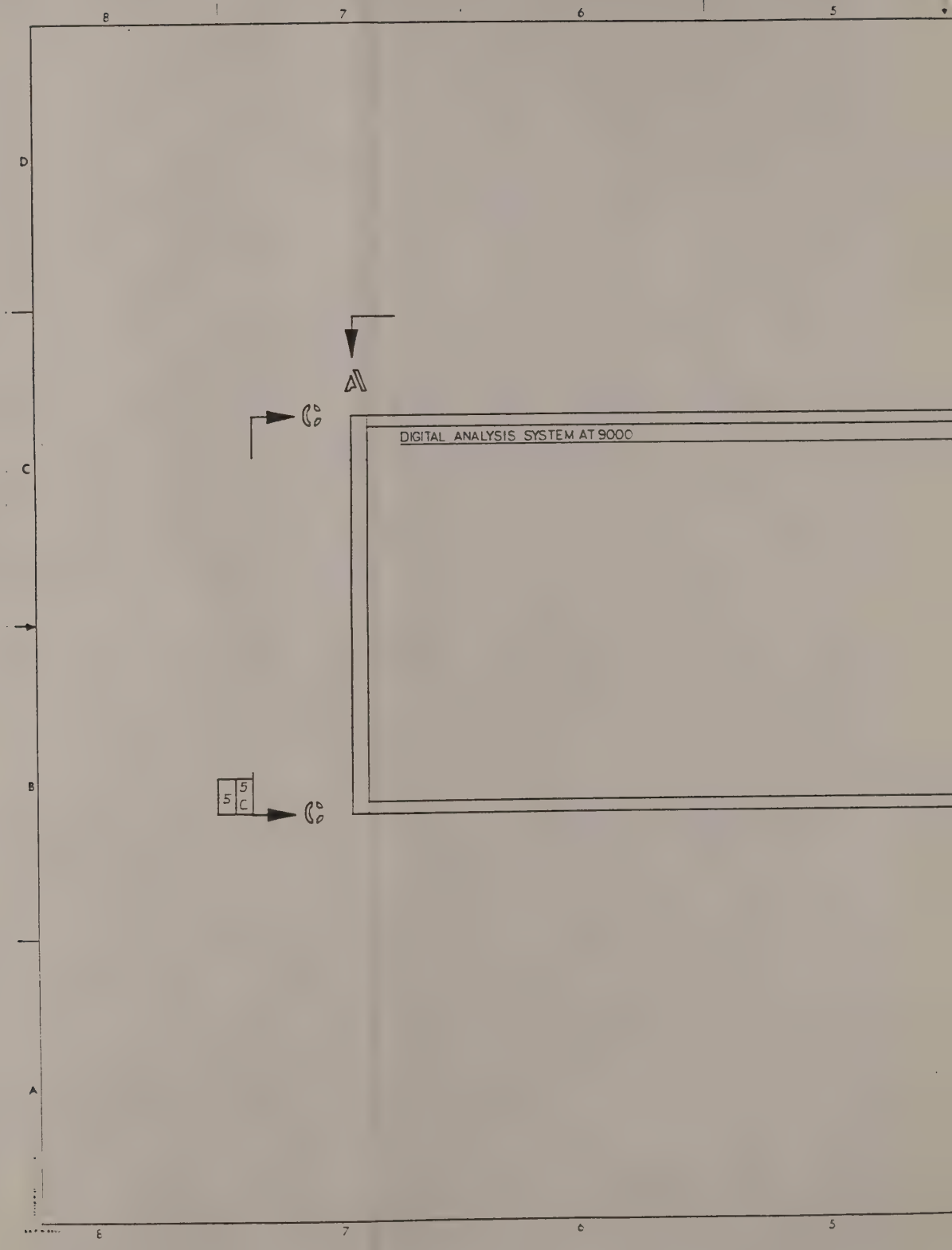
8
7
6
5
D
C
B
A
A1
DIGITAL ANALYSIS SYSTEM AT 9000
5
5
5
C

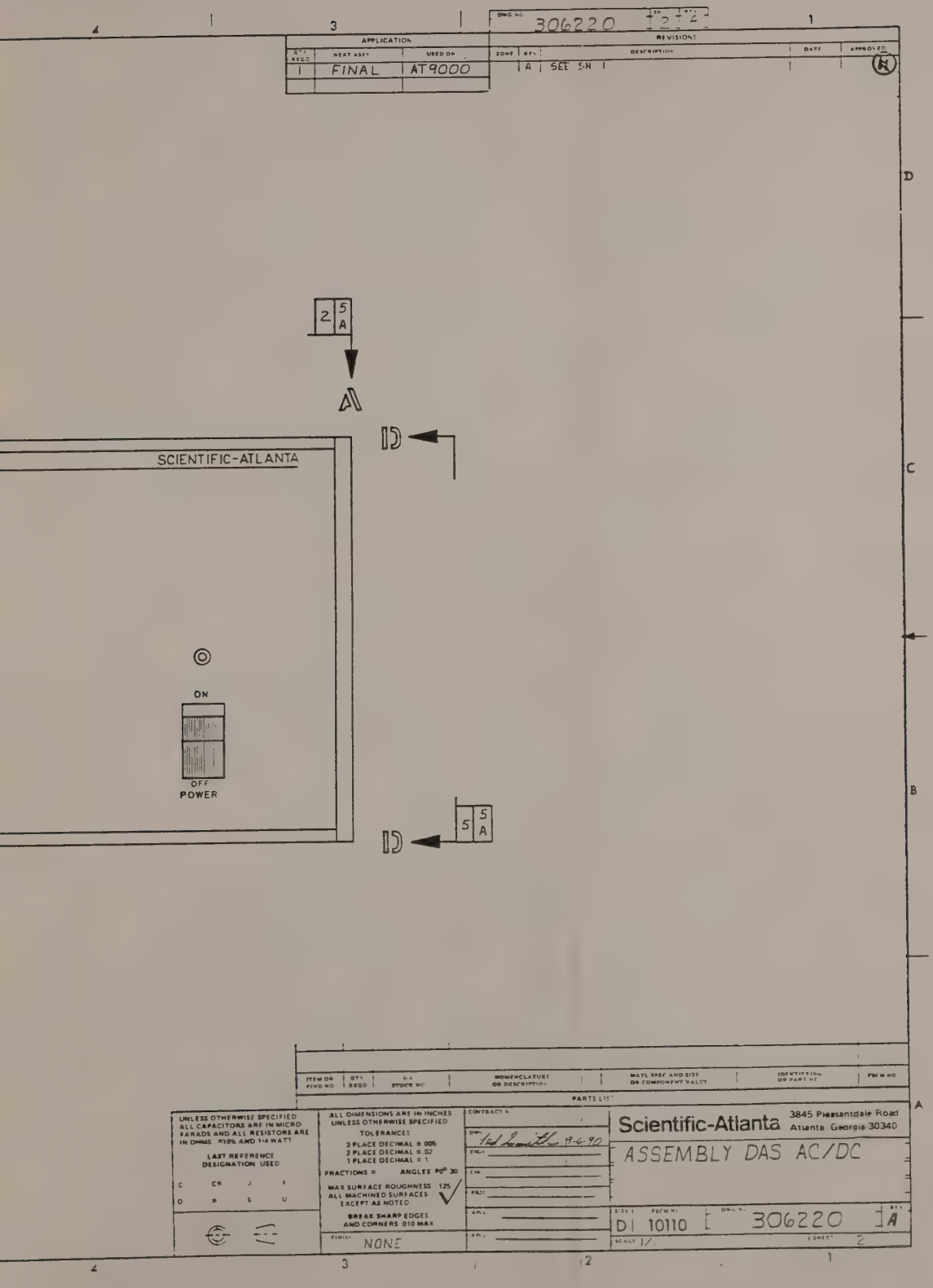
DWG NO 306220
APPLICATION
QTY/ REQD
NEXT ASSY
USED ON
1
FINAL
AT9000
REVISIONS
ZONE
BY
DESCRIPTION
DATE
APPROVED
A
SEE SH 1
2 5 A
A1
D
SCIENTIFIC-ATLANTA
ON
OFF
POWER
5 5 A
D
C
B
A
ITEM OR FIND NO
QTY REQD
NOMENCLATURE OR DESCRIPTION
MATL SPEC AND SIZE OR COMPONENT VALUE
IDENTIFICATION OR PART NO
PARTS LIST
UNLESS OTHERWISE SPECIFIED ALL CAPACITORS ARE IN MICROFARADS AND ALL RESISTORS ARE IN OHMS ±10% AND 1/4 WATT
LAST REFERENCE DESIGNATION USED
C CR J R
D P S U
ALL DIMENSIONS ARE IN INCHES UNLESS OTHERWISE SPECIFIED
TOLERANCES
3 PLACE DECIMAL ± .005
2 PLACE DECIMAL ± .02
1 PLACE DECIMAL ± 1
FRACTIONS ± ANGLES 30'
MAX SURFACE ROUGHNESS 125
ALL MACHINED SURFACES EXCEPT AS NOTED
BREAK SHARP EDGES AND CORNERS .010 MAX
FINISH NONE
CONTRACT #
DWN Ted Smith 11-6-90
ENG
CHK
PROJ
APVL
APVL
Scientific-Atlanta 3845 Pleasantdale Road Atlanta Georgia 30340
ASSEMBLY DAS AC/DC
SIZE D
FSCM NO 10110
DWG NO 306220
REV A
SCALE 1/1
SHEET 2

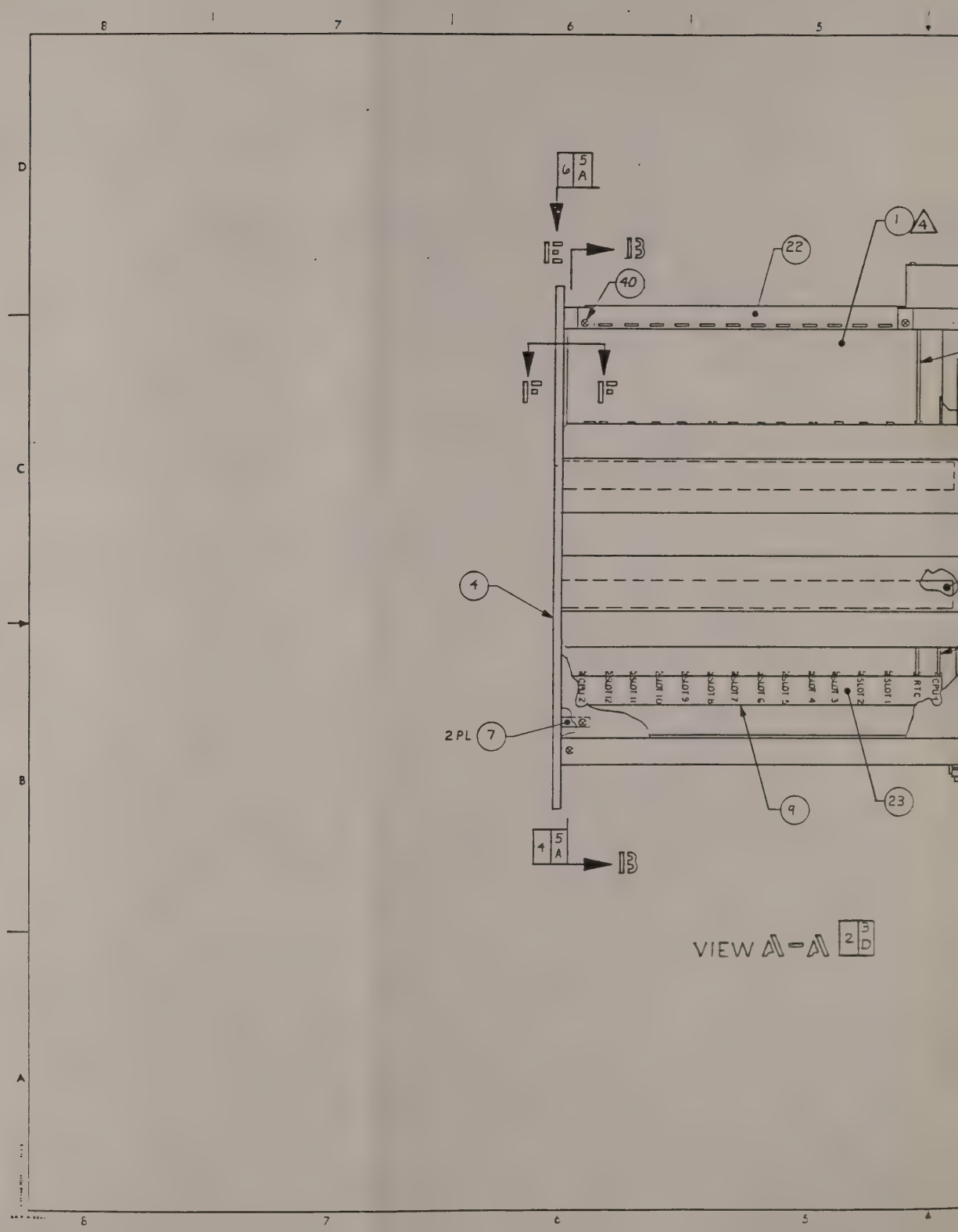

6 5 A
B
40
22
1 4
4
2 PL 7
9
23
4 5 A
B
VIEW A-A 2 3 D

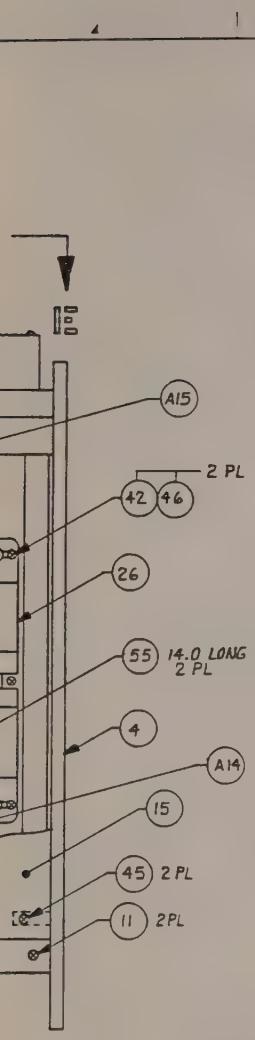

DWG NO 306220 REV A

APPLICATION			REVISIONS				
QTY REQD	NEXT ASSY	USED ON	ZONE	LTR	DESCRIPTION	DATE	APPROVED
1	FINAL	AT9000		A	SEE SHT		

ITEM OR FIND NO	QTY REQD	S-P STOCK NO	NOMENCLATURE OR DESCRIPTION	MATL SPEC AND SIZE OR COMPONENT VALUE	IDENTIFYING OR PART NO	FSCM NO

PARTS LIST

UNLESS OTHERWISE SPECIFIED ALL CAPACITORS ARE IN MICRO FARADS AND ALL RESISTORS ARE IN OHMS ±10% AND 1/4 WATT

LAST REFERENCE DESIGNATION USED

C	CR	J	R
D	R	S	U

ALL DIMENSIONS ARE IN INCHES UNLESS OTHERWISE SPECIFIED

TOLERANCES
3 PLACE DECIMAL ± .005
2 PLACE DECIMAL ± .02
1 PLACE DECIMAL ± 1

FRACTIONS ± ANGLES ±0° 30'

MAX SURFACE ROUGHNESS 125 ALL MACHINED SURFACES EXCEPT AS NOTED

BREAK SHARP EDGES AND CORNERS .010 MAX

FINISH NONE

CONTRACT NO

DRN 19-6-90

ENGR

CHK

PROJ

APVD

APVD

Scientific-Atlanta 3845 Pleasantdale Road Atlanta, Georgia 30340

ASSEMBLY DAS AC/DC

SIZE D | FSCM NO 10110 | DWG NO 306220 | REV A

SCALE 1/2 | SHEET 2

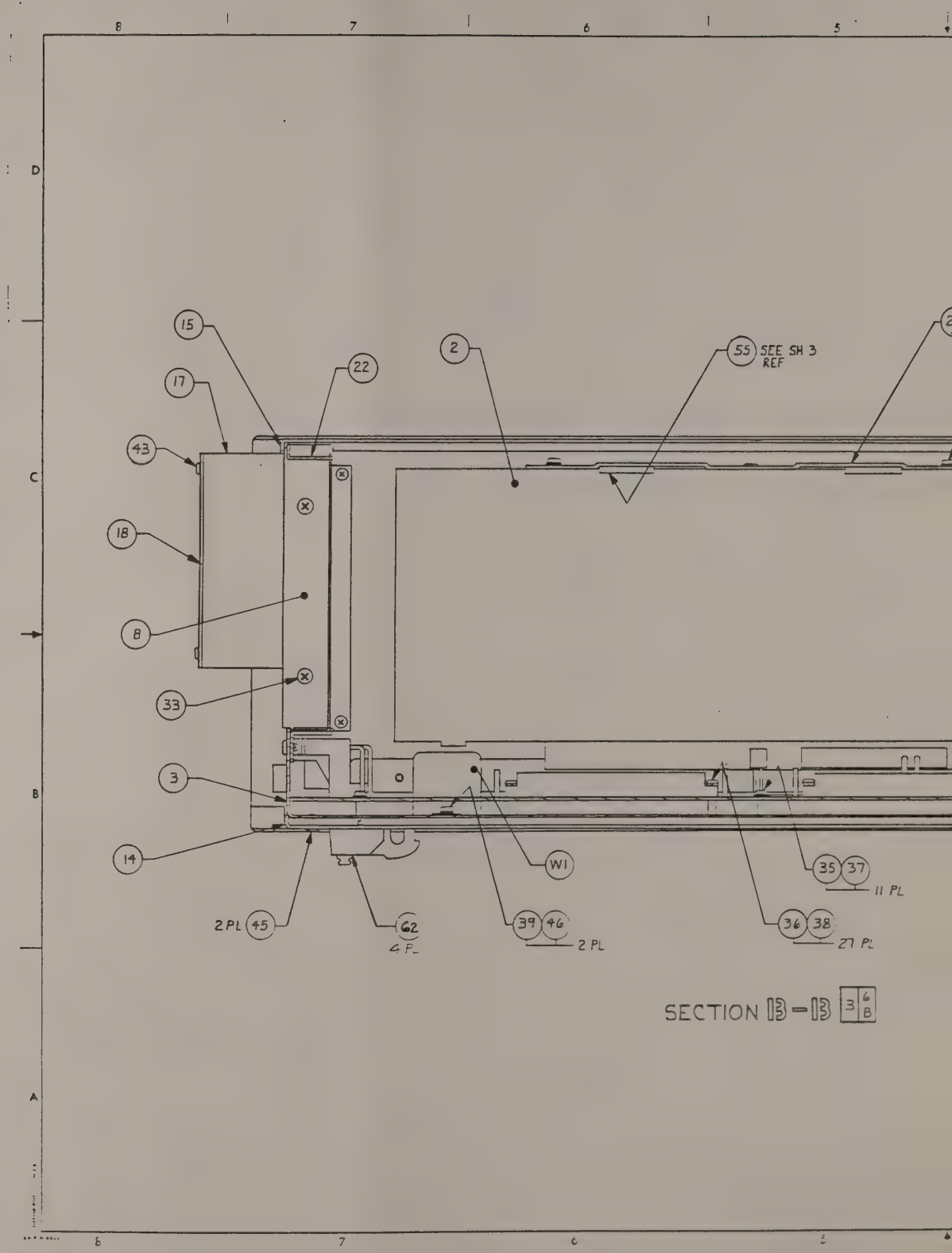

15
17
22
2
55 SEE SH 3 REF
43
18
8
33
3
14
W1
35 37
11 PL
2 PL 45
62
4 PL
39 46
2 PL
36 38
27 PL
SECTION B-B
3 6 B

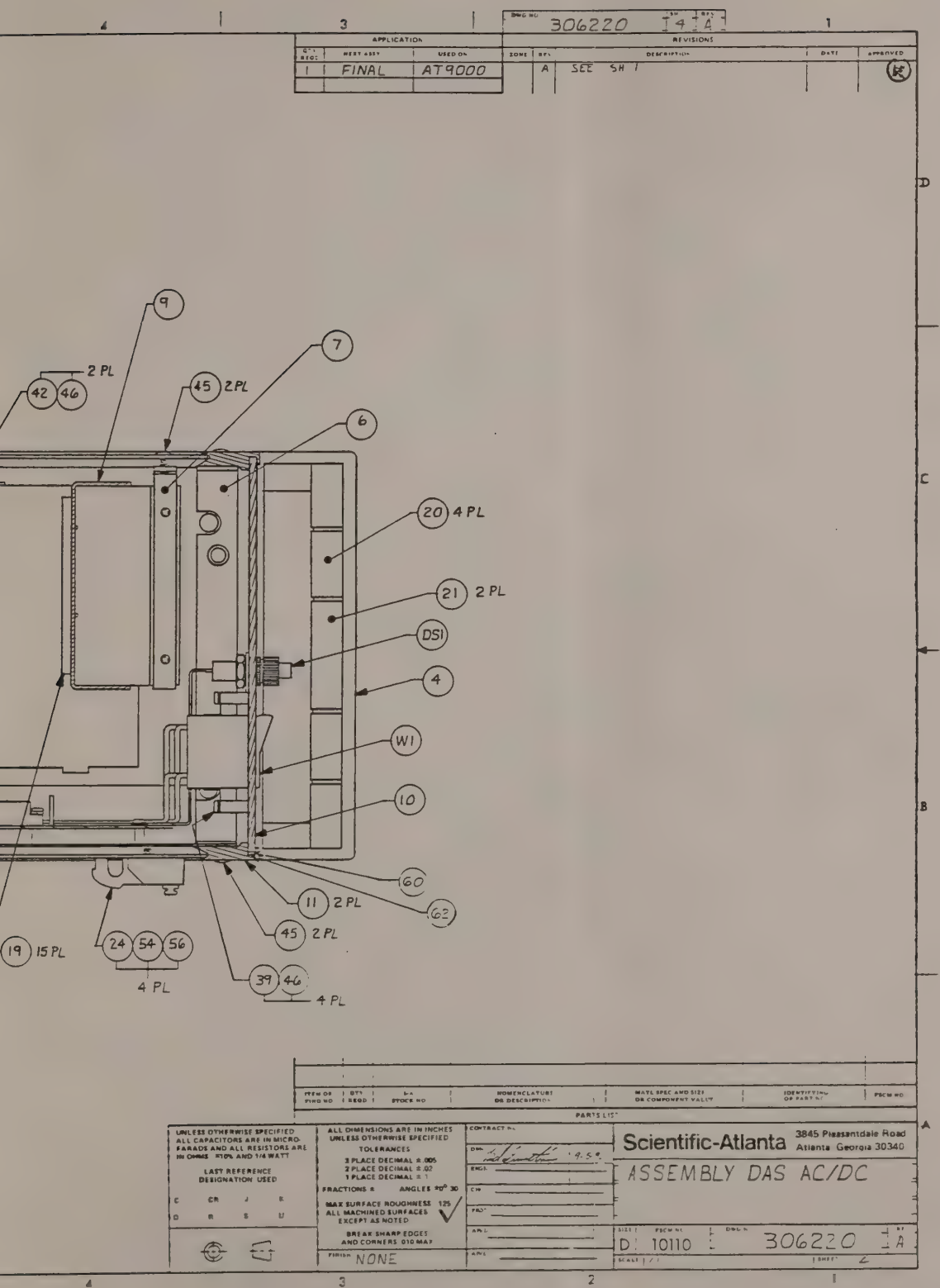
306220
4
A
APPLICATION
NEXT ASSY
USED ON
1
FINAL
AT9000
REVISIONS
ZONE
REV
DESCRIPTION
DATE
APPROVED
A
SEE SH 1
9
7
6
2 PL
42
46
45
2 PL
20
4 PL
21
2 PL
DS1
4
W1
10
60
62
11
2 PL
45
2 PL
19
15 PL
24
54
56
4 PL
39
46
4 PL
PARTS LIST
UNLESS OTHERWISE SPECIFIED ALL CAPACITORS ARE IN MICROFARADS AND ALL RESISTORS ARE IN OHMS ±10% AND 1/4 WATT
LAST REFERENCE DESIGNATION USED
ALL DIMENSIONS ARE IN INCHES UNLESS OTHERWISE SPECIFIED
TOLERANCES
3 PLACE DECIMAL ±.005
2 PLACE DECIMAL ±.02
1 PLACE DECIMAL ±.1
FRACTIONS ± ANGLES ±0° 30
MAX SURFACE ROUGHNESS 125
ALL MACHINED SURFACES EXCEPT AS NOTED
BREAK SHARP EDGES AND CORNERS .010 MAX
FINISH NONE
Scientific-Atlanta
3845 Pleasantdale Road
Atlanta Georgia 30340
ASSEMBLY DAS AC/DC
D
10110
306220
A

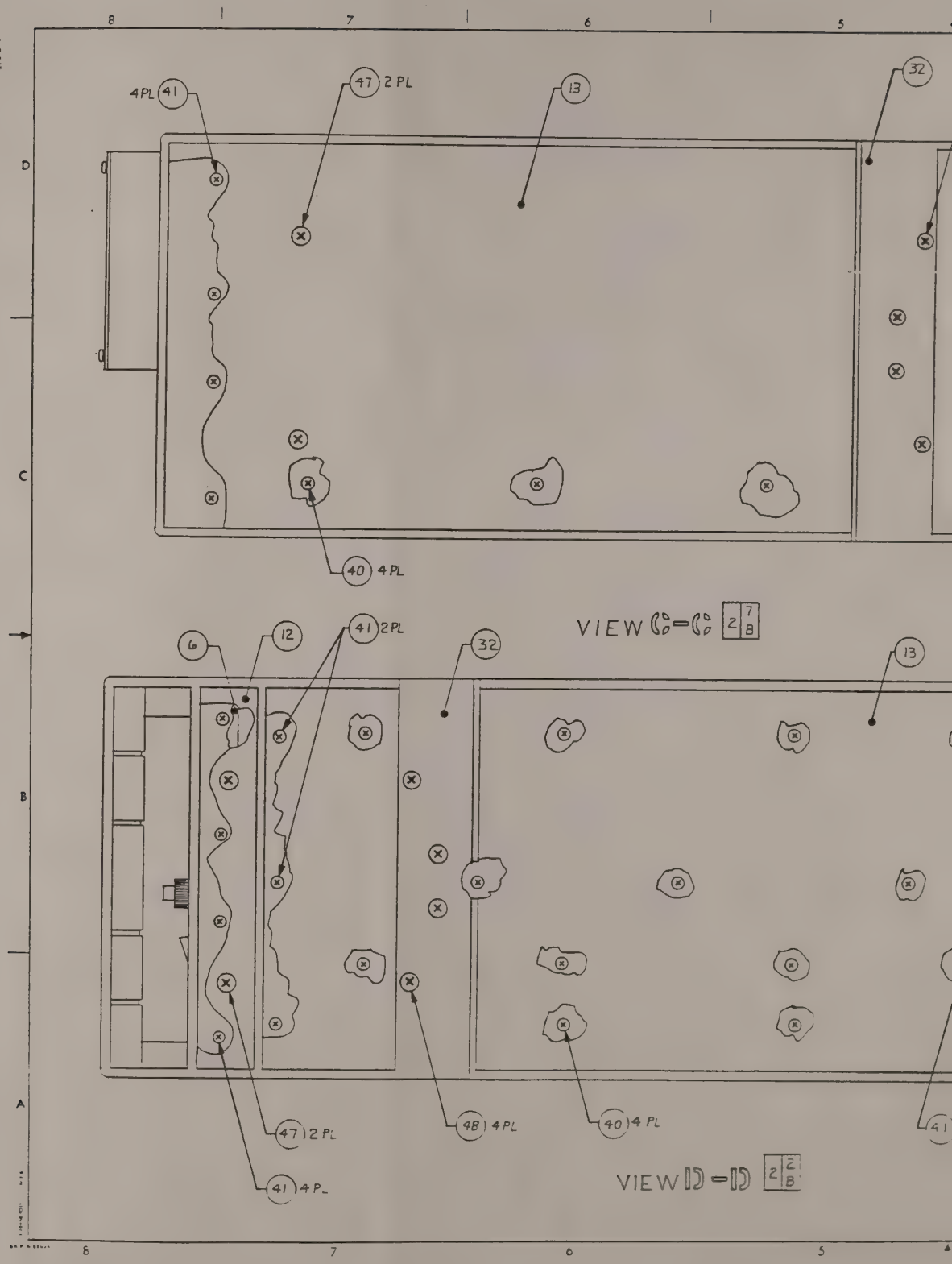
8
7
6
5
D
C
B
A
4PL 41
47 2 PL
13
32
40 4PL
VIEW C-C 2 7 8
6
12
41 2PL
32
13
47 2 PL
48 4PL
40 4 PL
41 4 PL
41
VIEW D-D 2 2 8

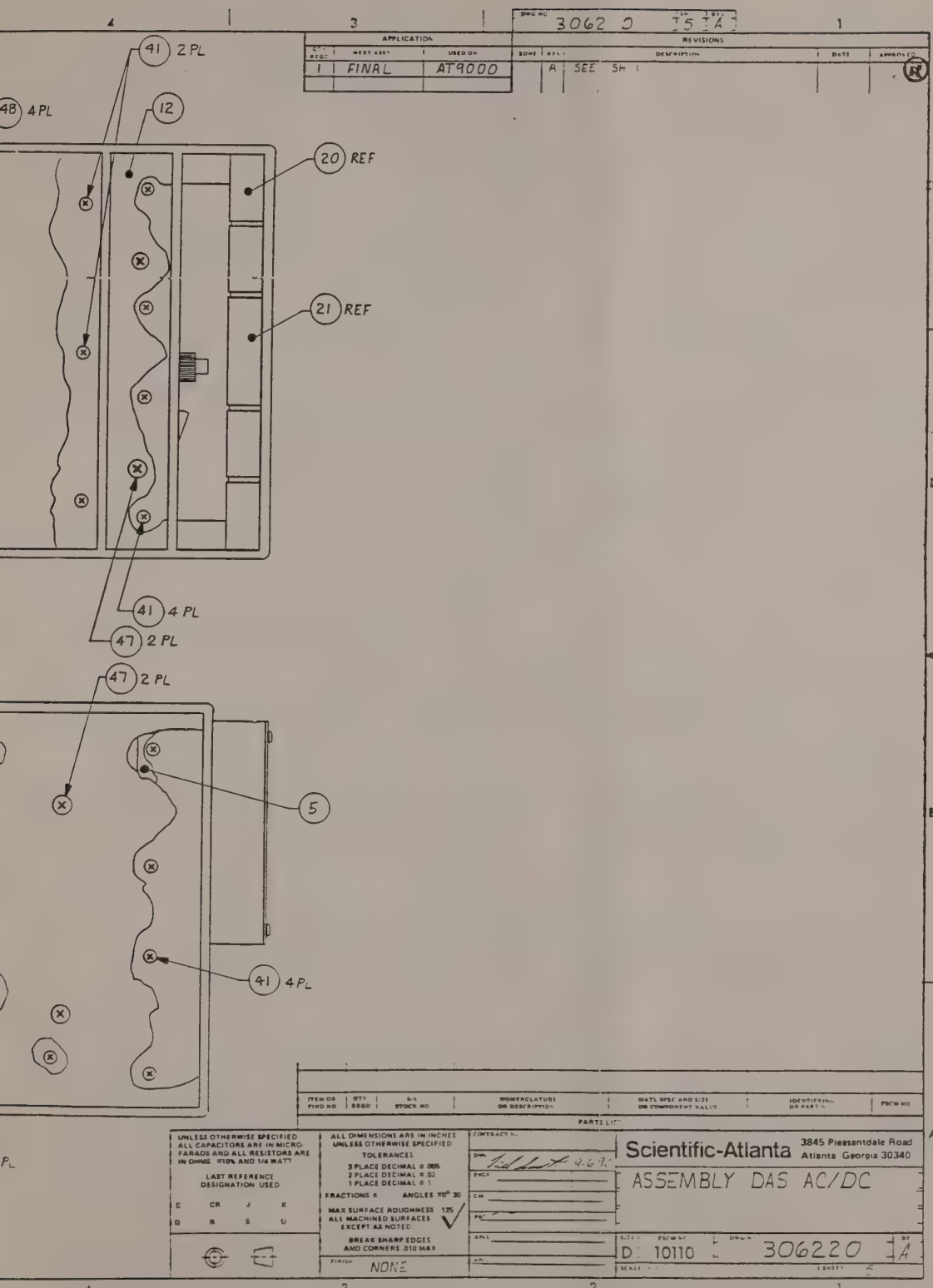

3062 0
APPLICATION
REVISIONS
1 FINAL AT9000
A SEE SH 1
41 2 PL
48 4 PL
12
20 REF
21 REF
41 4 PL
47 2 PL
47 2 PL
5
41 4 PL
PARTS LIST
UNLESS OTHERWISE SPECIFIED ALL CAPACITORS ARE IN MICROFARADS AND ALL RESISTORS ARE IN OHMS ±10% AND 1/4 WATT
LAST REFERENCE DESIGNATION USED
ALL DIMENSIONS ARE IN INCHES UNLESS OTHERWISE SPECIFIED
TOLERANCES
3 PLACE DECIMAL ± .005
2 PLACE DECIMAL ± .02
1 PLACE DECIMAL ± .1
FRACTIONS ± ANGLES ±0° 30
MAX SURFACE ROUGHNESS 125
ALL MACHINED SURFACES EXCEPT AS NOTED
BREAK SHARP EDGES AND CORNERS .010 MAX
FINISH NONE
Scientific-Atlanta
3845 Pleasantdale Road
Atlanta Georgia 30340
ASSEMBLY DAS AC/DC
D 10110
306220

NOTES:

1. AT ASSEMBLY OF FAN PLACE ITEM 30 BETWEEN ITEM B1 AND ITEM 17 WITH THE OFFSET MOUNTING FLANGES FACING ITEM B1.
2. USE (2) WASHERS PROVIDED WITH JACKSOCKET KIT TO ENSURE JACKSOCKETS ARE FLUSH WITH THE CONNECTOR FACE.
3. USE 1 WASHER PROVIDED WITH JACKSOCKET KIT TO ENSURE JACKSOCKETS ARE FLUSH WITH THE CONNECTOR FACE.
4. REMOVE PROTECTIVE COVERING FROM SWITCHES BEFORE INSTALLING MOTHER BOARD INTO THE CHASSIS.
5. BEFORE INSTALLING THE MOTHER BOARD INSTALL ITEMS 16 & 25.
6. INSTALL ITEM 25 IN 2 POSITIONS AS SHOWN TEST DEPT. WILL INSTALL THIRD SECTION AS REQUIRED.

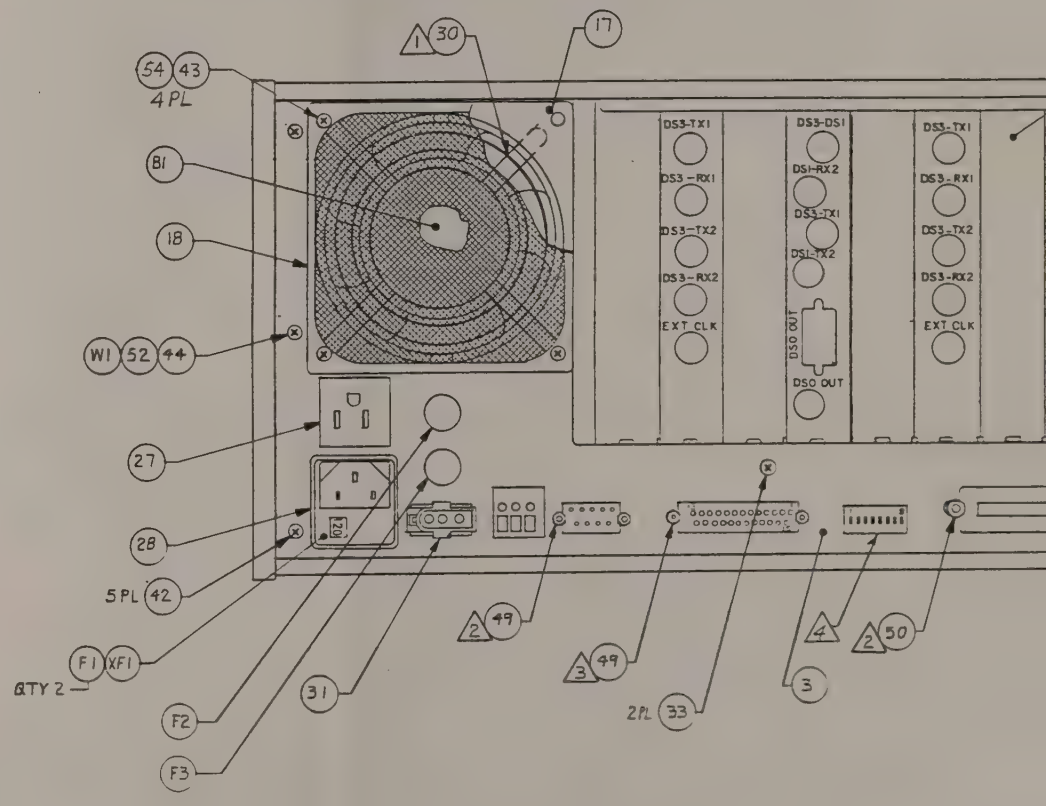

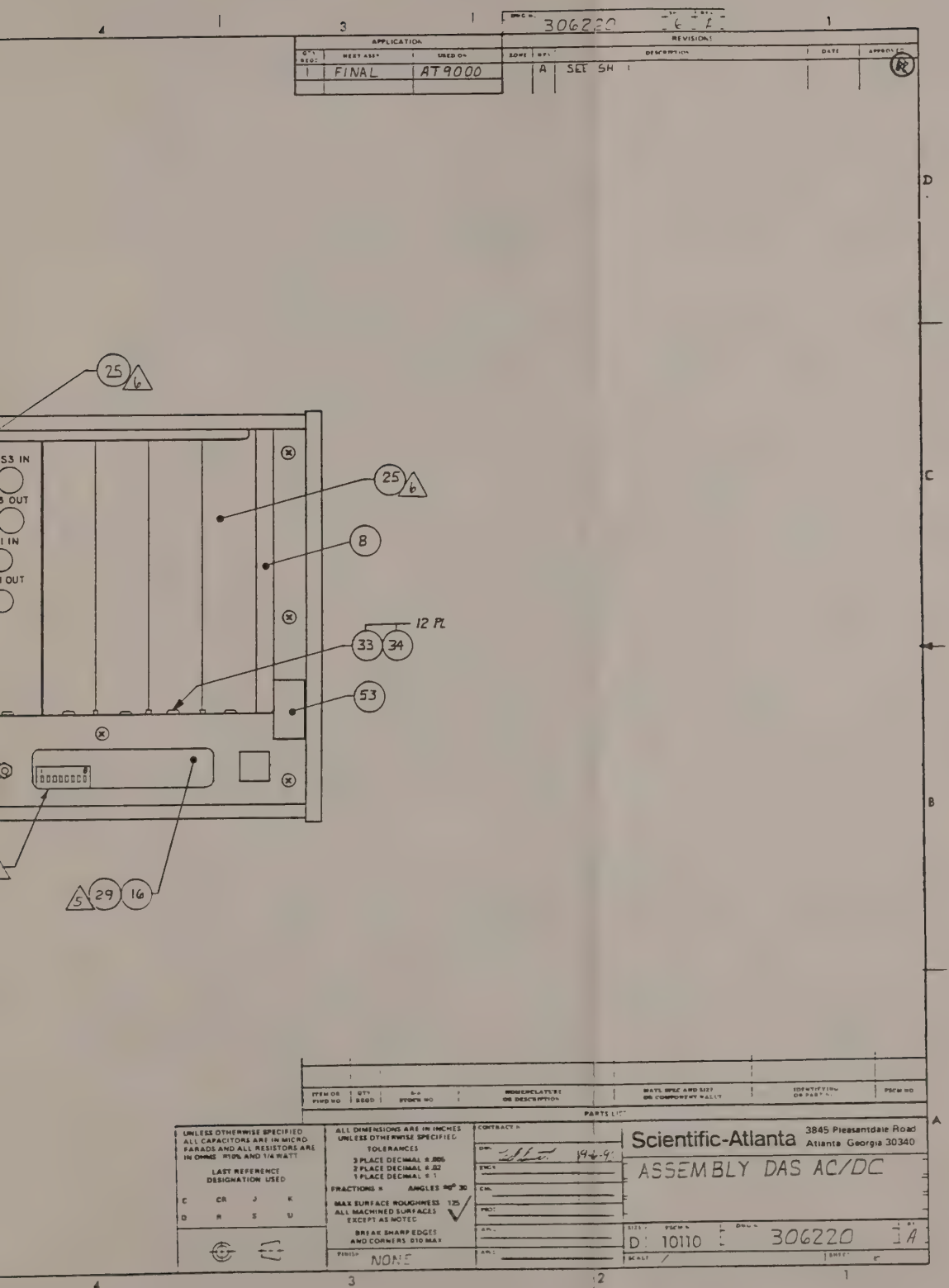
306220
APPLICATION
NEXT ASSY
USED ON
1
FINAL
AT9000
REVISIONS
ZONE
REV
DESCRIPTION
DATE
APPROVED
A
SEE SH 1
25
6
S3 IN
3 OUT
1 IN
1 OUT
8
12 PL
33
34
53
5
29
16
PARTS LIST
UNLESS OTHERWISE SPECIFIED ALL CAPACITORS ARE IN MICRO FARADS AND ALL RESISTORS ARE IN OHMS ±10% AND 1/4 WATT
LAST REFERENCE DESIGNATION USED
ALL DIMENSIONS ARE IN INCHES UNLESS OTHERWISE SPECIFIED
TOLERANCES
3 PLACE DECIMAL ±.005
2 PLACE DECIMAL ±.02
1 PLACE DECIMAL ±.1
FRACTIONS ± ANGLES ±0° 30
MAX SURFACE ROUGHNESS 125
ALL MACHINED SURFACES EXCEPT AS NOTED
BREAK SHARP EDGES AND CORNERS .010 MAX
FINISH NONE
CONTRACT
Scientific-Atlanta
3845 Pleasantdale Road
Atlanta Georgia 30340
ASSEMBLY DAS AC/DC
D
10110
306220
A

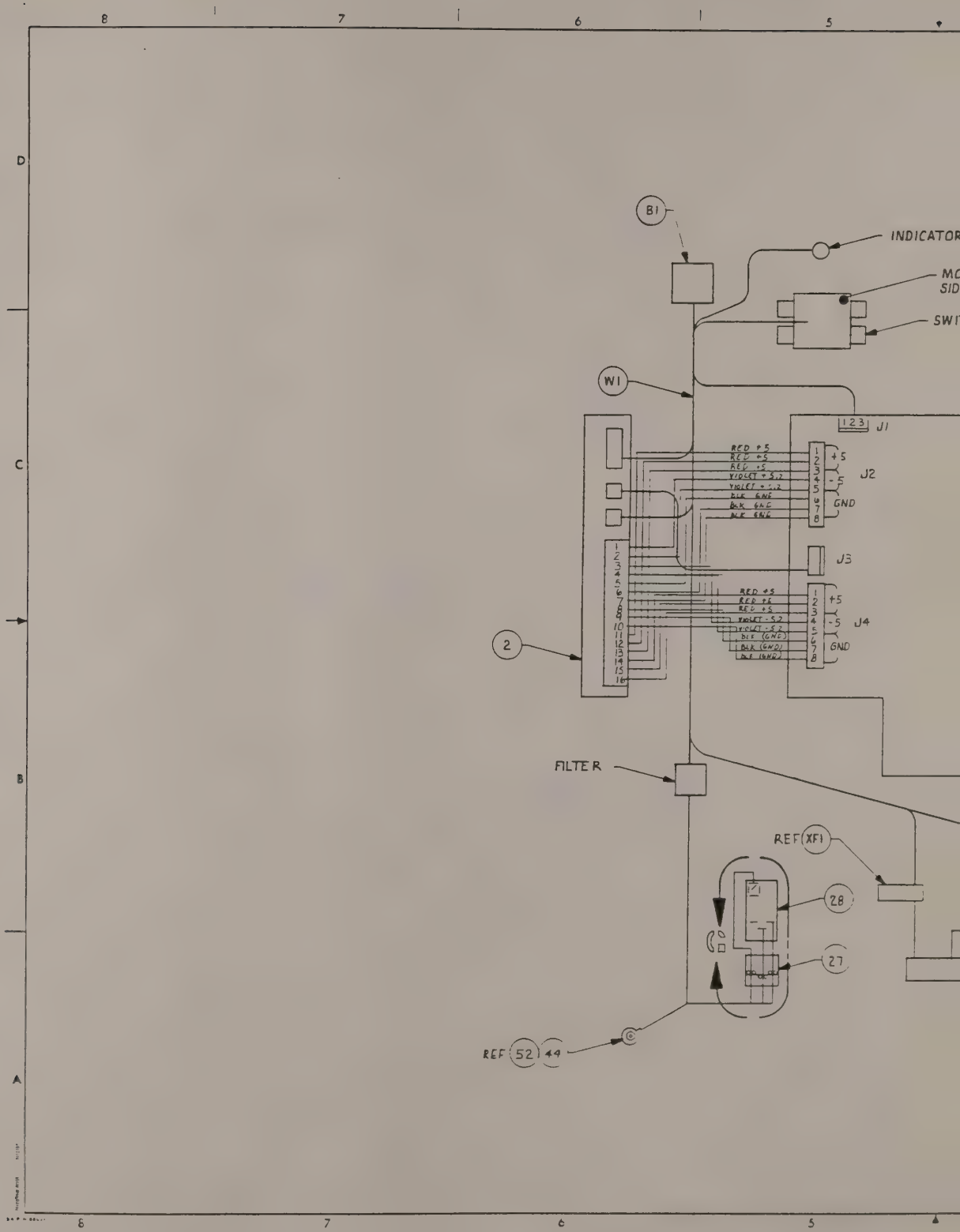
B1
INDICATOR
W1
J1
J2
J3
J4
+5
-5
GND
2
FILTER
REF XF1
28
27
REF 52 44

306220 7 A

APPLICATION		REVISIONS			
NEXT ASSY USED ON		ZONE	DESCRIPTION	DATE	APPROVED
1 FINAL	AT9000		A ISEE SH 1		

IGHT

ON PANEL WITH THIS
IP

1

XF2 REF

52 44 REF

3 P3 REF

ITEM OR FIND NO	QTY REQD	B-O STOCK NO	NOMENCLATURE OR DESCRIPTION	MATL SPEC AND SIZE OR COMPONENT VALUE	IDENT SYM OR PART NO	FSCM NO

PARTS LIST

UNLESS OTHERWISE SPECIFIED
ALL CAPACITORS ARE IN MICRO-FARADS AND ALL RESISTORS ARE IN OHMS ±10% AND 1/4 WATT

LAST REFERENCE DESIGNATION USED

C	CR	J	R
O	R	S	U

ALL DIMENSIONS ARE IN INCHES
UNLESS OTHERWISE SPECIFIED
TOLERANCES
3 PLACE DECIMAL ± .005
2 PLACE DECIMAL ± .02
1 PLACE DECIMAL ± .1
FRACTIONS ± ANGLES 90° 30'
MAX SURFACE ROUGHNESS 125
ALL MACHINED SURFACES EXCEPT AS NOTED
BREAK SHARP EDGES AND CORNERS .010 MAX
FINISH NONE

CONTRACT
DES 19-7-90
ENG
CH
PE
APP
APP

Scientific-Atlanta 3845 Pleasantdale Road Atlanta Georgia 30340

ASSEMBLY DAS AC/DC

SIZE D | FSCM NO 10110 | DRAWING NO 306220 | REV A
SCALE NONE | SHEET

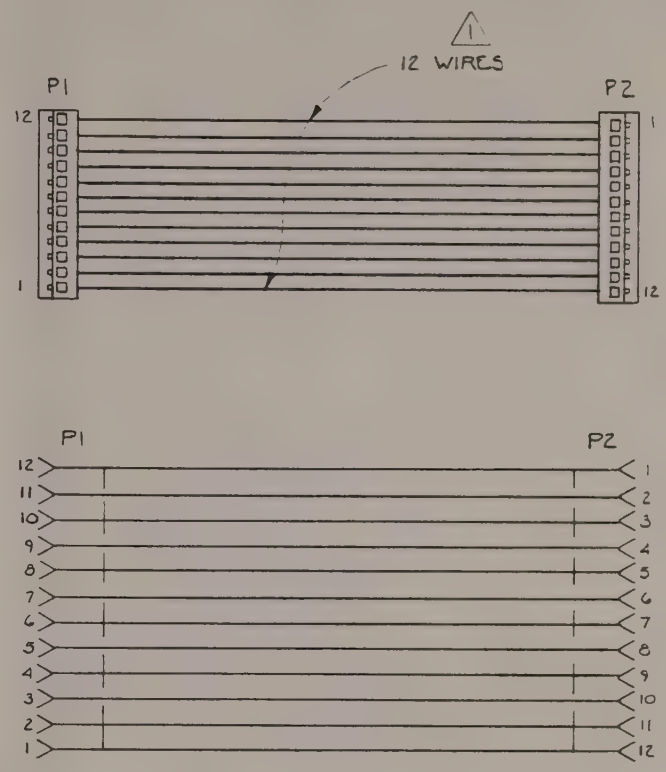

NOTES:

1. A) CUT WIRES TO 7.0 LG , 12 PLACES
   B) INSERT WIRES IN P1 , ENSURE WIRE ENDS ARE FLUSH AGAINST CONNECTOR CAP STOP
   C) PRESS CAP INTO CONNECTOR
   D) REPEAT P1 PROCESS FOR P2
   E) FORM CABLE AS SHOWN.

APPLICATION			REVISIONS				
QTY REQD	NEXT ASSY	USED ON	ZONE	REV	DESCRIPTION	DATE	APPROVED
1	327960	AT 9500		-	INITIAL RELEASE		
1	327965	AT 9500					

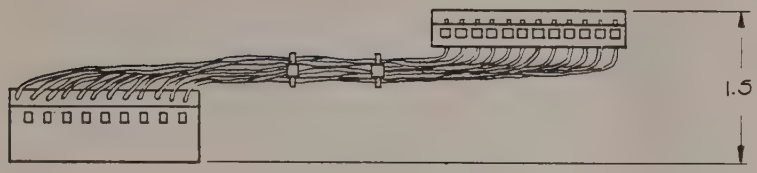

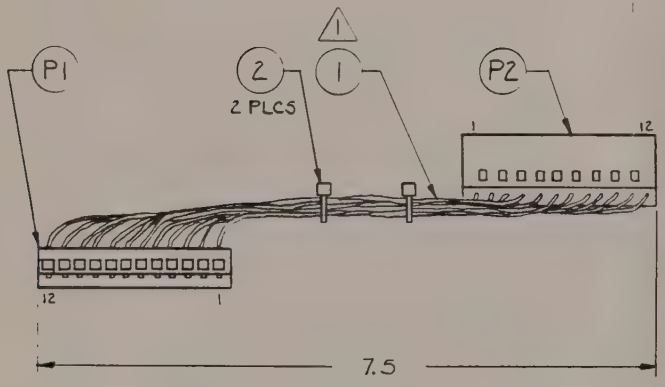

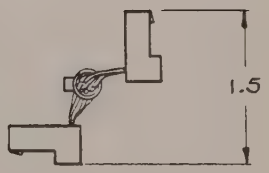

ITEM OR FIND NO.	QTY REQD	S-A STOCK NO.	NOMENCLATURE OR DESCRIPTION	MATL SPEC AND SIZE OR COMPONENT VALUE	IDENTIFYING OR PART NO	FSCM NO
P2	1	177096	CONN, WIREMOUNT, SKT	12 NO. 18 AWG CNTCTS	3M CLG-1012-00101D-CGR	
P1	1	177096	CONN, WIREMOUNT, SKT	12 NO. 18 AWG CNTCTS	3M CLG-1012-00101D-CGR	
2	2	73045	CABLE TIE	4 IN. LG. REMOVABLE	PANDUIT SST1M	
1	.6 FT	73356	WIRE, WHITE	NO. 18 AWG STRANDED	MIL-W-16878D	

PARTS LIST

UNLESS OTHERWISE SPECIFIED ALL CAPACITORS ARE IN MICROFARADS AND ALL RESISTORS ARE IN OHMS, ±10% AND 1/4 WATT

LAST REFERENCE DESIGNATION USED

C	CR	J	E
Q	R	S	U

ALL DIMENSIONS ARE IN INCHES

TOLERANCES
3 PLACE DECIMAL ± .005
2 PLACE DECIMAL ± .02
1 PLACE DECIMAL ± .1

FRACTIONS ± ANGLES ± 30

MAX SURFACE ROUGHNESS 125 ALL MACHINED SURFACES EXCEPT AS NOTED

BREAK SHARP EDGES AND CORNERS .010 MAX

FINISH NONE

CONTRACT NO

DWN	INTECO	10/84
ENGR		
CHK		10/16/84
PROD		10/16/84
APVD		
APVD		

Scientific-Atlanta 3845 Pleasantdale Road Atlanta, Georgia 30340

CABLE ASSY - POWER DTA

SIZE	FSCM NO	DWG NO	REV
C	10110	327953	-

SCALE NONE SHEET

DWG NO 327953 REV

NOTES:

1. CUT 2 PIECES OF ITEM 8 (EPAND-O-BLACK) 4.75 WITH HOT KNIFE.
2. NOTE SWITCH ORIENTATION.
3. PREP WIRES AS SHOWN AND ADD INTO HARNESS.
4. ALL DIMENSIONS $^{+.25}_{-.15}$
5. HEAT SHRINK ITEMS 9 AND 10 TO COMPLETELY COVER FUSE HOLDER XF1, XF2 BEHIND MOUNTING NUT AND EXTEND BEYOND END OF BODY APPROXIMATELY .25.

APPLICATION			REVISIONS				
QTY REQD	NEXT ASSY	USED ON	ZONE	REV	DESCRIPTION	DATE	APPR
1	306220	AT9000					

ITEM OR FIND NO	QTY REQD	S.A. STOCK NO	NOMENCLATURE OR DESCRIPTION	MATL SPEC AND SIZE OR COMPONENT VALUE	IDENTIFYING OR PART NO	FSCM NO
XF1	1	174637	FUSE HOLDER		345913	L
XF1	1	174637	FUSE HOLDER		345913	L
XD1	1	89379	LAMP, LED HOLDER		508-7538-504	D1
S1	1	177354	SWITCH, ROCKER	4 PST	T11K50-1L-BL-G	CAR
P3	1	177299	CONN, RECT		1-350347-0	AMP
P2	1	177038	CONN, BODY	3 HOLE	MOL 22-01-2037	MOL
P1	1	177096	CONN, FL CBL	12 COND.	CLG-1012-00101D-CGR	MMM
FL1	1	177350	FILTER, AC LINE	10 A 115/250 VAC	A10GEN1C13	A
21	2.2	73354	WIRE, STRANDED	18 AWG VIOLET	MIL-W-16878 D	THM
20	2.2	73356	WIRE, STRANDED	18 AWG WHITE	MIL-W-16878 D	THM
19	3.0	73339	WIRE, STRANDED	16 AWG VIOLET	MIL-W-16878 D	THM
18	3.0	73341	WIRE, STRANDED	16 AWG WHITE	MIL-W-16878 D	THM
17	1.3	73337	WIRE, STRANDED	16 AWG GREEN	MIL-W-16878 D	THM
16	2.50	73347	WIRE, STRANDED	16 AWG WH/GRAY	MIL-W-16878 D	THM
15	2.50	73340	WIRE, STRANDED	16 AWG GRAY	MIL-W-16878 D	THM
14	2.20	73365	WIRE, STRANDED	18 AWG WH/GRAY	MIL-W-16878 D	THM
13	2.20	73355	WIRE, STRANDED	18 AWG GRAY	MIL-W-16878 D	THM
12	1.25	73389	WIRE, STRANDED	22 AWG YELLOW	MIL-W-16878 D	THM
11	1.25	73387	WIRE, STRANDED	22 AWG RED	MIL-W-16878 D	THM
10	.5	75930	TUBING, HEAT SHRINK		FIT-221-1/2	AW
9	.2	77936	TUBING, HEAT SHRINK		FIT-221-3/16	AW
8	1	328120	TUBING, POLYSTER EXPAND	1.25 DIA BLK	EXP-1 1/4-PT-BK	BENTLY HARRIS
7	.8	77938	TUBING, HEAT SHRINK		FIT-221-3/8	AW
6	14	73045	CABLE, TIE	4.0 IN.	SST1M	PAN
5	2	73013	TERMINAL, INT TOOTH	NO. 6	1416-6	SH
4	3	177352	TERM, QUIK DISCONNECT		DNF14-187	PAN
3	3	177302	CONN, CONTACT	14 - 20 AWG	350389-2	AMP
2	2	177039	CONN, CONTACT	22 - 30 AWG	MOL 08-55-0102	MOL
1	4	177355	CONN, WIRE		BSN18	PAN

PARTS LIST

UNLESS OTHERWISE SPECIFIED ALL CAPACITORS ARE IN MICROFARADS AND ALL RESISTORS ARE IN OHMS ±10% AND 1/4 WATT

LAST REFERENCE DESIGNATION USED

C CR J R

Q R S U

ALL DIMENSIONS ARE IN INCHES UNLESS OTHERWISE SPECIFIED

TOLERANCES
3 PLACE DECIMAL ± .005
2 PLACE DECIMAL ± .02
1 PLACE DECIMAL ± .1
FRACTIONS ± ANGLES ±0° 30'

MAX SURFACE ROUGHNESS 125
ALL MACHINED SURFACES EXCEPT AS NOTED

BREAK SHARP EDGES AND CORNERS .010 MAX

FINISH NONE

CONTRACT NO

DWN 8-13-90

ENGR 7-27-9

CHK

PR 10-16

APVD

APVD

Scientific-Atlanta 3845 Pleasantdale Road Atlanta Georgia 30340

ASSY, POWER HARNESS AC/DC

SIZE F FSCM NO 10110 DWG NO 306206

SCALE NONE SHEET 1 OF 2

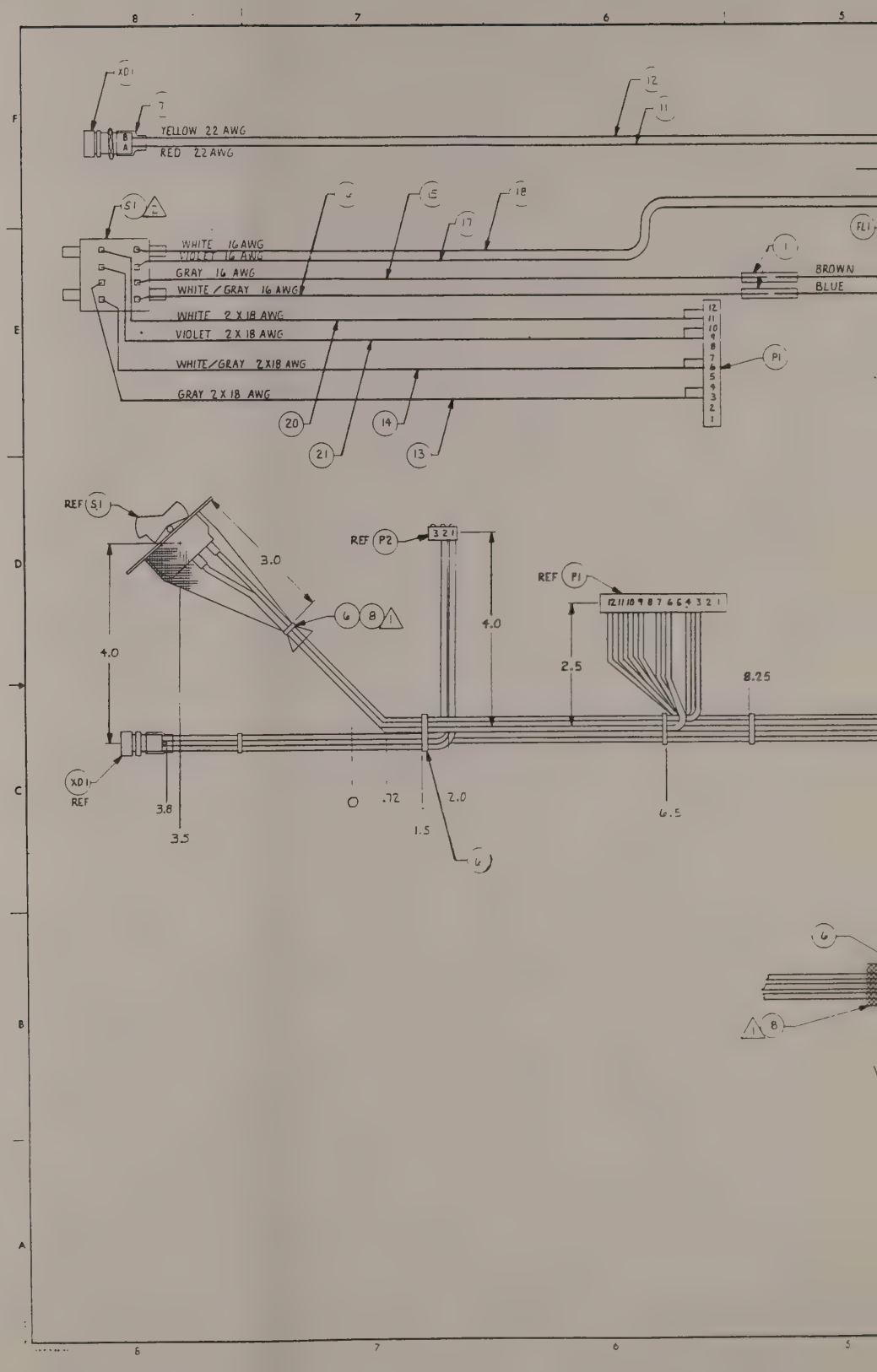
XD1
7
YELLOW 22 AWG
RED 22 AWG
12
11
S1
WHITE 16 AWG
VIOLET 16 AWG
GRAY 16 AWG
WHITE / GRAY 16 AWG
WHITE 2 X 18 AWG
VIOLET 2 X 18 AWG
WHITE/GRAY 2 X 18 AWG
GRAY 2 X 18 AWG
20
21
14
13
15
17
18
FL1
BROWN
BLUE
P1
REF S1
REF P2
REF P1
3.0
4.0
4.0
2.5
8.25
6.5
2.0
1.5
.72
3.8
3.5
REF XD1

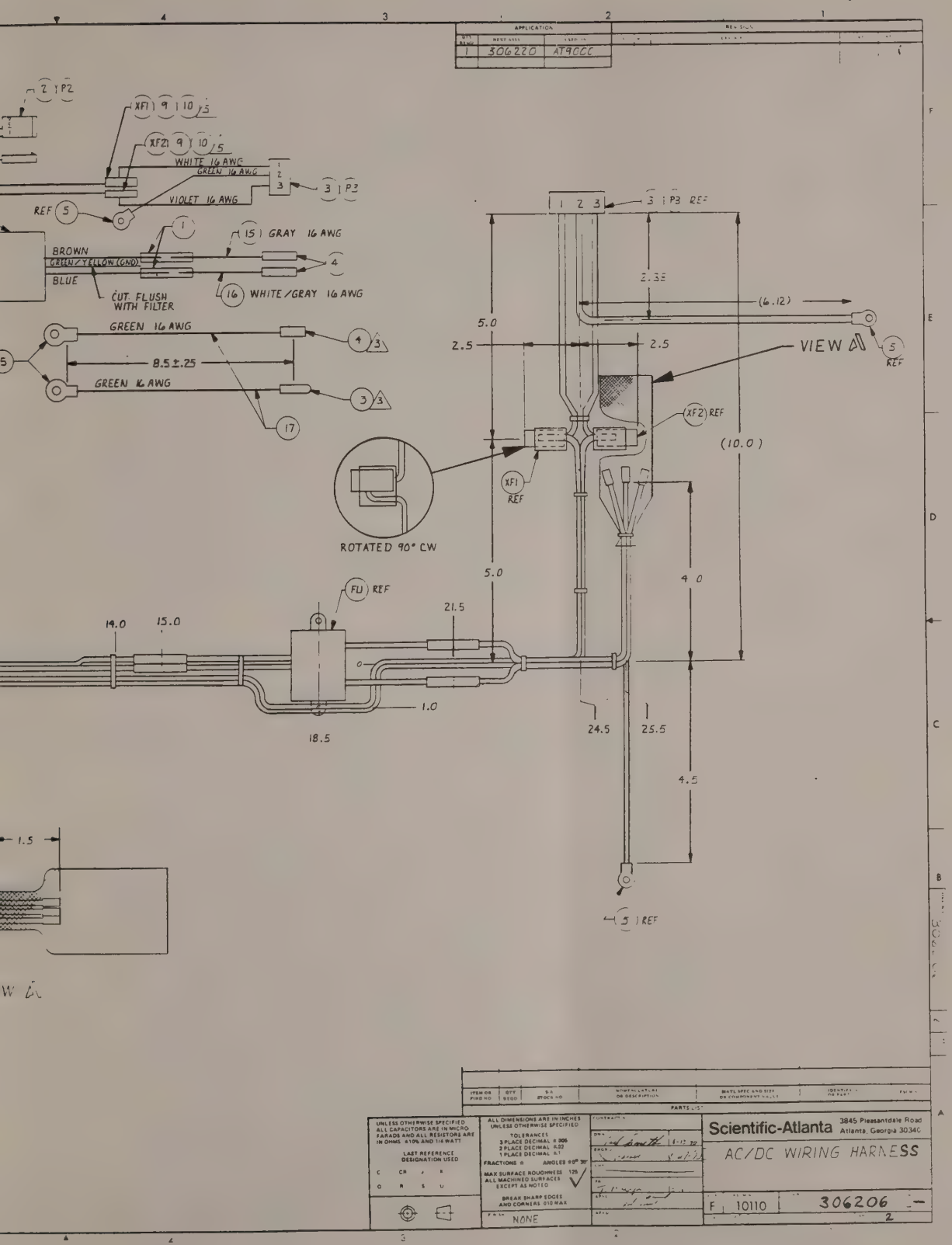
APPLICATION
1 306220 AT9CCC
Z P2
XF1 9 10 5
XF2 9 10 5
WHITE 16 AWG
GREEN 16 AWG
VIOLET 16 AWG
3 P3
REF 5
1
15 GRAY 16 AWG
BROWN
GREEN/YELLOW (GND)
BLUE
4
CUT FLUSH WITH FILTER
16 WHITE/GRAY 16 AWG
GREEN 16 AWG
8.5±.25
GREEN 16 AWG
17
1 2 3
3 P3 REF
2.35
(6.12)
5.0
2.5
2.5
VIEW A
5 REF
XF2 REF
(10.0)
XF1 REF
ROTATED 90° CW
5.0
4.0
FU REF
21.5
14.0
15.0
1.0
18.5
24.5
25.5
4.5
5 REF
1.5
W A
PARTS LIST
UNLESS OTHERWISE SPECIFIED ALL CAPACITORS ARE IN MICRO FARADS AND ALL RESISTORS ARE IN OHMS ±10% AND 1/4 WATT
LAST REFERENCE DESIGNATION USED
C CR J R
Q R S U
ALL DIMENSIONS ARE IN INCHES UNLESS OTHERWISE SPECIFIED
TOLERANCES
3 PLACE DECIMAL ± .005
2 PLACE DECIMAL ± .02
1 PLACE DECIMAL ± 1
FRACTIONS ± ANGLES ±0° 30'
MAX SURFACE ROUGHNESS 125
ALL MACHINED SURFACES EXCEPT AS NOTED
BREAK SHARP EDGES AND CORNERS .010 MAX
FINISH NONE
Scientific-Atlanta 3845 Pleasantdale Road Atlanta, Georgia 30340
AC/DC WIRING HARNESS
F 10110 306206
2

AP 469190

NOTES:

1. INSTALL THE FOLLOWING AFTER WAVE SOLDER:
J7, J8, J9, S1, S2, , TB1, U1, U2, U3, U4, U9, U10, U11, U12, U13, U14, U15, U17, U21, U22, U23, U26.
2. INSTALL ITEM 2 (TERMINALS) ON A TEMPORARY SPEAKER (SP1) TO ALIGN TERMINALS THROUGH WAVESOLDER.

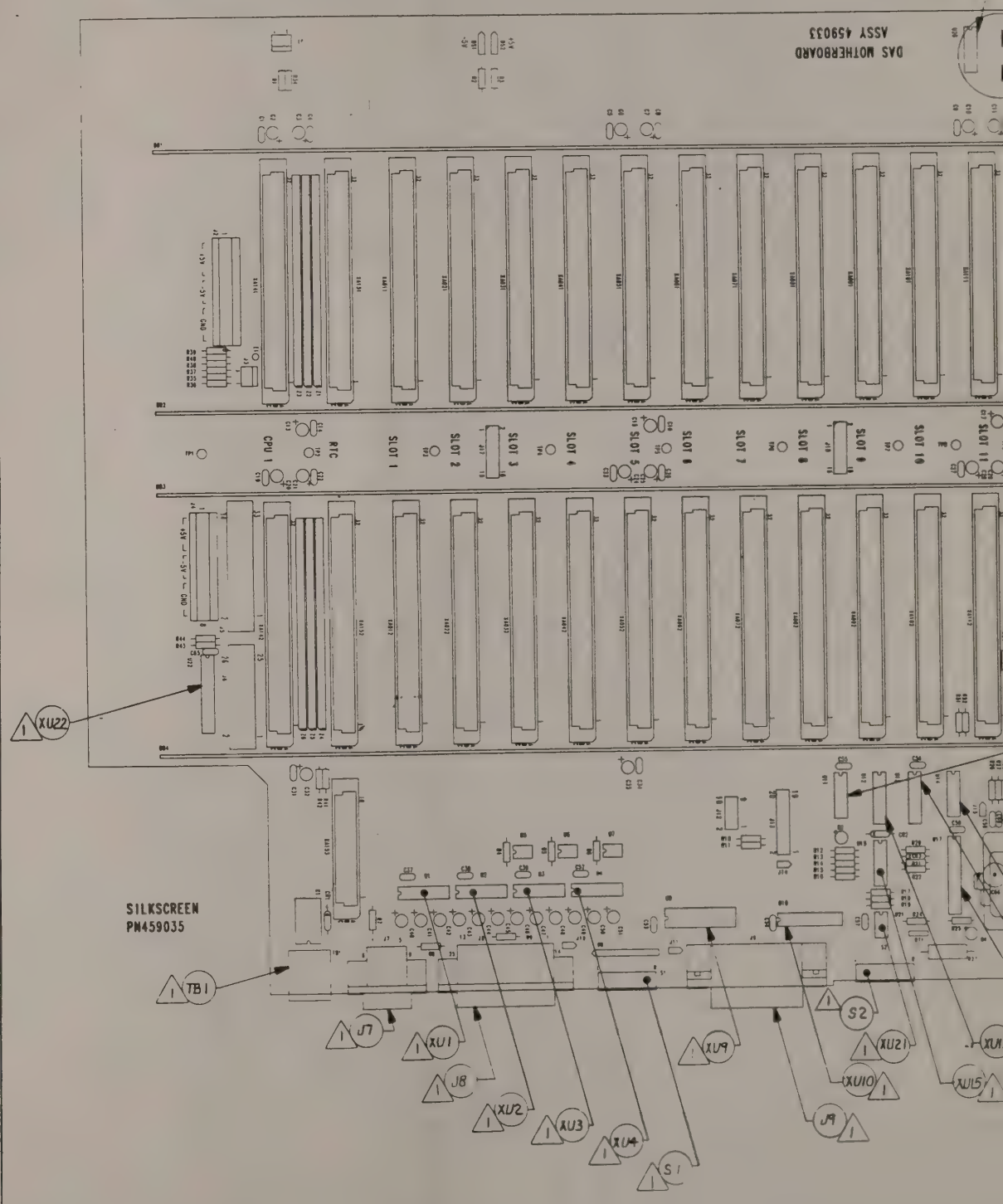

DWG NO 459033 SH 1 REV

APPLICATION		
QTY REQD	NEXT ASSY	USED ON
1	306200	AT9000
1	306220	AT9000
1	456990	AT9000

REVISIONS

ZONE	REV		DATE	APPROVED

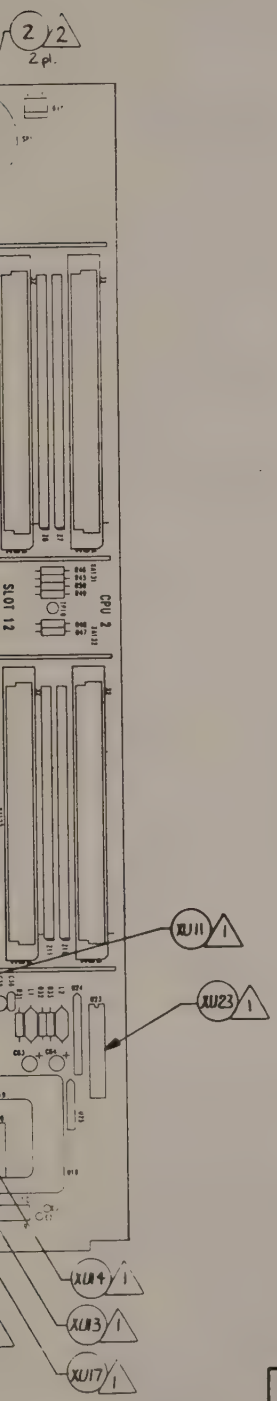

	ECO NO.	ECO NO.	ECO NO.	ECO NO.	ECO NO.
TOP ASSY 459033					
PWB 459035					
U22 - 306194 U22 24EA					
U23 - 306196 U23 74DC					

SEE SEPARATE PARTS LIST

ITEM OR FIND NO	QTY REQD	S-A STOCK NO	NOMENCLATURE OR DESCRIPTION	MATL SPEC AND SIZE OR COMPONENT VALUE	IDENTIFYING OR PART NO	FSCM NO

PARTS LIST

UNLESS OTHERWISE SPECIFIED ALL CAPACITORS ARE IN MICROFARADS AND ALL RESISTORS ARE IN OHMS, ±10% AND 1/4 WATT

LAST REFERENCE DESIGNATION USED

C CR J K
Q R S U

ALL DIMENSIONS ARE IN INCHES UNLESS OTHERWISE SPECIFIED

TOLERANCES
3 PLACE DECIMAL ±.005
2 PLACE DECIMAL ±.02
1 PLACE DECIMAL ±.1
FRACTIONS ± ANGLES ±0° 30'

MAX SURFACE ROUGHNESS 125
ALL MACHINED SURFACES EXCEPT AS NOTED

BREAK SHARP EDGES AND CORNERS .010 MAX

FINISH NONE

CONTRACT NO

DFN	[signature]	3-6-90
ENGR	[signature]	3/14/90
CHK	Janice Coker	3-15-90
PROD	[signature]	3/15/90
APVD	[signature]	
APVD		

Scientific-Atlanta
P O Box 105027
Atlanta Georgia 30348

DAS MOTHERBOARD ASSY

SIZE	FSCM NO	DWG NO	REV
D	10110	459033	

SCALE SHEET

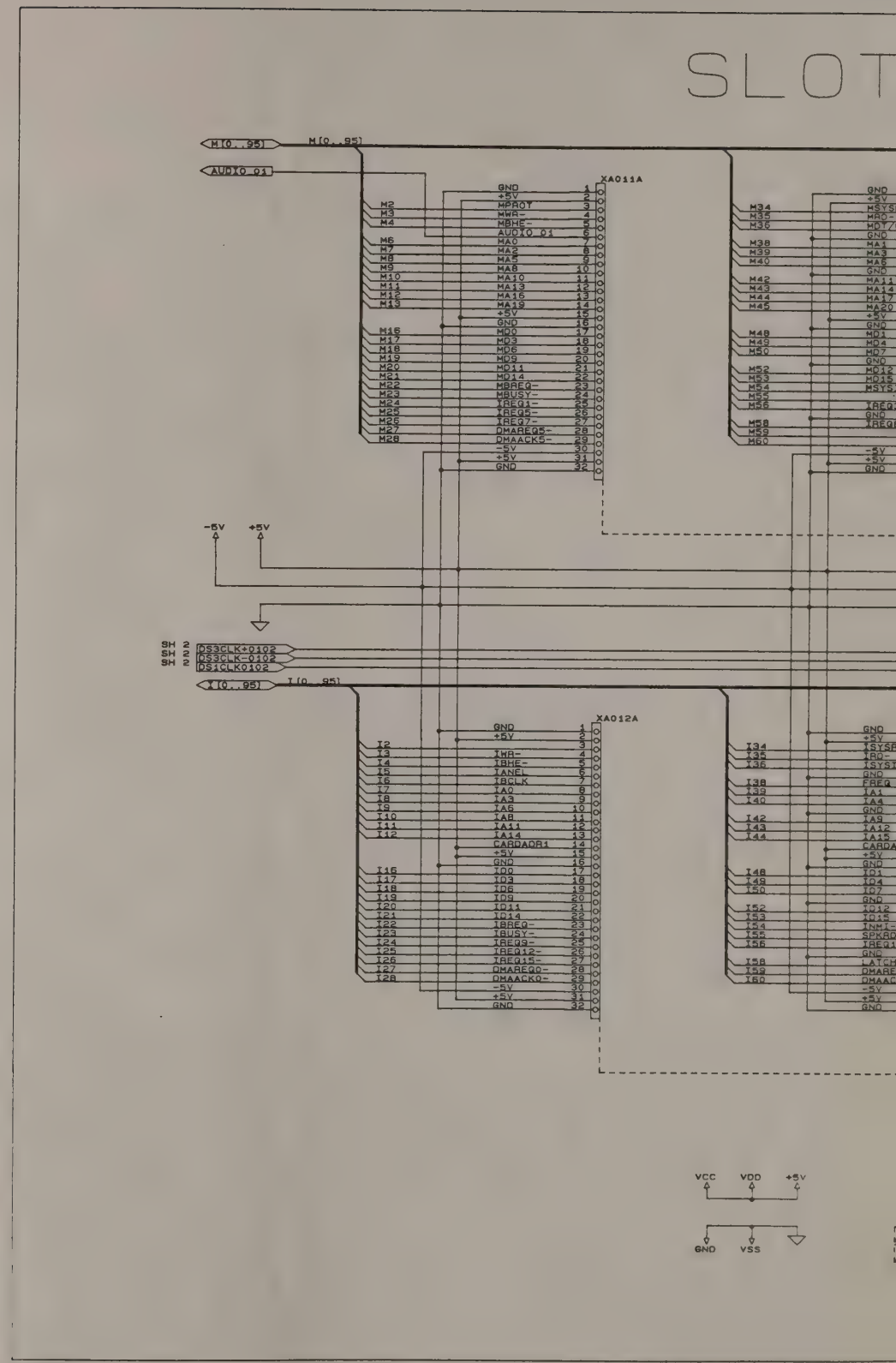
SLOT
M[0..95]
AUDIO_01
XA011A
GND
+5V
MPROT
MWR-
MBHE-
AUDIO_01
MA0
MA2
MA5
MA8
MA10
MA13
MA16
MA19
MD0
MD3
MD6
MD9
MD11
MD14
MBREQ-
MBUSY-
IREQ1-
IREQ5-
IREQ7-
DMAREQ5-
DMAACK5-
-5V
MSYS
MA0-
MD7
MA1
MA3
MA6
MA11
MA14
MA17
MA20
MD1
MD4
MD7
MD12
MD15
MSYS
IREQ
-5V
+5V
GND
-5V
+5V
DS3CLK+0102
DS3CLK-0102
DS1CLK0102
I[0..95]
XA012A
IWR-
IBHE-
IANEL
IBCLK
IA0
IA3
IA6
IA8
IA11
IA14
CARDADR1
ID0
ID3
ID6
ID9
ID11
ID14
IBREQ-
IBUSY-
IREQ9-
IREQ12-
IREQ15-
DMAREQ0-
DMAACK0-
ISYSR
IRQ-
ISYST
FREQ
IA1
IA4
IA9
IA12
IA15
CARDA
ID1
ID4
ID7
ID12
ID15
INMI-
SPKRD
IREQ1
LATCH
DMARE
DMAAC
VCC
VDD
+5V
GND
VSS

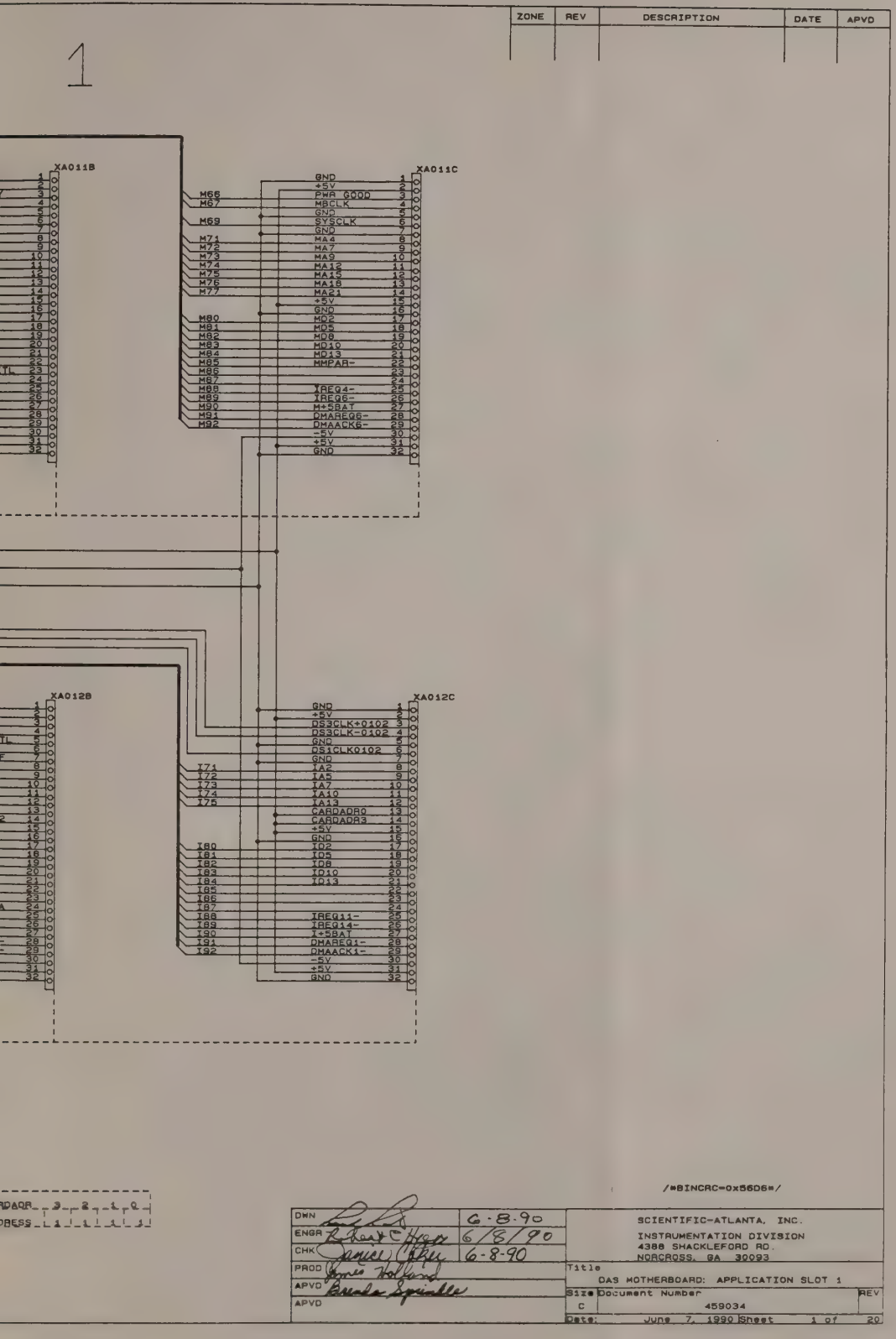
ZONE
REV
DESCRIPTION
DATE
APVD
1
XA011B
XA011C
GND
+5V
PWR GOOD
MBCLK
GND
SYSCLK
GND
MA4
MA7
MA9
MA12
MA15
MA18
MA21
+5V
GND
MD2
MD5
MD8
MD10
MD13
MMPAR-
IREQ4-
IREQ6-
M+5BAT
DMAREQ6-
DMAACK6-
-5V
+5V
GND
XA012B
XA012C
DS3CLK+0102
DS3CLK-0102
DS3CLK0102
IA2
IA5
IA7
IA10
IA13
CARDADR0
CARDADR3
ID2
ID5
ID8
ID10
ID13
IREQ11-
IREQ14-
I+5BAT
DMAREQ1-
DMAACK1-
/*BINCRC=0x56D6*/
DWN
ENGR
CHK
PROD
APVD
APVD
6-8-90
6/8/90
6-8-90
SCIENTIFIC-ATLANTA, INC.
INSTRUMENTATION DIVISION
4388 SHACKLEFORD RD.
NORCROSS, GA 30093
Title
DAS MOTHERBOARD: APPLICATION SLOT 1
Size
Document Number
REV
C
459034
Date: June 7, 1990 Sheet 1 of 20

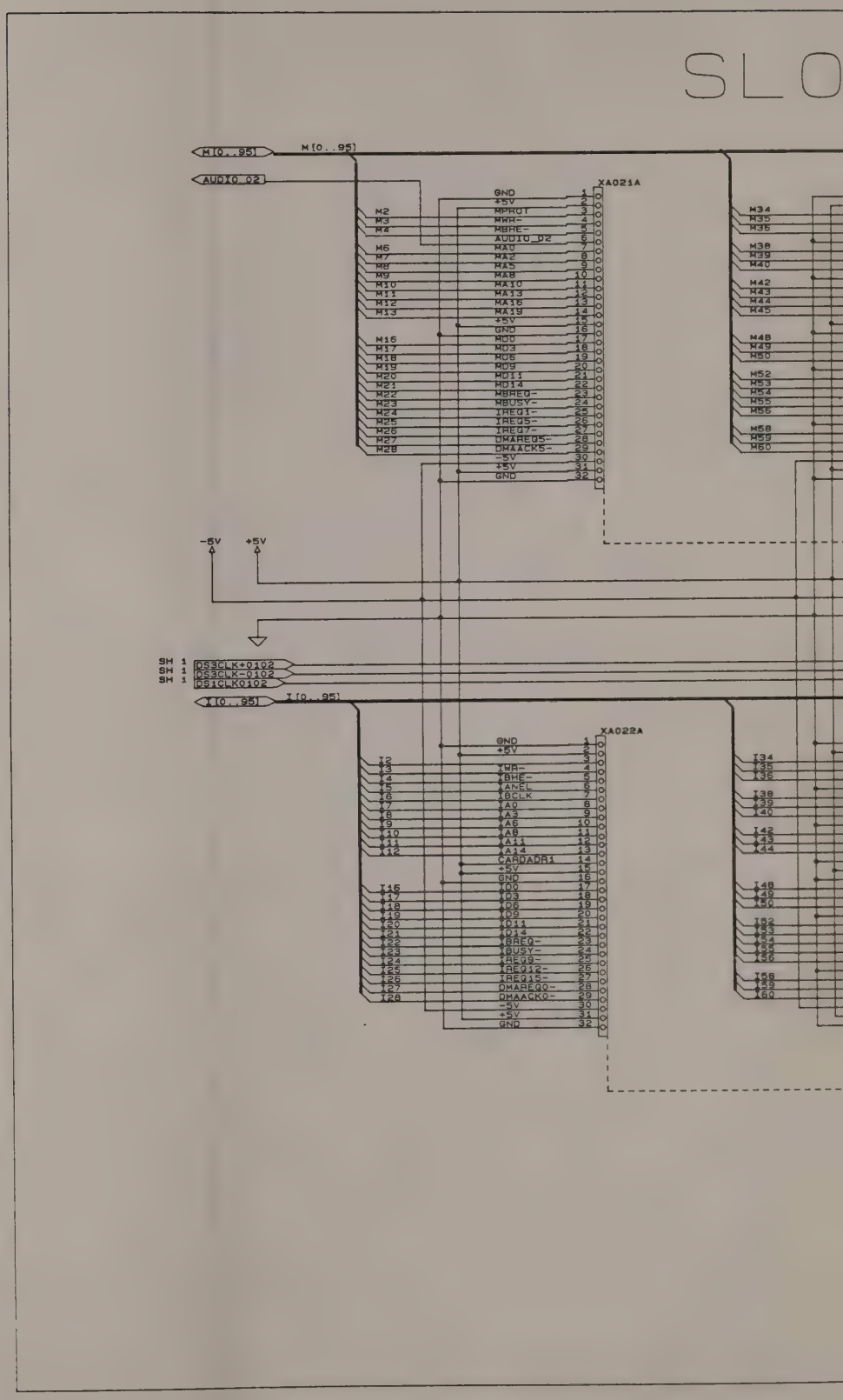
SLO
M[0..95]
AUDIO_02
XA021A
GND
+5V
MPROT
MWR-
MBHE-
AUDIO_02
MA0
MA2
MA5
MA8
MA10
MA13
MA16
MA19
+5V
GND
MD0
MD3
MD6
MD9
MD11
MD14
MBREQ-
MBUSY-
IREQ1-
IREQ5-
IREQ7-
DMAREQ5-
DMAACK5-
-5V
+5V
GND
-5V
+5V
SH 1
DS3CLK+0102
DS3CLK-0102
DS1CLK0102
I[0..95]
XA022A
GND
+5V
IWR-
IBHE-
IANEL
IBCLK
IA0
IA3
IA6
IA8
IA11
IA14
CARDADR1
+5V
GND
ID0
ID3
ID6
ID9
ID11
ID14
IBREQ-
IBUSY-
IREQ9-
IREQ12-
IREQ15-
DMAREQ0-
DMAACK0-
-5V
+5V
GND

T 2

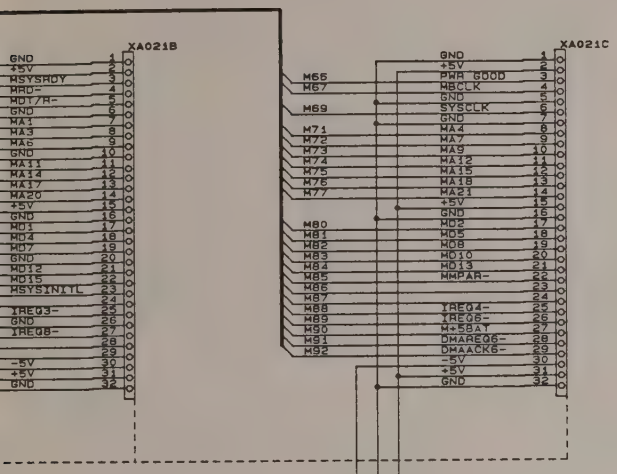

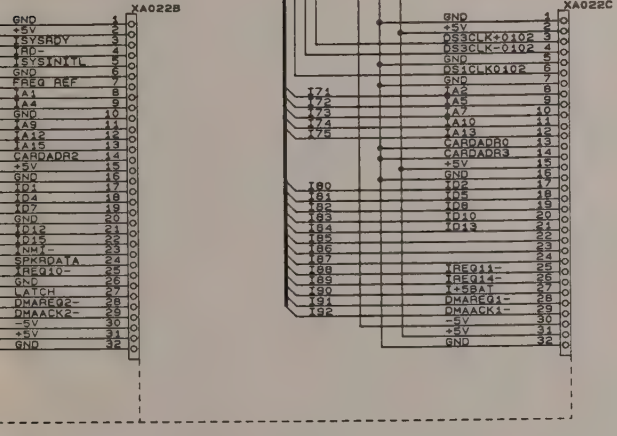

CARDADR 3 2 1 0
ADDRESS 0 0 1 1

VCC VDD +5V
GND VSS

/*BINCRC=0x1F40*/

SCIENTIFIC-ATLANTA, INC	
INSTRUMENTATION DIVISION	
4386 SHACKLEFORD RD.	
NORCROSS, GA 30093	
Title: DAS MOTHERBOARD: APPLICATION SLOT 2	
Size: C	Document Number: 459034 REV
Date: June 7, 1990	Sheet 2 of 20

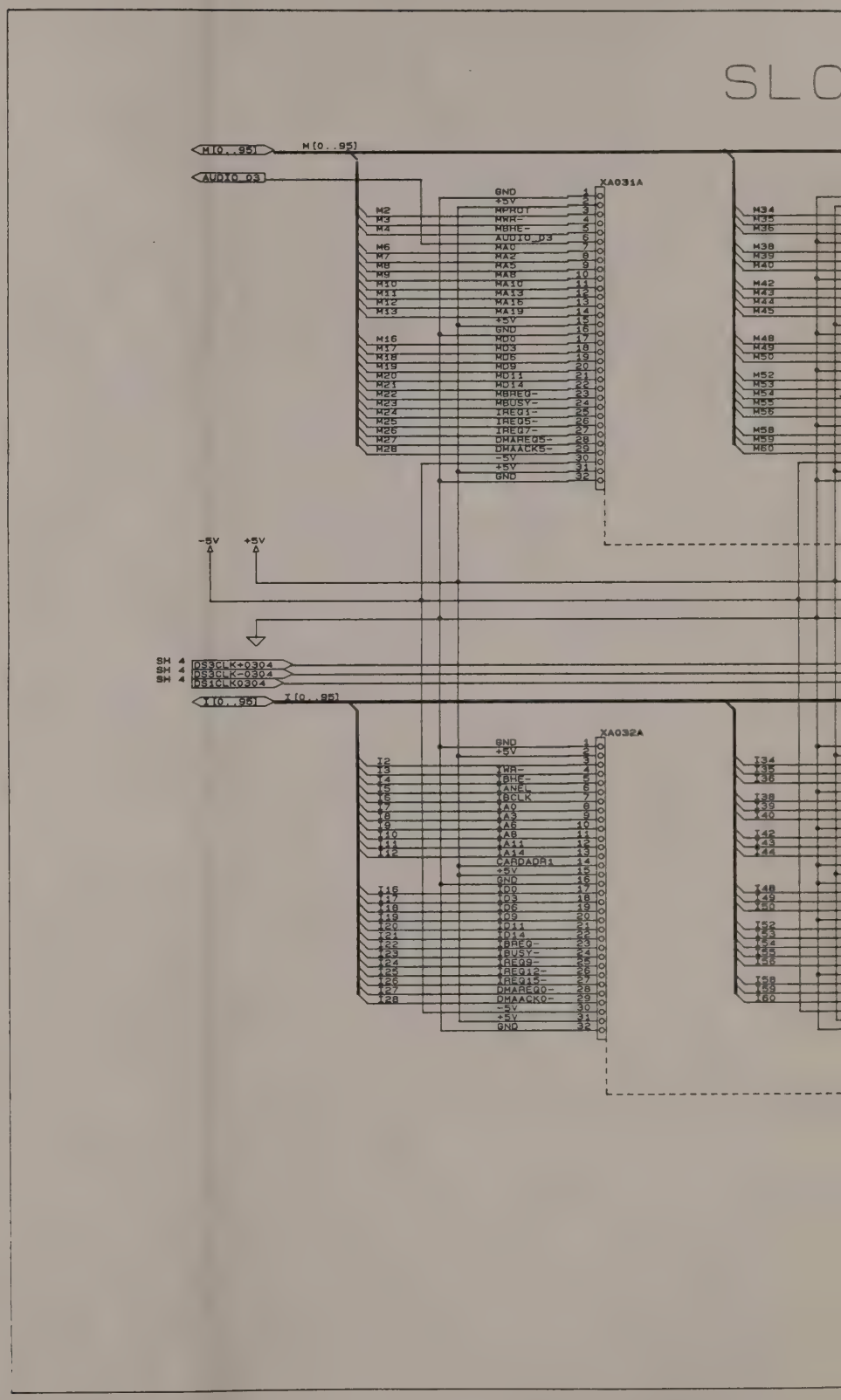
SLO
M[0..95]
AUDIO_D3
XA031A
GND
+5V
MPROT
MWR-
MBHE-
AUDIO_D3
MA0
MA2
MA5
MA8
MA10
MA13
MA16
MA19
MD0
MD3
MD6
MD9
MD11
MD14
MBREQ-
MBUSY-
IREQ1-
IREQ5-
IREQ7-
DMAREQ5-
DMAACK5-
-5V
+5V
-5V
+5V
SH 4
DS3CLK+0304
DS3CLK-0304
DS1CLK0304
I[0..95]
XA032A
IWR-
IBHE-
IANEL
IBCLK
IA0
IA3
IA6
IA8
IA11
IA14
CARDADR1
ID0
ID3
ID6
ID9
ID11
ID14
IBREQ-
IBUSY-
IREQ9-
IREQ12-
IREQ15-
DMAREQ0-
DMAACK0-

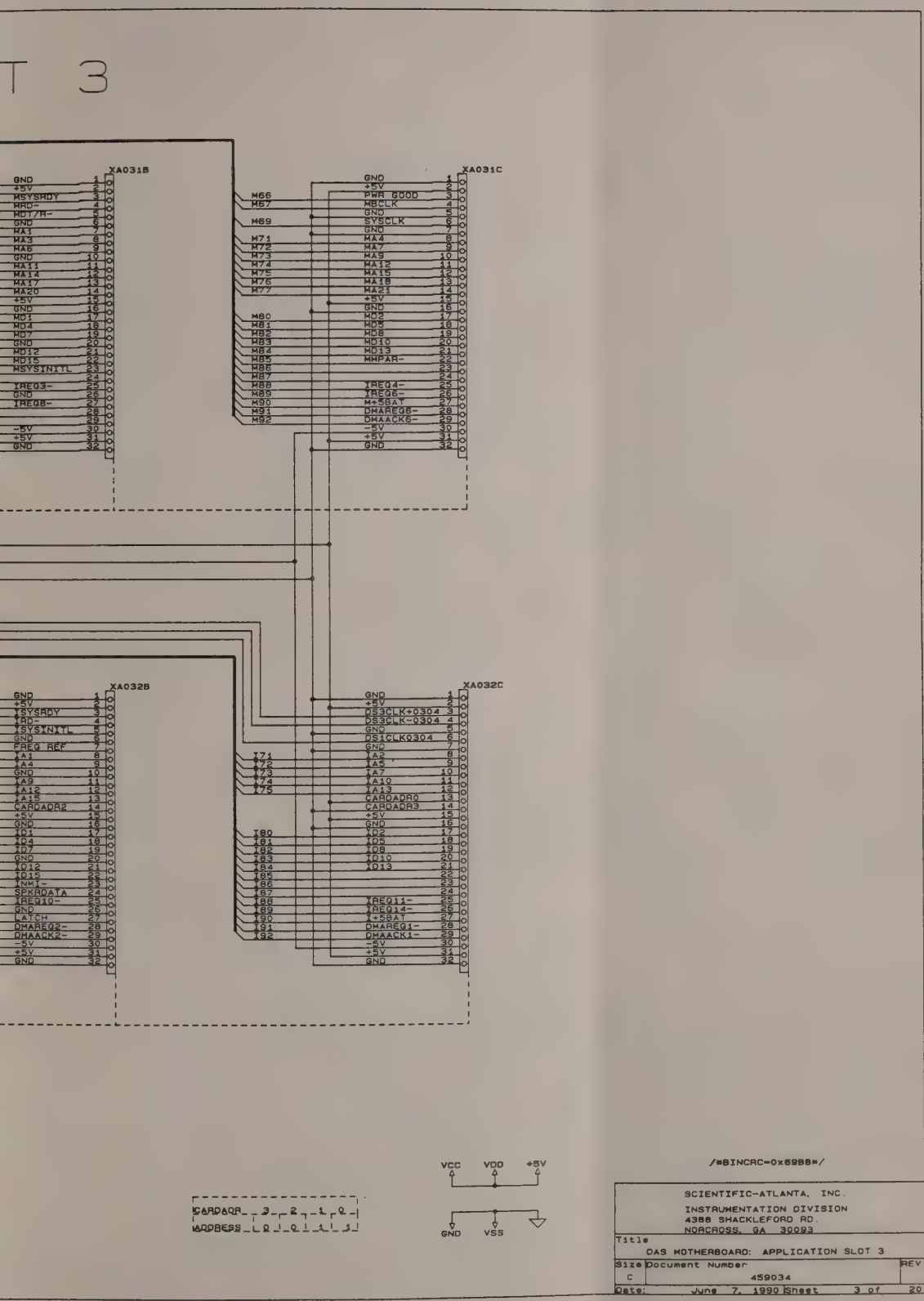
T 3
XA031B
XA031C
XA032B
XA032C
GND
+5V
MSYSRDY
MRD-
MDT/R-
MA1
MA3
MA6
MA11
MA14
MA17
MA20
MD1
MD4
MD7
MD12
MD15
MSYSINITL
IREQ3-
IREQ8-
-5V
M66
M67
M69
M71
M72
M73
M74
M75
M76
M77
M80
M81
M82
M83
M84
M85
M86
M87
M88
M89
M90
M91
M92
PWR GOOD
MBCLK
SYSCLK
MA4
MA7
MA9
MA12
MA15
MA18
MA21
MD2
MD5
MD8
MD10
MD13
MMPAR-
IREQ4-
IREQ6-
M+5BAT
DMAREQ6-
DMAACK6-
ISYSRDY
IRD-
ISYSINITL
FREQ REF
IA1
IA4
IA9
IA12
IA15
CARDADR2
ID1
ID4
ID7
ID12
ID15
INMI-
SPKRDATA
IREQ10-
LATCH
DMAREQ2-
DMAACK2-
I71
I72
I73
I74
I75
I80
I81
I82
I83
I84
I85
I86
I87
I88
I89
I90
I91
I92
DS3CLK+0304
DS3CLK-0304
DS1CLK0304
IA2
IA5
IA7
IA10
IA13
CARDADR0
CARDADR3
ID2
ID5
ID8
ID10
ID13
IREQ11-
IREQ14-
I+5BAT
DMAREQ1-
DMAACK1-
CARDADR 3 2 1 0
ADDRESS 0 0 1 1
VCC
VDD
+5V
GND
VSS
/*BINCRC=0x6988*/
SCIENTIFIC-ATLANTA, INC.
INSTRUMENTATION DIVISION
4388 SHACKLEFORD RD.
NORCROSS, GA 30093
Title
DAS MOTHERBOARD: APPLICATION SLOT 3
Size
C
Document Number
459034
REV
Date: June 7, 1990
Sheet 3 of 20

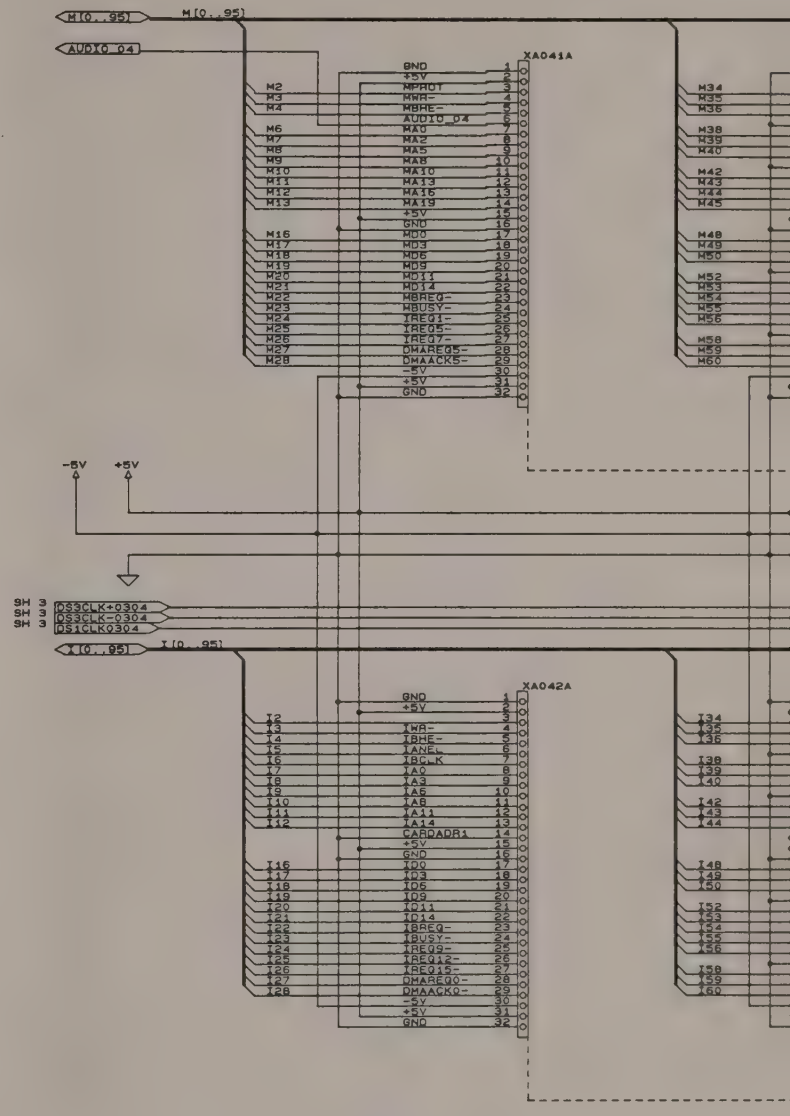
M[0..95]
AUDIO_04
XA041A
GND
+5V
MPHOT
MWR-
MBHE-
AUDIO_04
MA0
MA2
MA5
MA8
MA10
MA13
MA16
MA19
+5V
GND
MD0
MD3
MD6
MD9
MD11
MD14
MBREQ-
MBUSY-
IREQ1-
IREQ5-
IREQ7-
DMAREQ5-
DMAACK5-
-5V
+5V
GND
-5V
+5V
SH 3
DS3CLK+0304
DS3CLK-0304
DS1CLK0304
I[0..95]
XA042A
IWR-
IBHE-
IANEL
IBCLK
IA0
IA3
IA6
IA9
IA11
IA14
CARDADR1
IBREQ-
IBUSY-
IREQ9-
IREQ12-
IREQ15-
DMAREQ0-
DMAACK0-

T 4

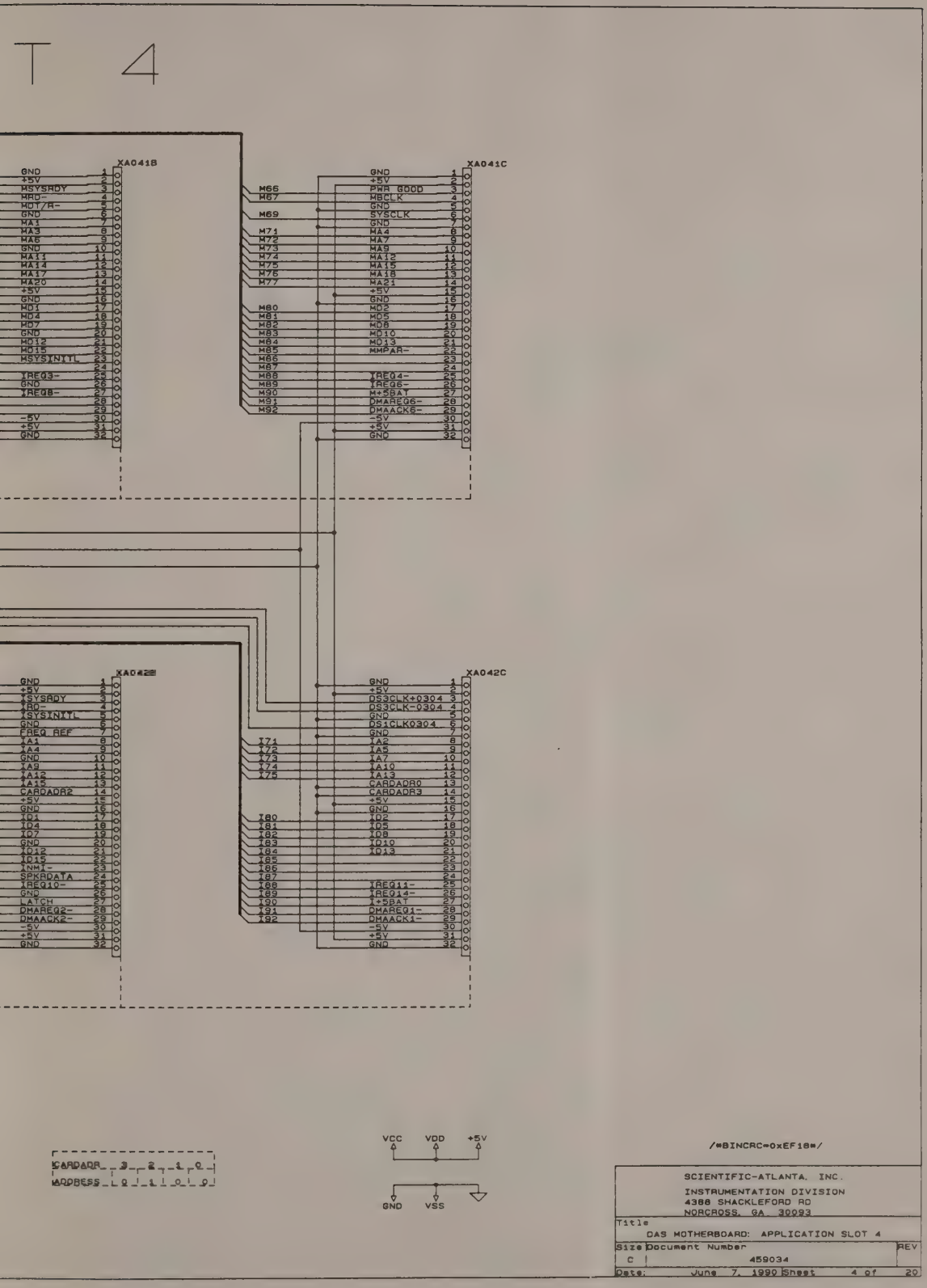
XA041B
XA041C
XA042B
XA042C
CARDADR 3 2 1 0
ADDRESS 1 0 1 1 0 1 0
VCC VDD +5V
GND VSS
/*BINCRC=0xEF18*/
SCIENTIFIC-ATLANTA, INC.
INSTRUMENTATION DIVISION
4386 SHACKLEFORD RD
NORCROSS, GA 30093
Title
DAS MOTHERBOARD: APPLICATION SLOT 4
Size C
Document Number 459034
REV
Date: June 7, 1990 Sheet 4 of 20

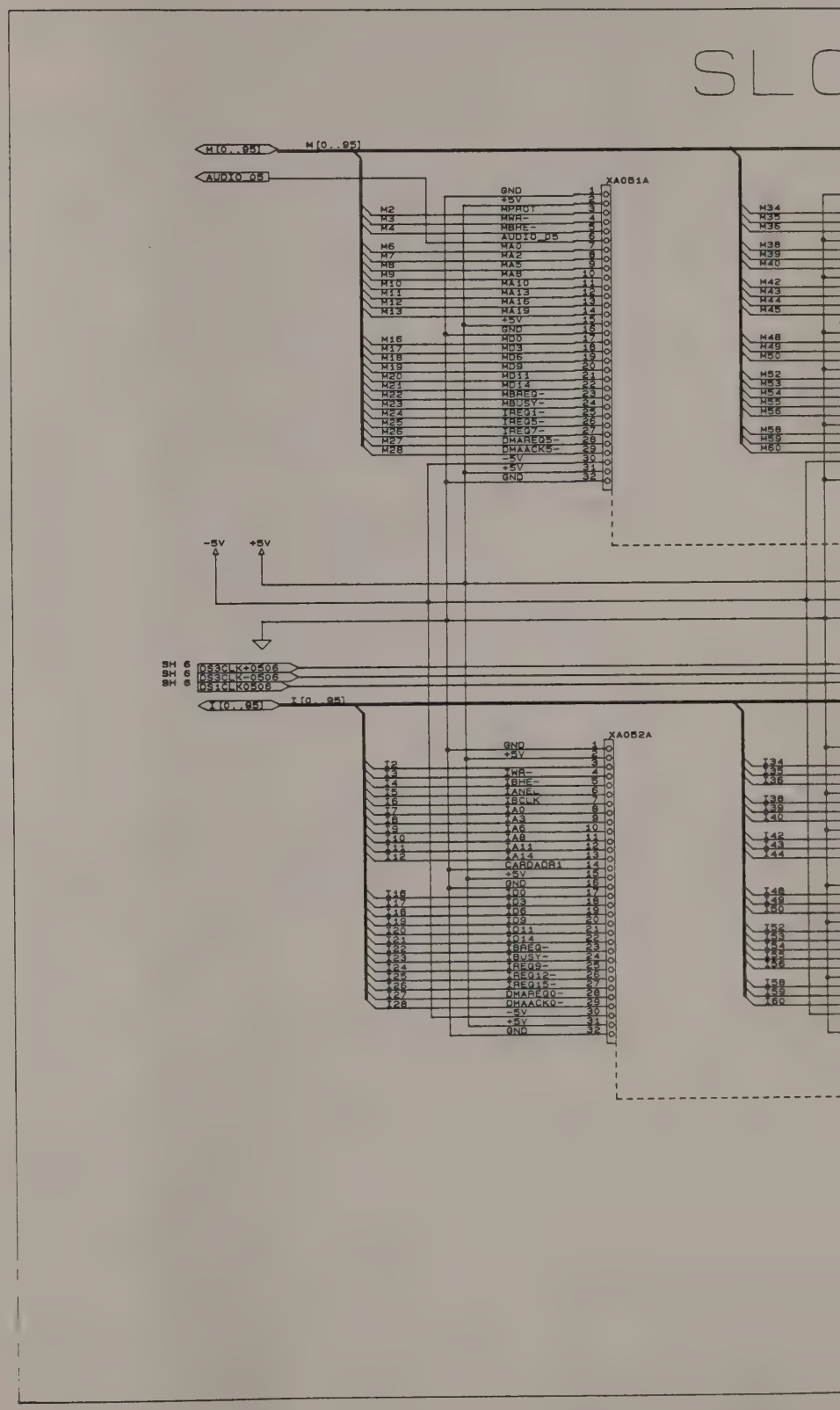
SLO
M[0..95]
AUDIO_05
XA051A
GND
+5V
MPROT
MWR-
MBHE-
AUDIO_05
MA0
MA2
MA5
MA8
MA10
MA13
MA16
MA19
+5V
GND
MD0
MD3
MD6
MD9
MD11
MD14
MBREQ-
MBUSY-
IREQ1-
IREQ5-
IREQ7-
DMAREQ5-
DMAACK5-
-5V
+5V
GND
-5V
+5V
SH 6
DS3CLK+0506
DS3CLK-0506
DS1CLK0506
I[0..95]
XA052A
GND
+5V
IWR-
IBHE-
IANEL
IBCLK
IA0
IA3
IA6
IA8
IA11
IA14
CARDADR1
+5V
GND
ID0
ID3
ID6
ID9
ID11
ID14
IBREQ-
IBUSY-
IREQ9-
IREQ12-
IREQ15-
DMAREQ0-
DMAACK0-
-5V
+5V
GND

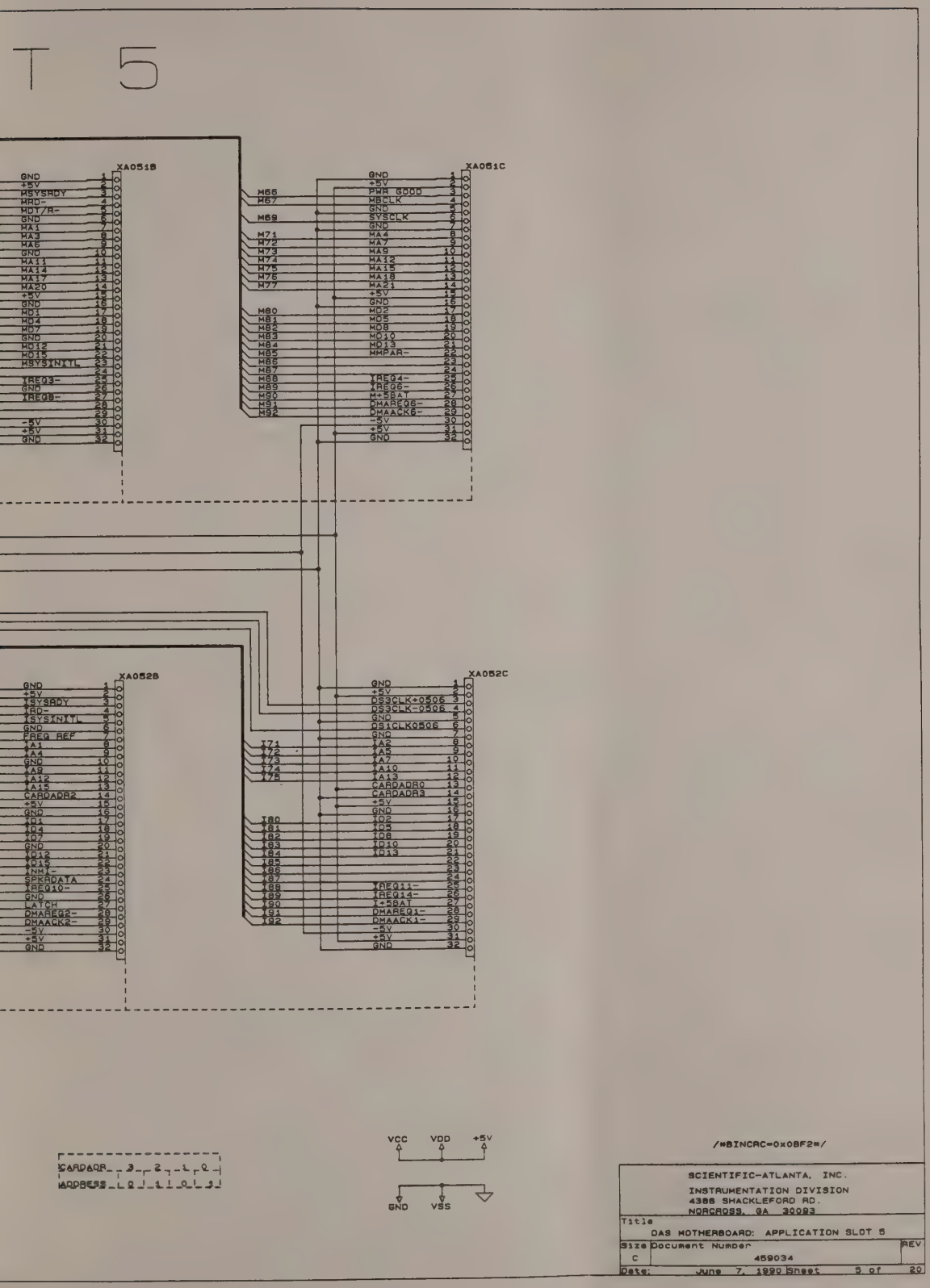
T 5
XA051B
XA051C
XA052B
XA052C
GND
+5V
MSYSRDY
MRD-
MDT/R-
MA1
MA3
MA6
MA11
MA14
MA17
MA20
MD1
MD4
MD7
MD12
MD15
MSYSINITL
IREQ3-
IREQ8-
-5V
PWR GOOD
MBCLK
SYSCLK
MA4
MA7
MA9
MA12
MA15
MA18
MA21
MD2
MD5
MD8
MD10
MD13
MMPAR-
IREQ4-
IREQ6-
M+5BAT
DMAREQ6-
DMAACK6-
ISYSRDY
IRD-
ISYSINITL
FREQ REF
IA1
IA4
IA9
IA12
IA15
CARDADR2
ID1
ID4
ID7
ID12
ID15
INMI-
SPKRDATA
IREQ10-
LATCH
DMAREQ2-
DMAACK2-
DS3CLK+0506
DS3CLK-0506
DS1CLK0506
IA2
IA5
IA7
IA10
IA13
CARDADR0
CARDADR3
ID2
ID5
ID8
ID10
ID13
IREQ11-
IREQ14-
I+5BAT
DMAREQ1-
DMAACK1-
CARDADR 3 2 1 0
ADDRESS 0 1 0 1
VCC VDD +5V
GND VSS
/*BINCRC=0x0BF2*/
SCIENTIFIC-ATLANTA, INC.
INSTRUMENTATION DIVISION
4388 SHACKLEFORD RD.
NORCROSS, GA 30093
Title
DAS MOTHERBOARD: APPLICATION SLOT 5
Size C
Document Number 459034
REV
Date: June 7, 1990
Sheet 5 of 20

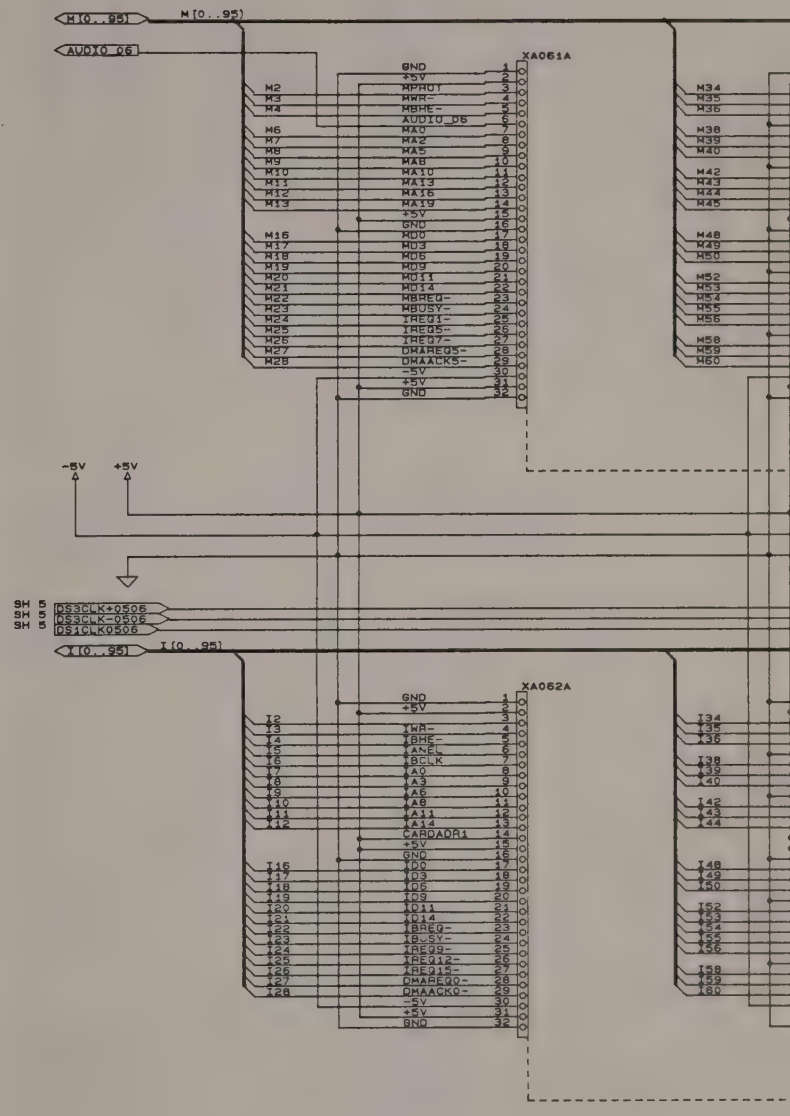
SLO
M[0..95]
AUDIO_D6
XA061A
GND
+5V
MPHOT
MWR-
MBHE-
AUDIO_D6
MA0
MA2
MA5
MA8
MA10
MA13
MA16
MA19
+5V
GND
MD0
MD3
MD6
MD9
MD11
MD14
MBREQ-
MBUSY-
IREQ1-
IREQ5-
IREQ7-
DMAREQ5-
DMAACK5-
-5V
+5V
GND
-5V
+5V
SH 5 DS3CLK+0506
SH 5 DS3CLK-0506
SH 5 DS1CLK0506
I[0..95]
XA062A
GND
+5V
IWR-
IBHE-
IANEL
IBCLK
IA0
IA3
IA6
IA8
IA11
IA14
CARDADR1
+5V
GND
ID0
ID3
ID6
ID9
ID11
ID14
IBREQ-
IB-SY-
IREQ9-
IREQ12-
IREQ15-
DMAREQ0-
DMAACK0-
-5V
+5V
GND

T 6

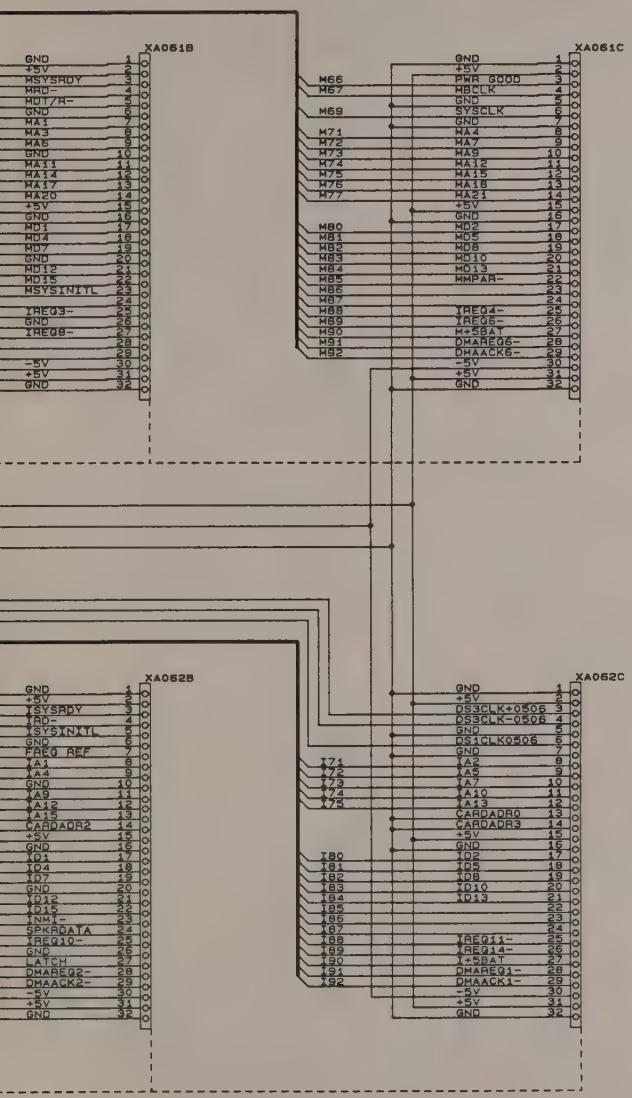

SCIENTIFIC-ATLANTA, INC.
INSTRUMENTATION DIVISION
4386 SHACKLEFORD RD.
NORCROSS, GA 30093

Title		
DAS MOTHERBOARD: APPLICATION SLOT 6		
Size C	Document Number 459034	REV
Date: June 7, 1990	Sheet 6 of 20	

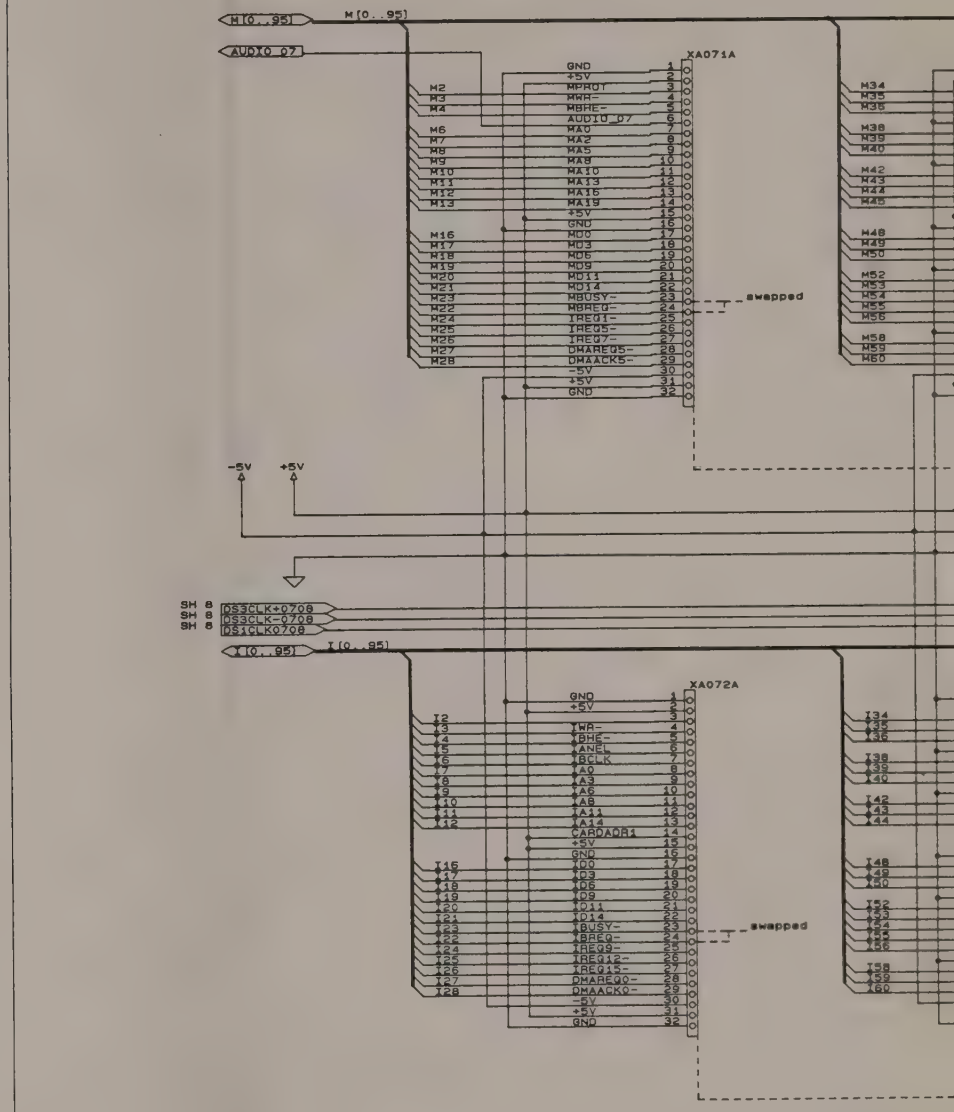
M[0..95]
AUDIO_07
XA071A
GND
+5V
MPROT
MWR-
MBHE-
AUDIO_07
MA0
MA2
MA5
MA8
MA10
MA13
MA16
MA19
+5V
GND
MD0
MD3
MD6
MD9
MD11
MD14
MBUSY-
MBREQ-
IREQ1-
IREQ5-
IREQ7-
DMAREQ5-
DMAACK5-
-5V
+5V
GND
swapped
-5V
+5V
SW 8
SW 8
SW 8
DS3CLK+0708
DS3CLK-0708
DS1CLK0708
I[0..95]
XA072A
IWR-
IBHE-
IANEL
IBCLK
IA0
IA3
IA6
IA8
IA11
IA14
CARDADR1
ID0
ID3
ID6
ID9
ID11
ID14
IBUSY-
IBREQ-
IREQ9-
IREQ12-
IREQ15-
DMAREQ0-
DMAACK0-

T 7

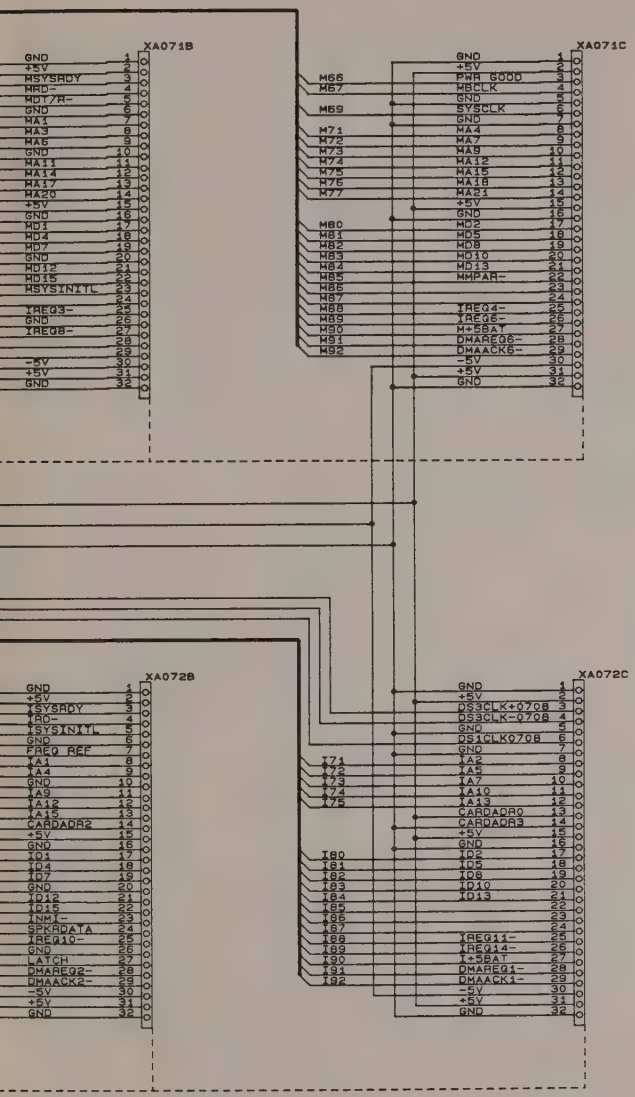

CARDADR 3 2 1 0
ADDRESS 10 11 12 13

VCC VDD +5V

GND VSS

/*BINCRC=0x99FE*/

SCIENTIFIC-ATLANTA, INC.
INSTRUMENTATION DIVISION
4386 SHACKLEFORD RD.
NORCROSS, GA 30093

Title
DAS MOTHERBOARD: APPLICATION SLOT 7

Size	Document Number	REV
C	459034	

Date: June 7, 1990 Sheet 7 of 20

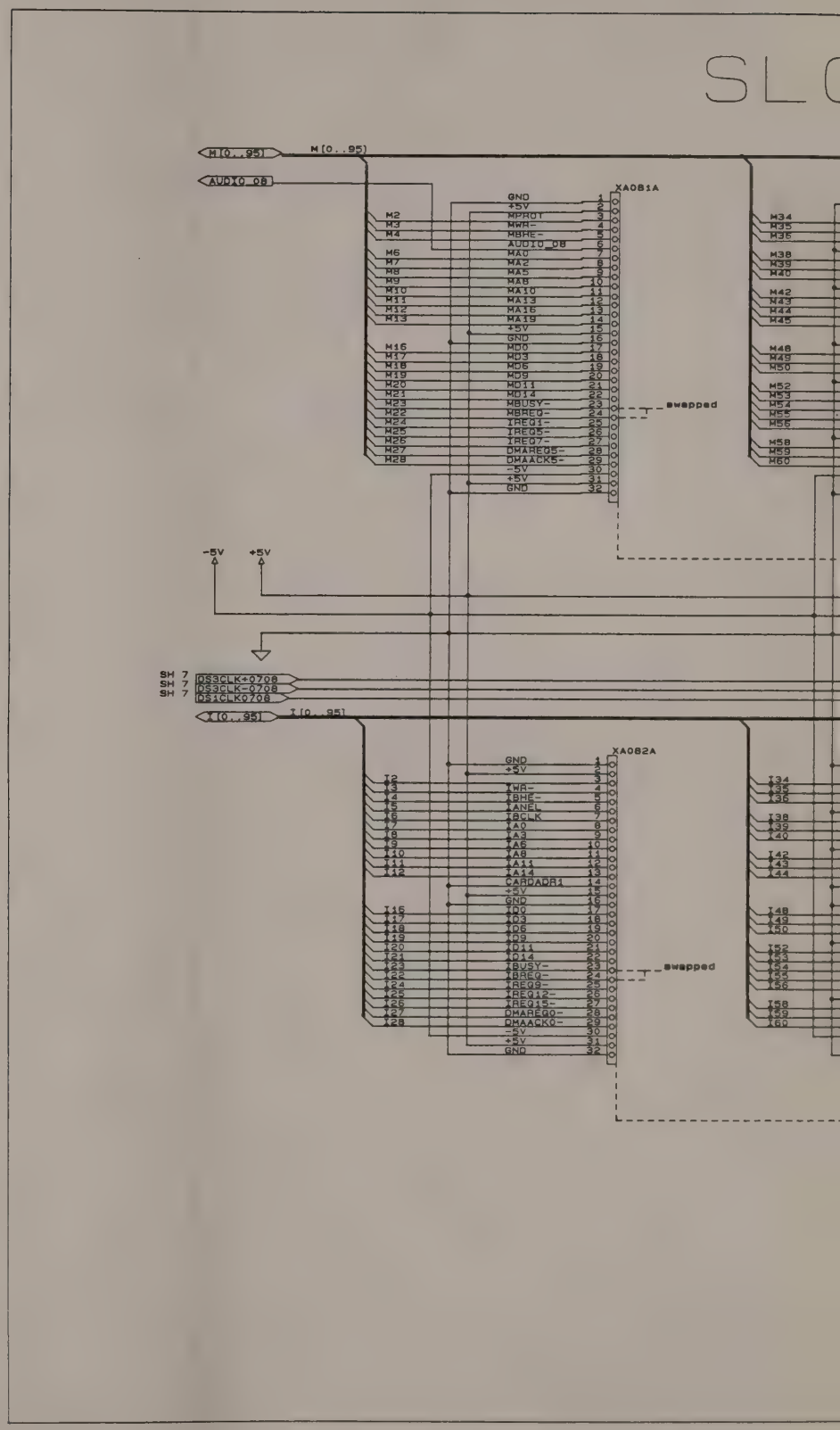
SLO
M[0..95]
AUDIO_08
XA081A
GND
+5V
MPROT
MWR-
MBHE-
AUDIO_08
MA0
MA2
MA5
MA8
MA10
MA13
MA16
MA19
+5V
GND
MD0
MD3
MD6
MD9
MD11
MD14
MBUSY-
MBREQ-
IREQ1-
IREQ5-
IREQ7-
DMAREQ5-
DMAACK5-
-5V
+5V
GND
swapped
-5V
+5V
SH 7
DS3CLK+0708
DS3CLK-0708
DS1CLK0708
I[0..95]
XA082A
GND
+5V
IWR-
IBHE-
IANEL
IBCLK
IA0
IA3
IA6
IA8
IA11
IA14
CARDADR1
+5V
GND
ID0
ID3
ID6
ID9
ID11
ID14
IBUSY-
IBREQ-
IREQ9-
IREQ12-
IREQ15-
DMAREQ0-
DMAACK0-
-5V
+5V
GND
swapped

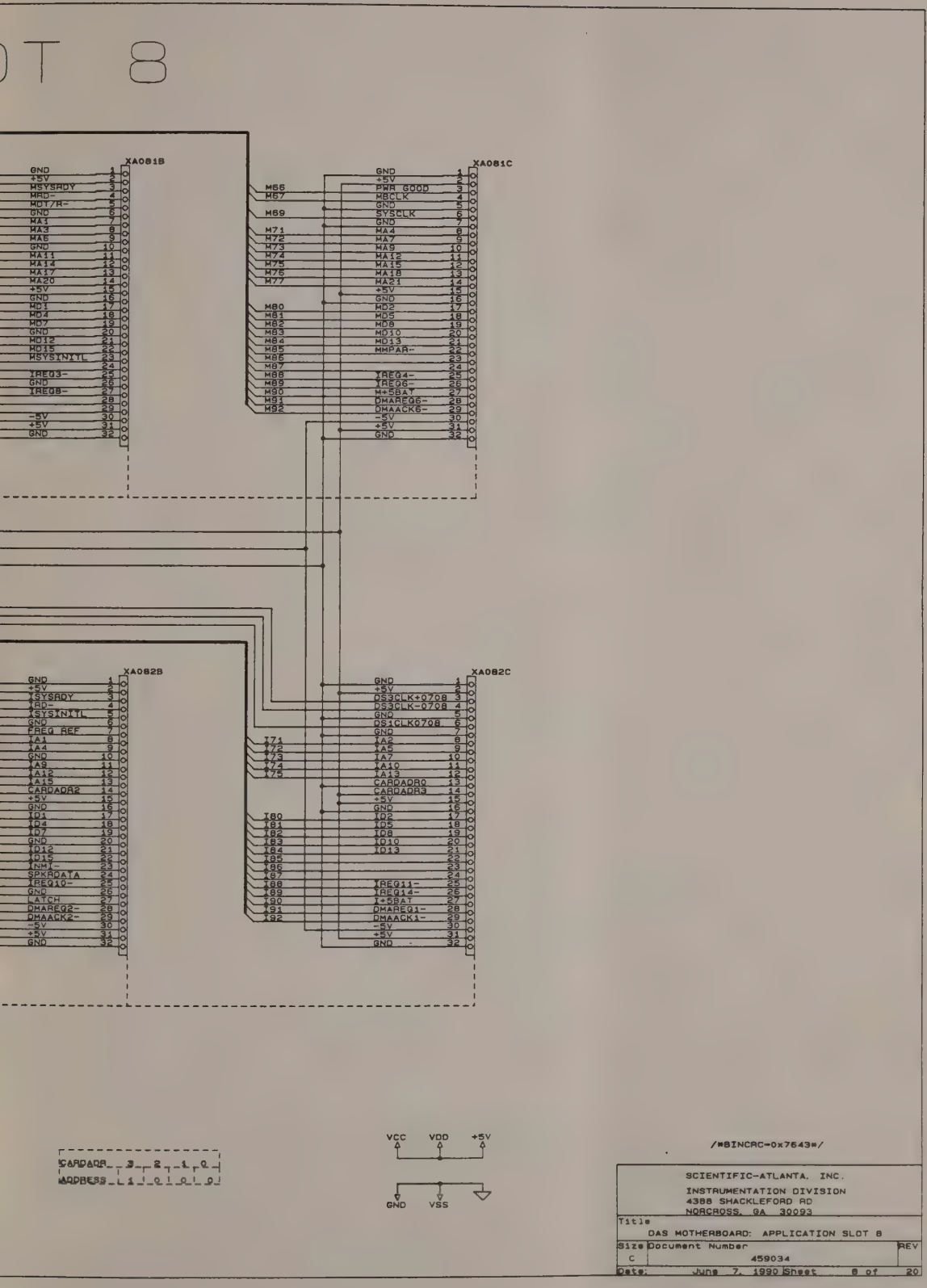
OT 8
XA081B
XA081C
XA082B
XA082C
CARDADR 3 2 1 0
ADDRESS 1 1 0 1 0 1
VCC VDD +5V
GND VSS
/*8INCRC-0x7643*/
SCIENTIFIC-ATLANTA, INC.
INSTRUMENTATION DIVISION
4388 SHACKLEFORD RD
NORCROSS, GA 30093
Title
DAS MOTHERBOARD: APPLICATION SLOT 8
Size C
Document Number 459034
REV
Date: June 7, 1990 Sheet 8 of 20

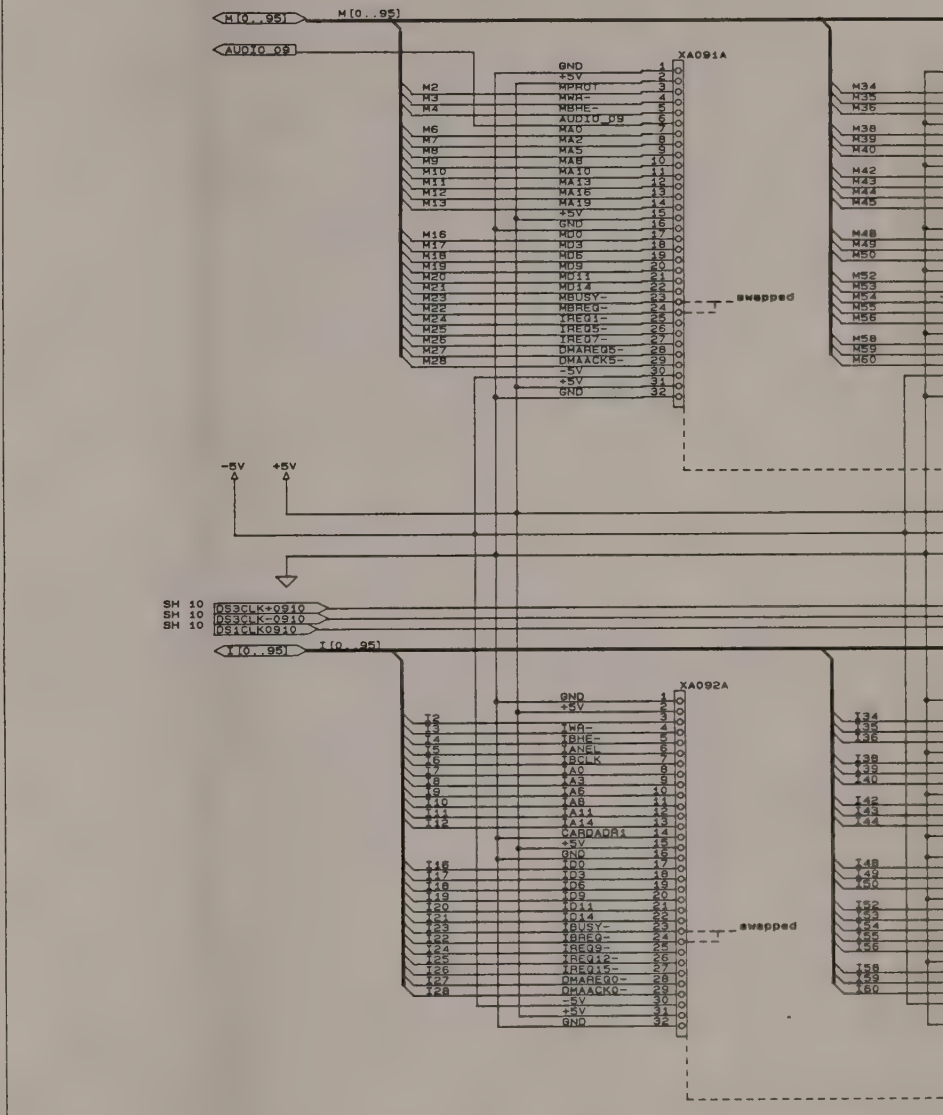
M[0..95]
AUDIO_09
XA091A
swapped
-5V
+5V
SH 10 DS3CLK+0910
SH 10 DS3CLK-0910
SH 10 DS1CLK0910
I[0..95]
XA092A
swapped

T 9

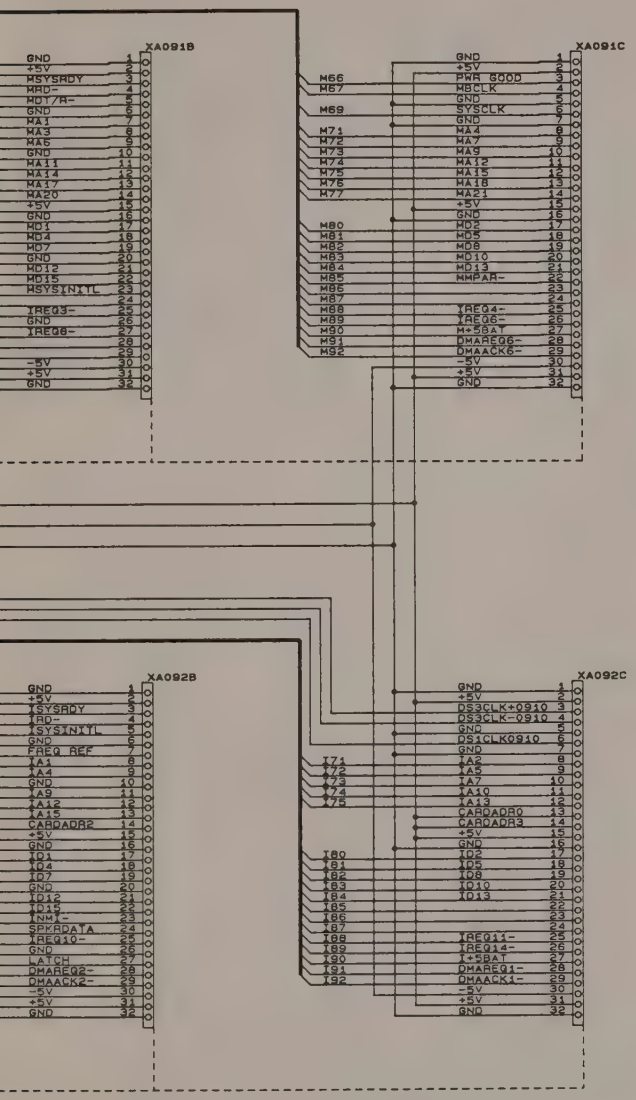

SCIENTIFIC-ATLANTA, INC.	
INSTRUMENTATION DIVISION 4386 SHACKLEFORD RD. NORCROSS, GA 30093	
Title: DAS MOTHERBOARD: APPLICATON SLOT 9	
Size: C	Document Number: 459034 REV
Date: June 7, 1990	Sheet 9 of 20

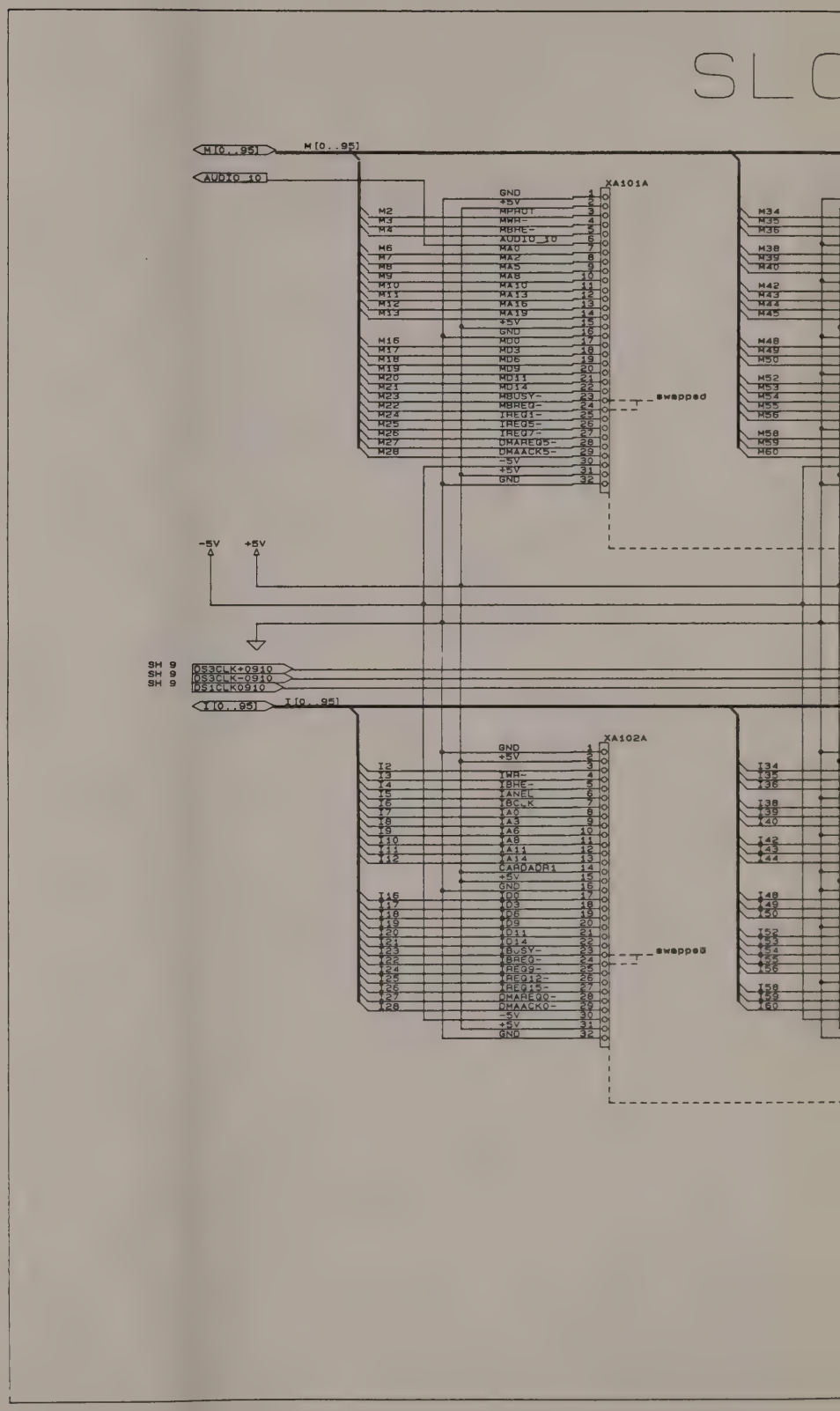
SLO
M[0..95]
AUDIO_10
XA101A
swapped
-5V
+5V
SH 9
DS3CLK+0910
DS3CLK-0910
DS1CLK0910
I[0..95]
XA102A
swapped

T 10

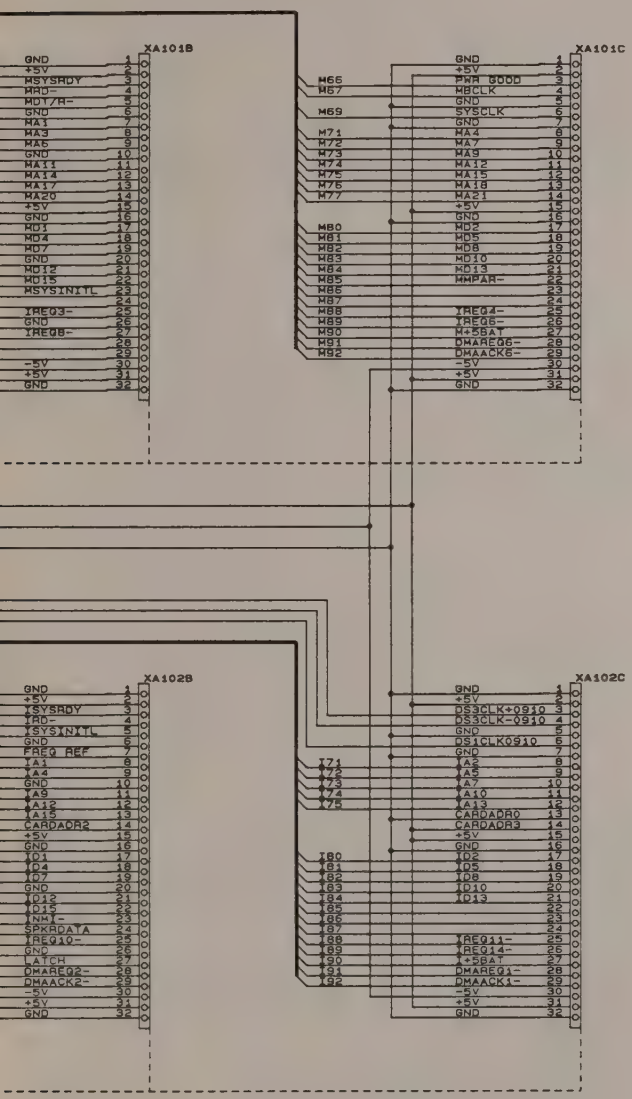

CARDADR [3 2 1 0]
ADDRESS [3 2 1 0]

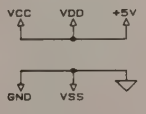

/*BINCRC=0x85F4*/

SCIENTIFIC-ATLANTA, INC.
INSTRUMENTATION DIVISION
4368 SHACKLEFORD RD.
NORCROSS, GA 30093

Title
DAS MOTHERBOARD: APPLICATION SLOT 10

Size	Document Number	REV
C	459034	

Date: June 7, 1990 Sheet 10 of 20

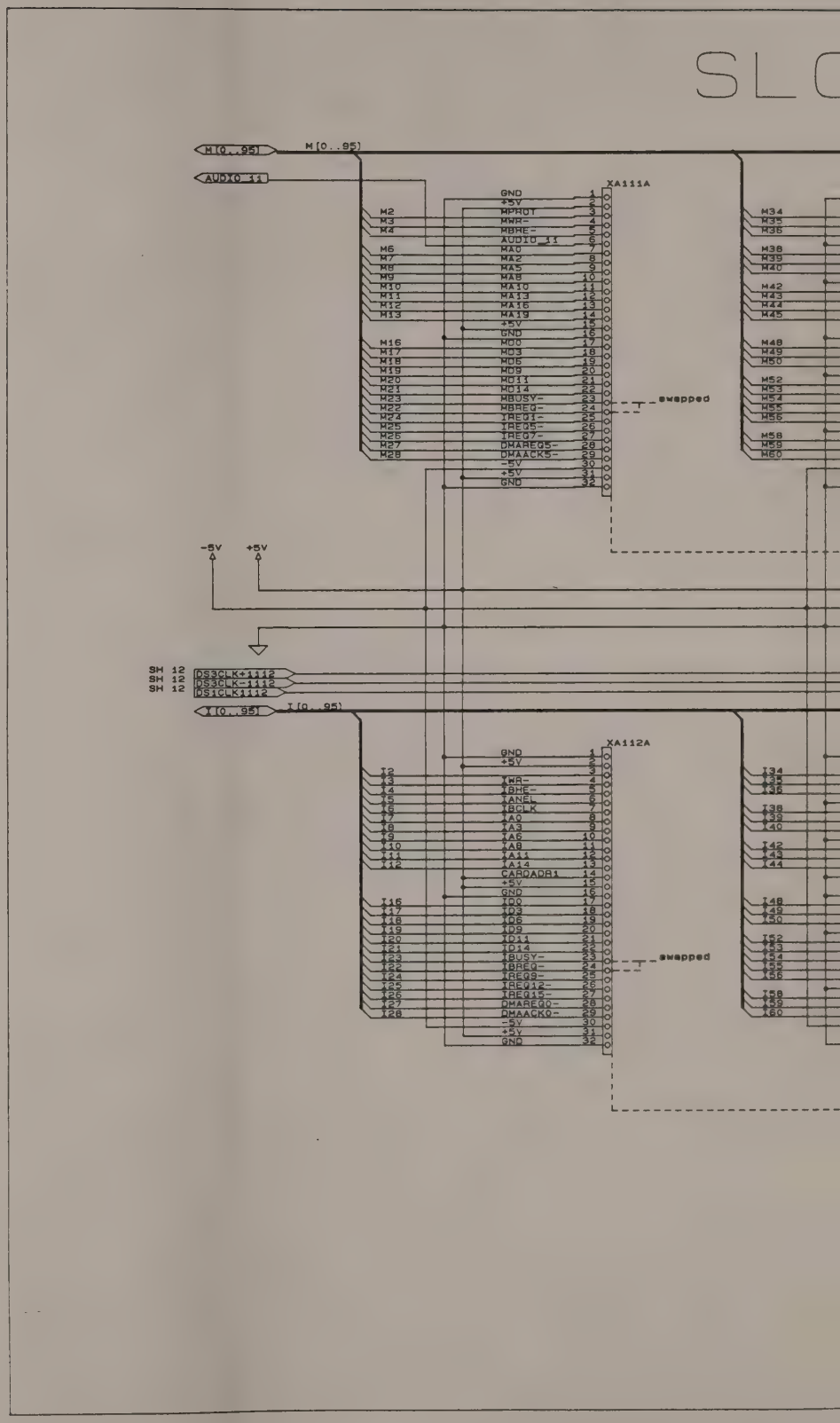
SLO
M[0..95]
AUDIO_11
XA111A
GND
+5V
MPROT
MWR-
MBHE-
AUDIO_11
MA0
MA2
MA5
MA8
MA10
MA13
MA16
MA19
+5V
GND
MD0
MD3
MD6
MD9
MD11
MD14
MBUSY-
MBREQ-
IREQ1-
IREQ5-
IREQ7-
DMAREQ5-
DMAACK5-
-5V
+5V
GND
swapped
-5V
+5V
SH 12
DS3CLK+1112
DS3CLK-1112
DS1CLK1112
I[0..95]
XA112A
GND
+5V
IWR-
IBHE-
IANEL
IBCLK
IA0
IA3
IA6
IA8
IA11
IA14
CARDADR1
+5V
GND
ID0
ID3
ID6
ID9
ID11
ID14
IBUSY-
IBREQ-
IREQ9-
IREQ12-
IREQ15-
DMAREQ0-
DMAACK0-
-5V
+5V
GND
swapped

T 11

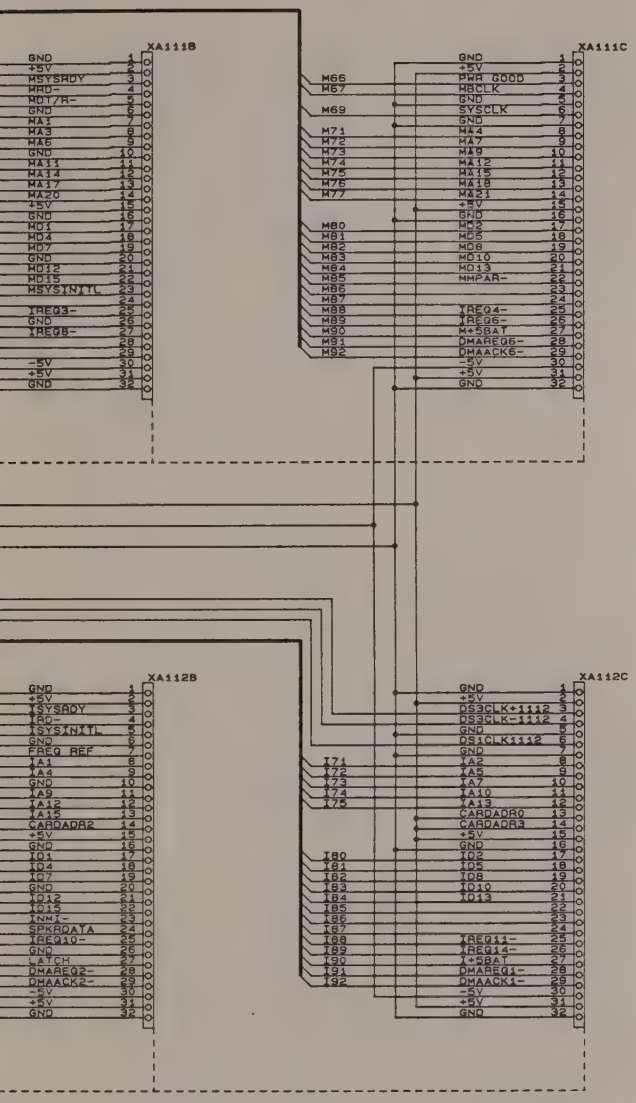

CARDADR 3 2 1 0
ADDRESS 1 0 3 2

VCC VDD +5V

GND VSS

/*BINCRC=0x1C0E*/

SCIENTIFIC-ATLANTA, INC.
INSTRUMENTATION DIVISION
4386 SHACKLEFORD RD.
NORCROSS, GA 30093

Title: DAS MOTHERBOARD: APPLICATION SLOT 11

Size: C | Document Number: 459034 | REV:

Date: June 7, 1990 | Sheet 11 of 20

SLO

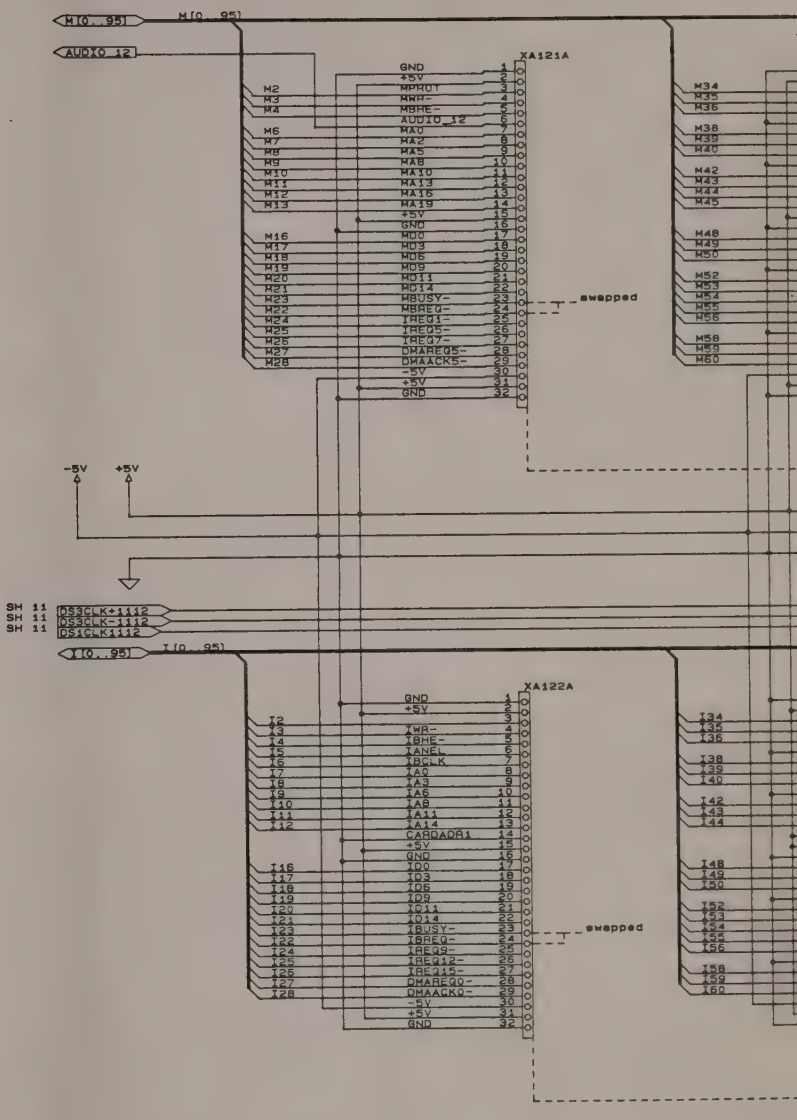
M[0..95]
AUDIO[2]
XA121A
swapped
-5V
+5V
SH 11 DS3CLK+1112
SH 11 DS3CLK-1112
SH 11 DS1CLK1112
I[0..95]
XA122A
swapped

T 12

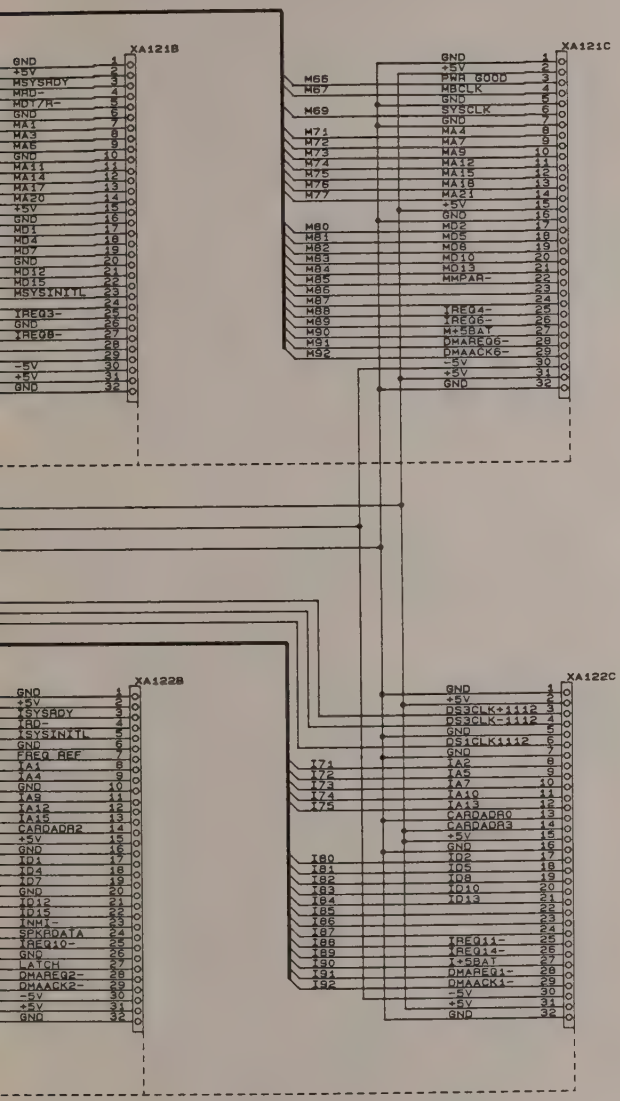

/*BINCRC=0x8FB1*/

SCIENTIFIC-ATLANTA, INC.
INSTRUMENTATION DIVISION
4386 SHACKLEFORD RD.
NORCROSS, GA 30093

Title
DAS MOTHERBOARD: APPLICATION SLOT 12

Size	Document Number	REV
C	459034	

Date: June 7, 1990 Sheet 12 of 20

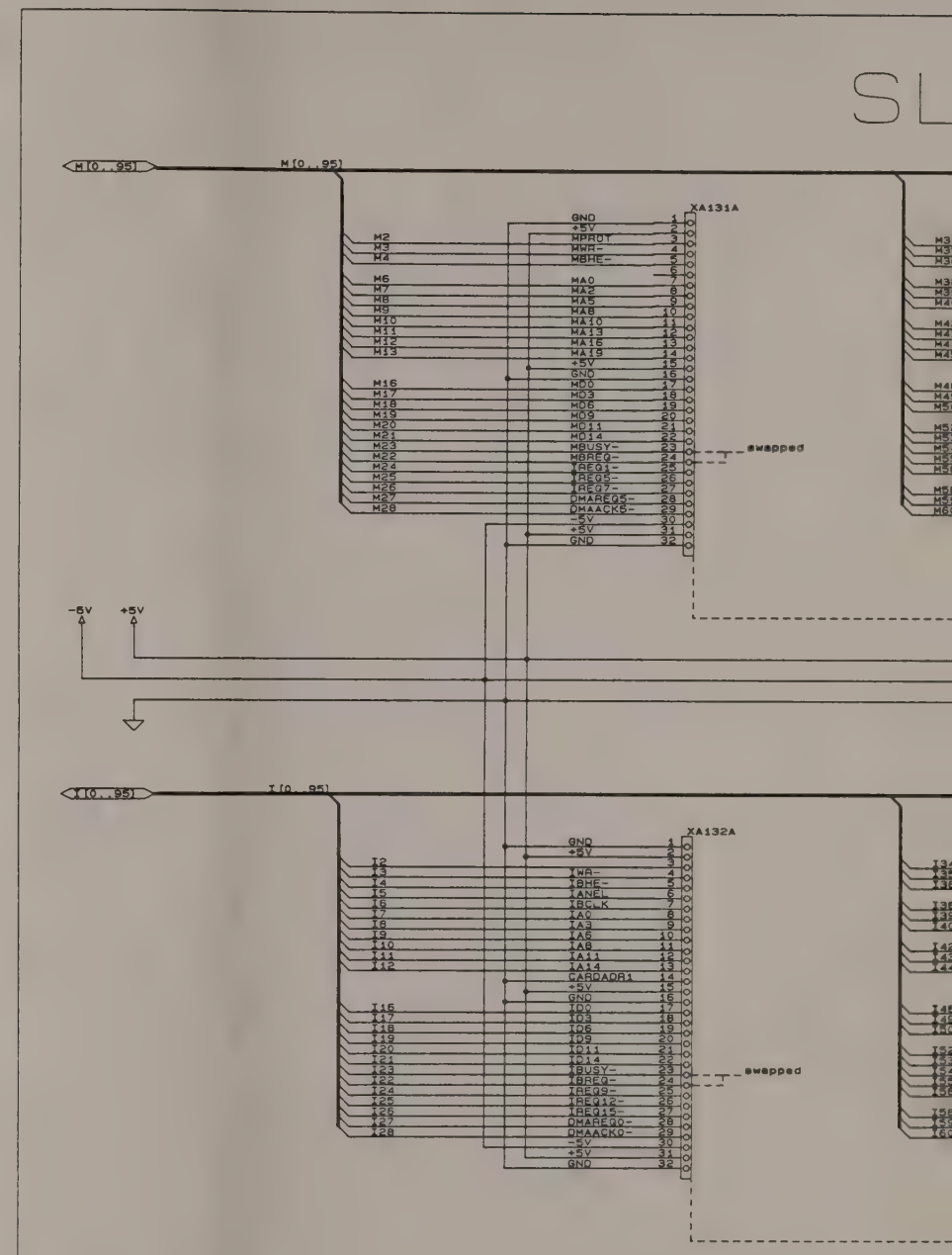
SL
M[0..95]
M[0..95]
XA131A
GND
+5V
MPROT
MWR-
MBHE-
MA0
MA2
MA5
MA8
MA10
MA13
MA16
MA19
+5V
GND
MD0
MD3
MD6
MD9
MD11
MD14
MBUSY-
MBREQ-
IAEQ1-
IAEQ5-
IAEQ7-
DMAREQ5-
DMAACK5-
-5V
+5V
GND
swapped
-5V
+5V
I[0..95]
I[0..95]
XA132A
GND
+5V
IWR-
IBHE-
IANEL
IBCLK
IA2
IA3
IA5
IA8
IA11
IA14
CARDADR1
+5V
GND
ID0
ID3
ID6
ID9
ID11
ID14
IBUSY-
IBREQ-
IAEQ9-
IAEQ12-
IAEQ15-
DMAREQ0-
DMAACK0-
-5V
+5V
GND
swapped

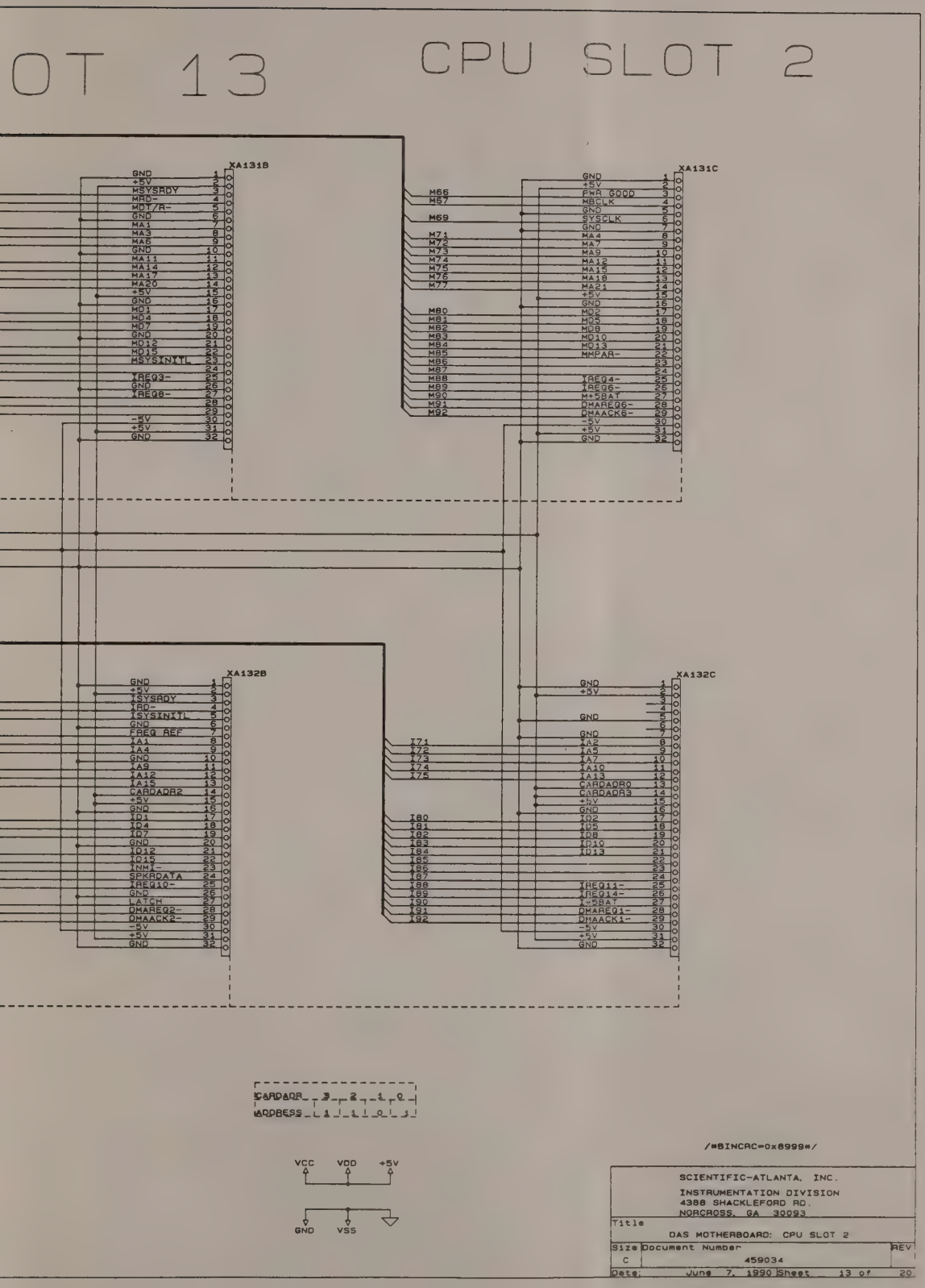
OT 13
CPU SLOT 2
XA131B
XA131C
XA132B
XA132C
CARDADR 3 2 1 0
ADDRESS 1 1 0 0
/*BINCRC=0x8999*/
VCC VDD +5V
GND VSS
SCIENTIFIC-ATLANTA, INC.
INSTRUMENTATION DIVISION
4388 SHACKLEFORD RD.
NORCROSS, GA 30093
Title
DAS MOTHERBOARD: CPU SLOT 2
Size C
Document Number 459034
REV
Date: June 7, 1990 Sheet 13 of 20

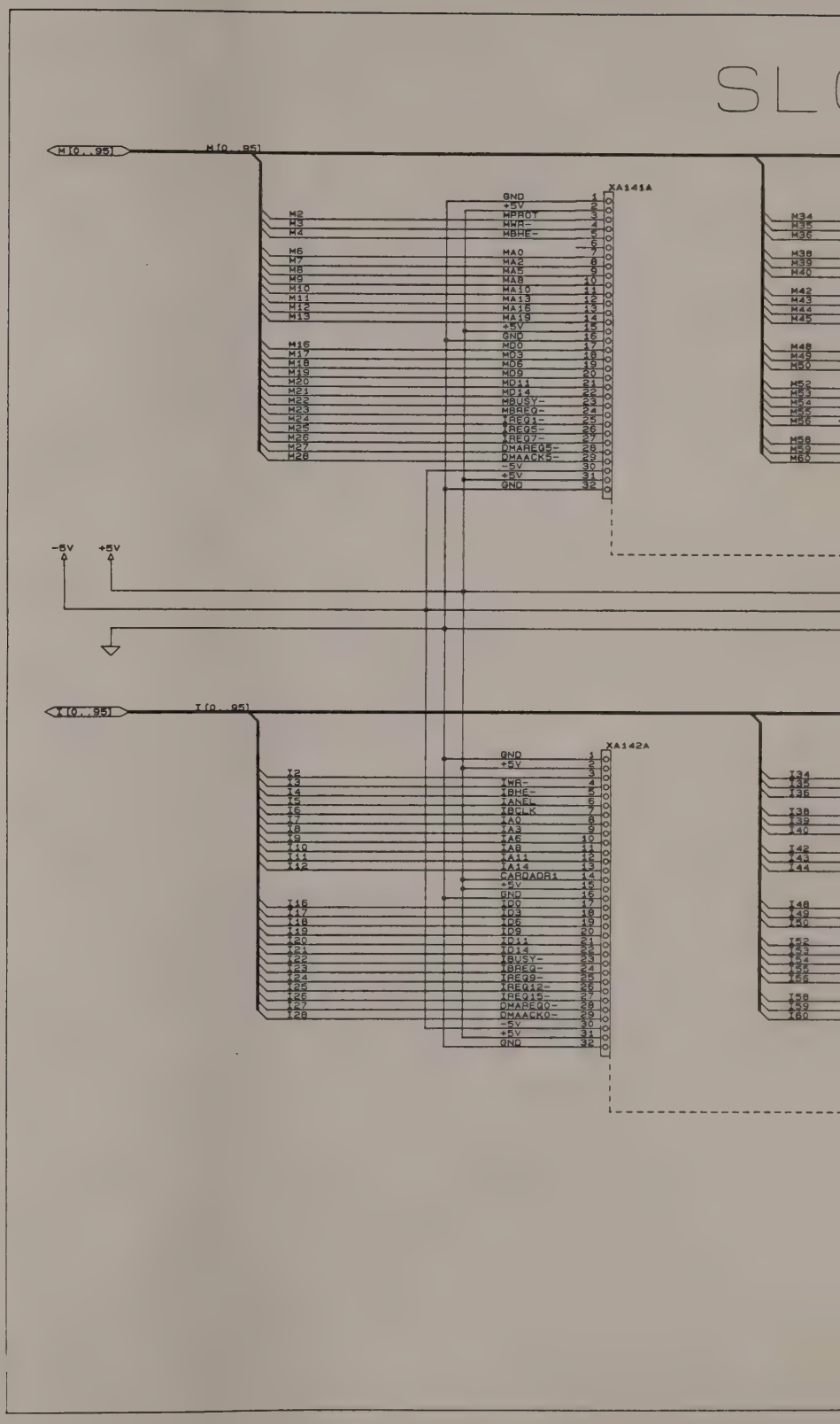
SL
M[0..95]
XA141A
GND
+5V
WPROT
MWR-
MBHE-
MA0
MA2
MA5
MA8
MA10
MA12
MA13
MA16
MA19
+5V
GND
MD0
MD3
MD6
MD9
MD11
MD14
MBUSY-
MBREQ-
IREQ1-
IREQ5-
IREQ7-
DMAREQ5-
DMAACK5-
-5V
+5V
GND
-5V
+5V
I[0..95]
XA142A
GND
+5V
IWR-
IBHE-
IAEL
IBCLK
IA0
IA3
IA6
IA8
IA11
IA14
CARDADR1
+5V
GND
ID0
ID3
ID6
ID9
ID11
ID14
IBUSY-
IBREQ-
IREQ9-
IREQ12-
IREQ15-
DMAREQ0-
DMAACK0-
-5V
+5V
GND

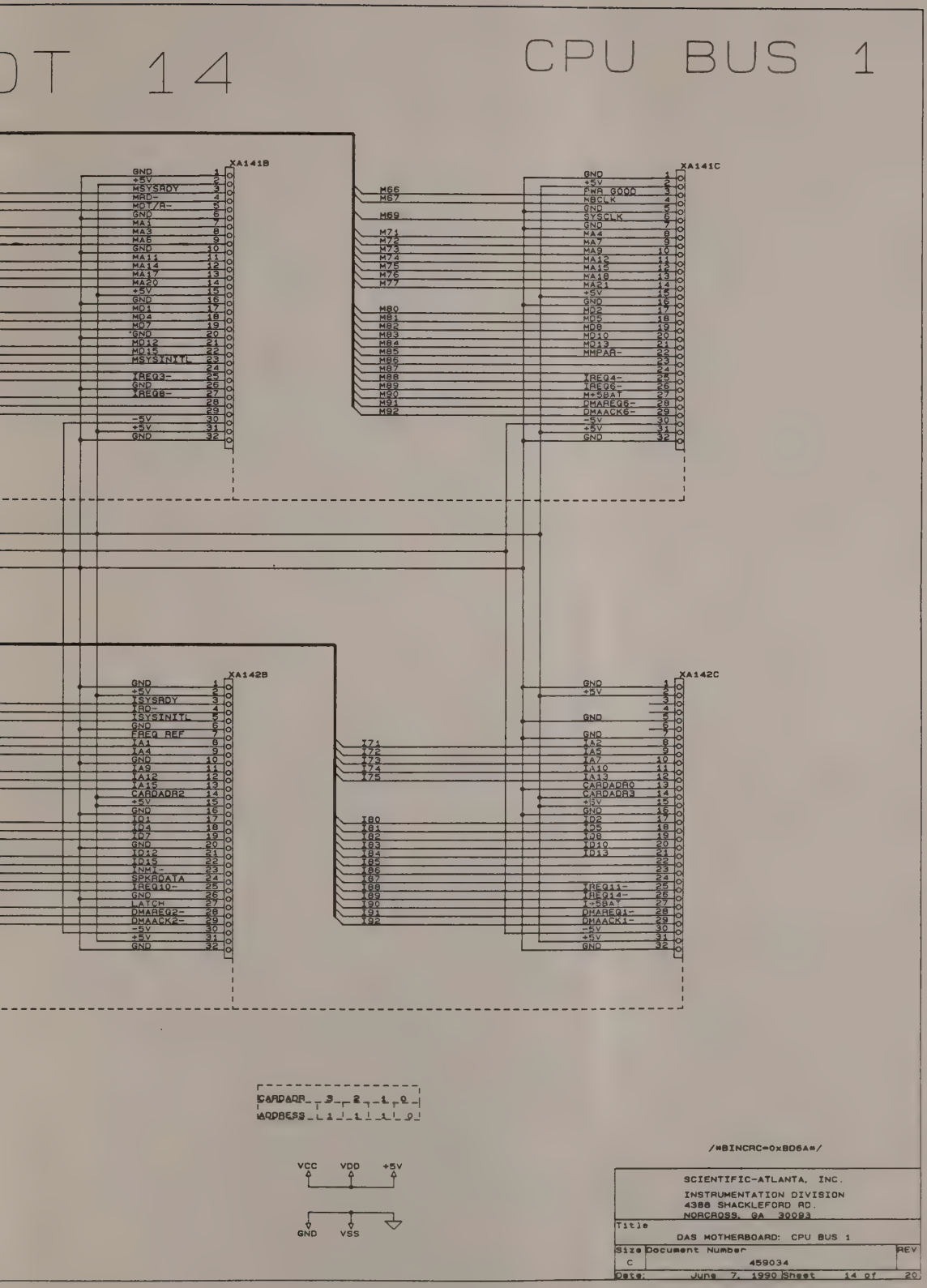
OT 14
CPU BUS 1
XA141B
XA141C
XA142B
XA142C
CARDADR 3 2 1 0
LADDRESS 1 1 1 1 0
/*BINCRC=0xBD6A*/
VCC VDD +5V
GND VSS
SCIENTIFIC-ATLANTA, INC.
INSTRUMENTATION DIVISION
4386 SHACKLEFORD RD.
NORCROSS, GA 30093
Title
DAS MOTHERBOARD: CPU BUS 1
Size C
Document Number 459034
REV
Date: June 7, 1990 Sheet 14 of 20

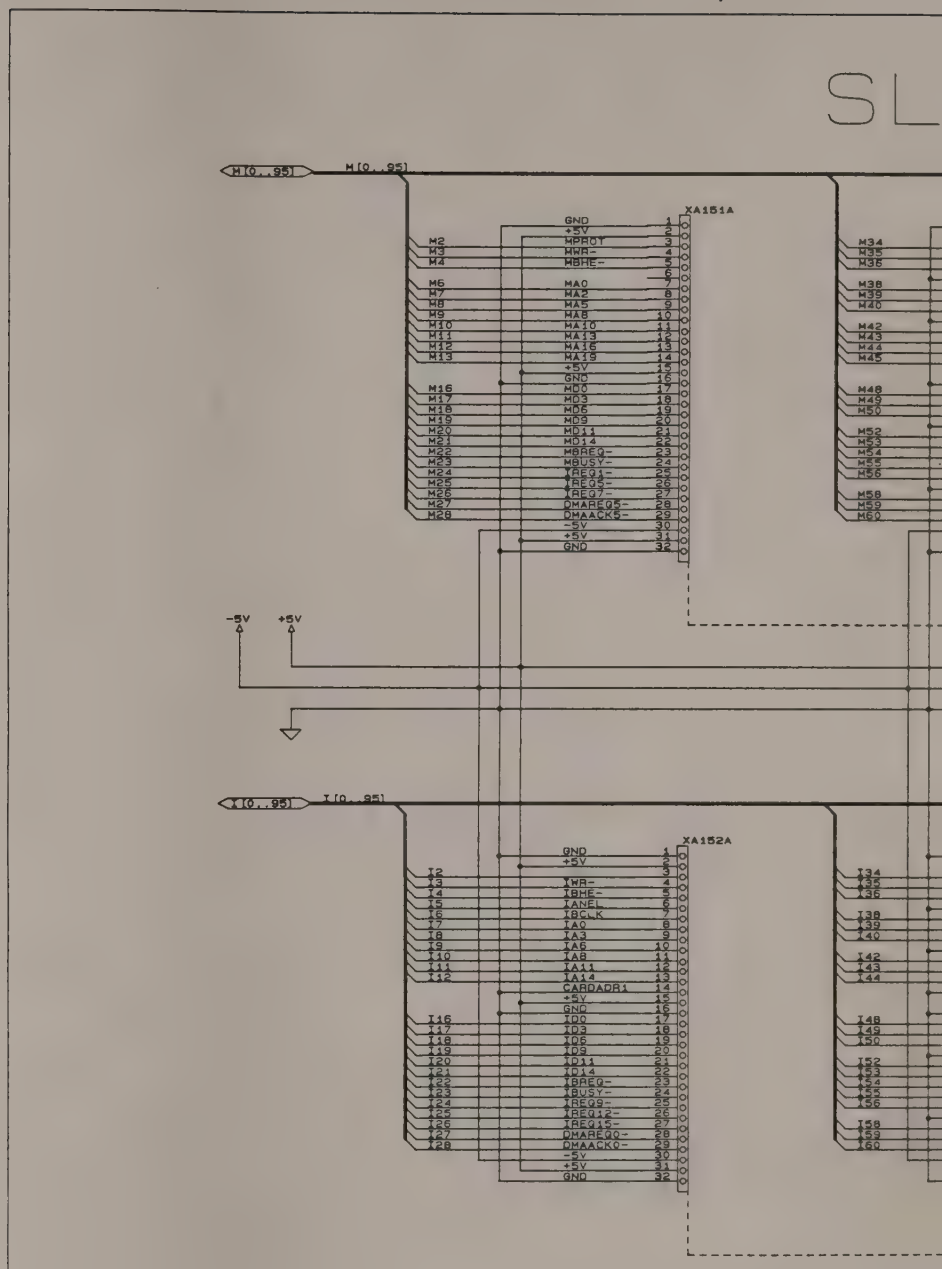
SL
M[0..95]
XA151A
GND 1
+5V 2
MPROT 3
MWR- 4
MBHE- 5
6
MA0 7
MA2 8
MA5 9
MA8 10
MA10 11
MA13 12
MA16 13
MA19 14
+5V 15
GND 16
MD0 17
MD3 18
MD6 19
MD9 20
MD11 21
MD14 22
MBREQ- 23
MBUSY- 24
IREQ1- 25
IREQ5- 26
IREQ7- 27
DMAREQ5- 28
DMAACK5- 29
-5V 30
+5V 31
GND 32
M2 M3 M4 M6 M7 M8 M9 M10 M11 M12 M13 M16 M17 M18 M19 M20 M21 M22 M23 M24 M25 M26 M27 M28
M34 M35 M36 M38 M39 M40 M42 M43 M44 M45 M48 M49 M50 M52 M53 M54 M55 M56 M58 M59 M60
-5V
+5V
I[0..95]
XA152A
GND 1
+5V 2
IWR- 4
IBHE- 5
IANEL 6
IBC_K 7
IA0 8
IA3 9
IA6 10
IA8 11
IA11 12
IA14 13
CARDADR1 14
+5V 15
GND 16
ID0 17
ID3 18
ID6 19
ID9 20
ID11 21
ID14 22
IBREQ- 23
IBUSY- 24
IREQ9- 25
IREQ12- 26
IREQ15- 27
DMAREQ0- 28
DMAACK0- 29
-5V 30
+5V 31
GND 32
I2 I3 I4 I5 I6 I7 I8 I9 I10 I11 I12 I16 I17 I18 I19 I20 I21 I22 I23 I24 I25 I26 I27 I28
I34 I35 I36 I38 I39 I40 I42 I43 I44 I48 I49 I50 I52 I53 I54 I55 I56 I58 I59 I60

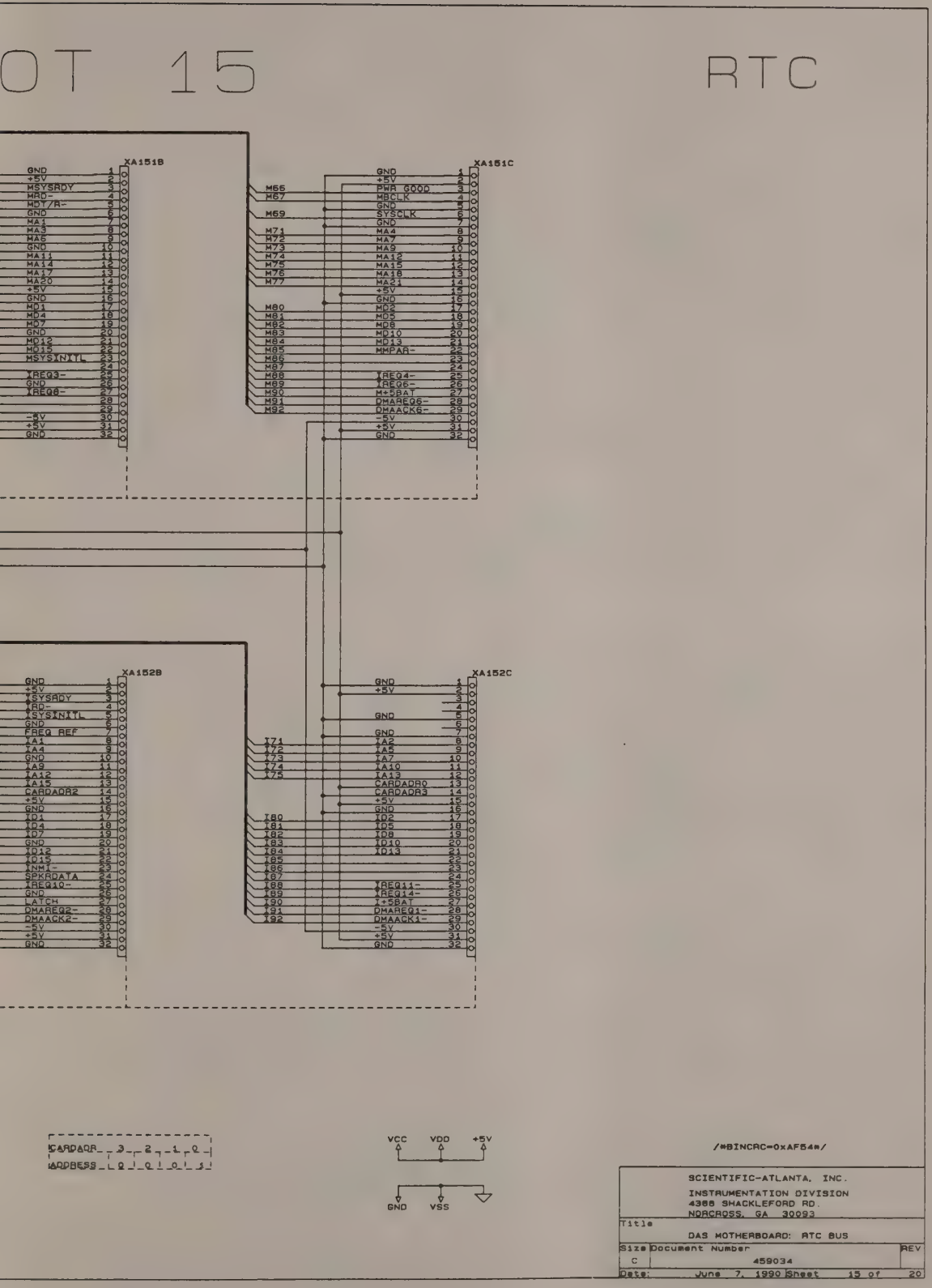
OT 15
RTC
XA151B
XA151C
XA152B
XA152C
CARDADR
ADDRESS
VCC
VDD
+5V
GND
VSS
/*BINCRC=0xAF54*/
SCIENTIFIC-ATLANTA, INC.
INSTRUMENTATION DIVISION
4386 SHACKLEFORD RD.
NORCROSS, GA 30093
Title
DAS MOTHERBOARD: RTC BUS
Size C
Document Number 459034
REV
Date: June 7, 1990 Sheet 15 of 20

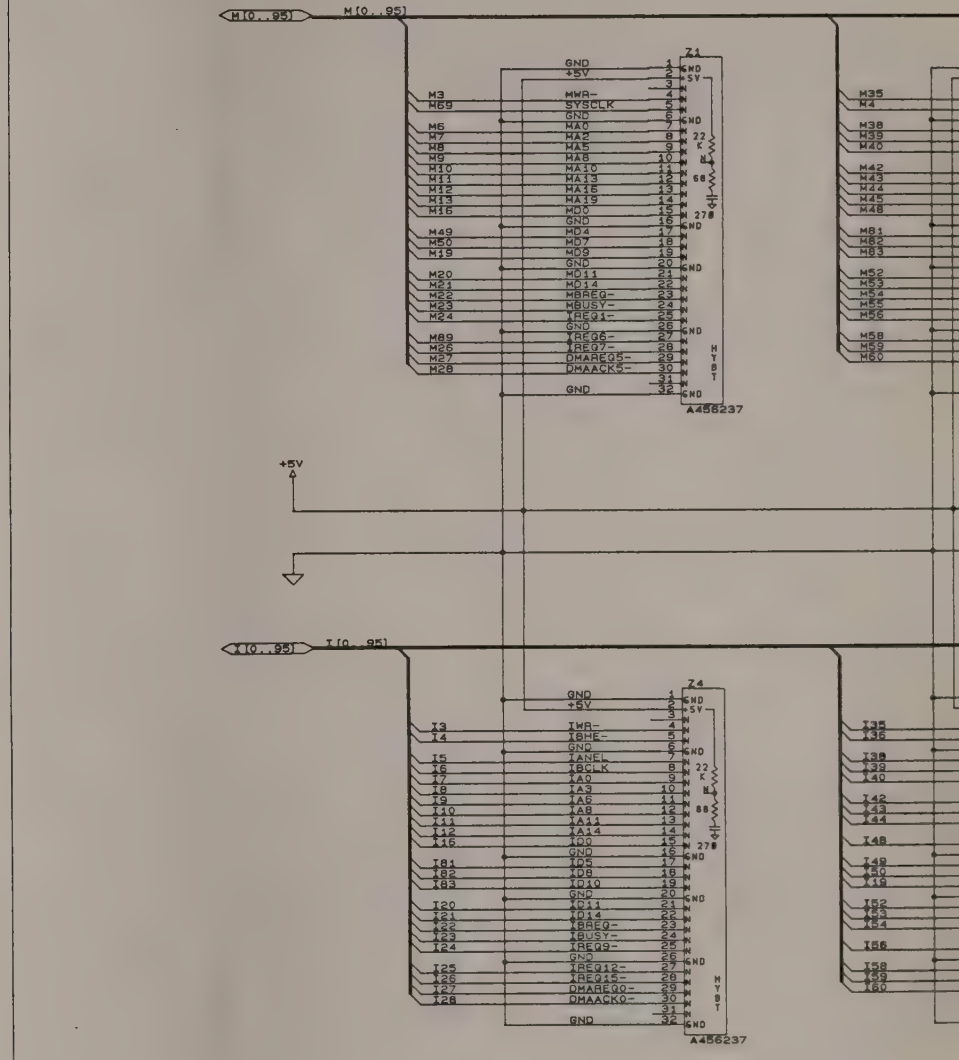
M[0..95]
M[0..95]
Z1
GND
+5V
MWR-
SYSCLK
GND
MA0
MA2
MA5
MA8
MA10
MA13
MA16
MA19
MD0
GND
MD4
MD7
MD9
GND
MD11
MD14
MBREQ-
MBUSY-
IREQ1-
GND
IREQ6-
IREQ7-
DMAREQ5-
DMAACK5-
GND
22 K
68
270
HYBT
A456237
+5V
I[0..95]
I[0..95]
Z4
GND
+5V
IWR-
IBHE-
GND
IANEL-
IBCLK
IA0
IA3
IA6
IA8
IA11
IA14
ID0
GND
ID5
ID8
ID10
GND
ID11
ID14
IBREQ-
IBUSY-
IREQ9-
GND
IREQ12-
IREQ15-
DMAREQ0-
DMAACK0-
GND
22 K
88
270
HYBT
A456237

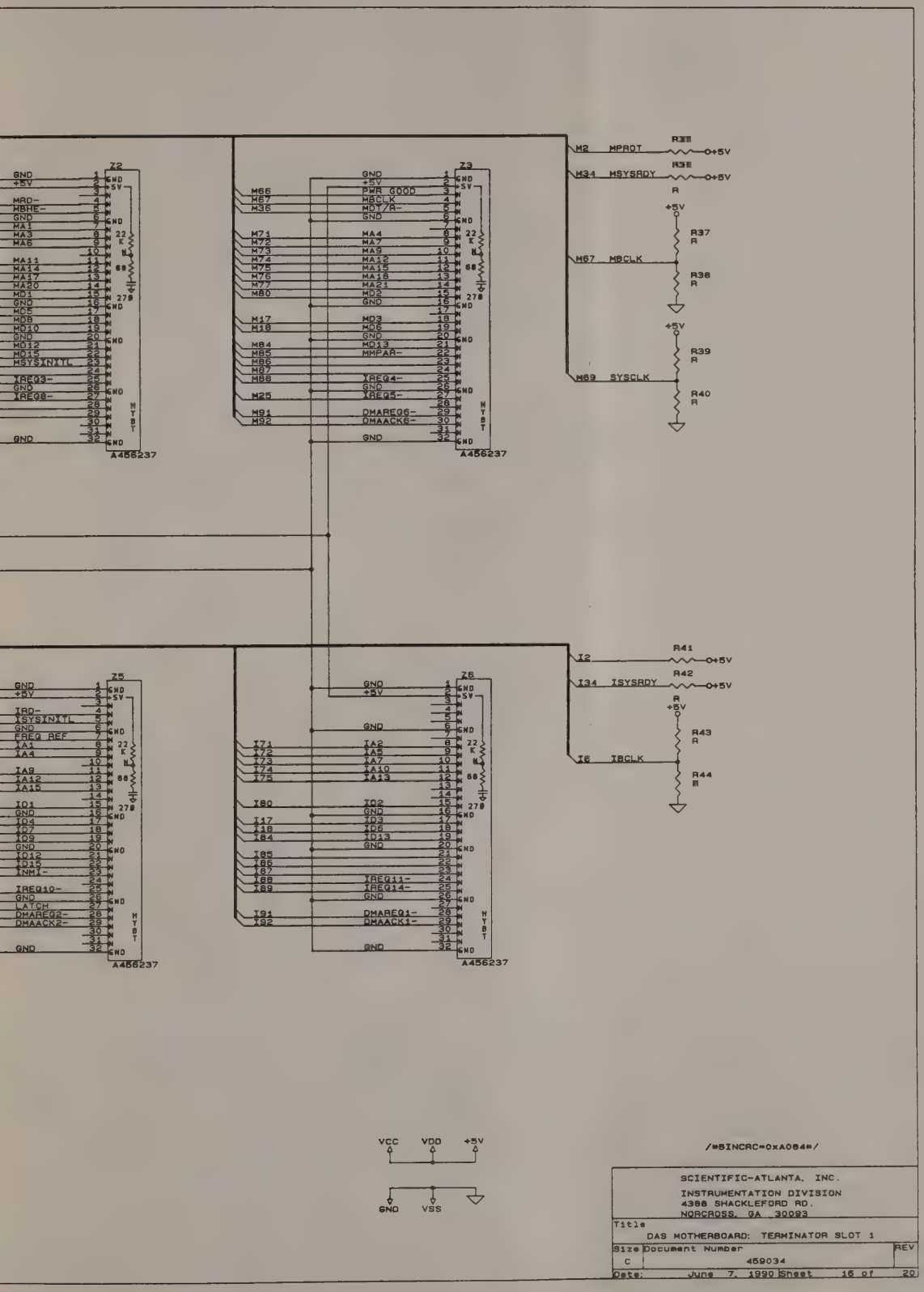
Z2
Z3
Z5
Z6
A456237
R36
R37
R38
R39
R40
R41
R42
R43
R44
M2 MPROT
M34 MSYSRDY
M67 MBCLK
M69 SYSCLK
I2
I34 ISYSRDY
I6 IBCLK
+5V
VCC VDD +5V
GND VSS
/*BINCRC=0xA084*/
SCIENTIFIC-ATLANTA, INC.
INSTRUMENTATION DIVISION
4386 SHACKLEFORD RD.
NORCROSS, GA 30093
Title
DAS MOTHERBOARD: TERMINATOR SLOT 1
Size C
Document Number 459034
REV
Date: June 7, 1990 Sheet 16 of 20

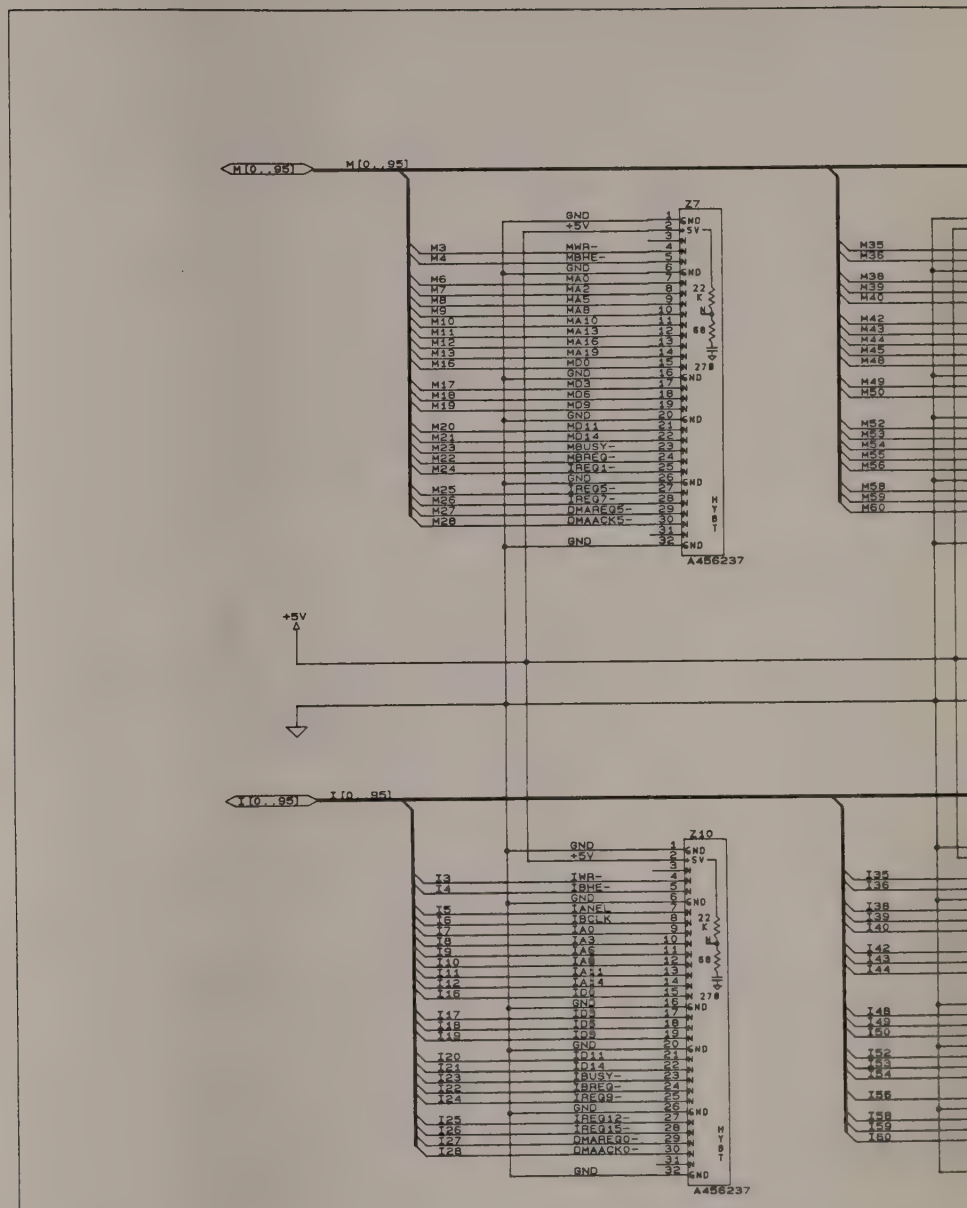
M[0..95]
Z7
GND
+5V
MWR-
MBHE-
MA0
MA2
MA5
MA8
MA10
MA13
MA16
MA19
MD0
MD3
MD6
MD9
MD11
MD14
MBUSY-
MBREQ-
IREQ1-
IREQ5-
IREQ7-
DMAREQ5-
DMAACK5-
A456237
+5V
I[0..95]
Z10
IWR-
IBHE-
IBCLK
IA0
IA3
IA5
IA8
IA11
IA14
ID0
ID3
ID6
ID9
ID11
ID14
IBUSY-
IBREQ-
IREQ9-
IREQ12-
IREQ15-
DMAREQ0-
DMAACK0-
A456237

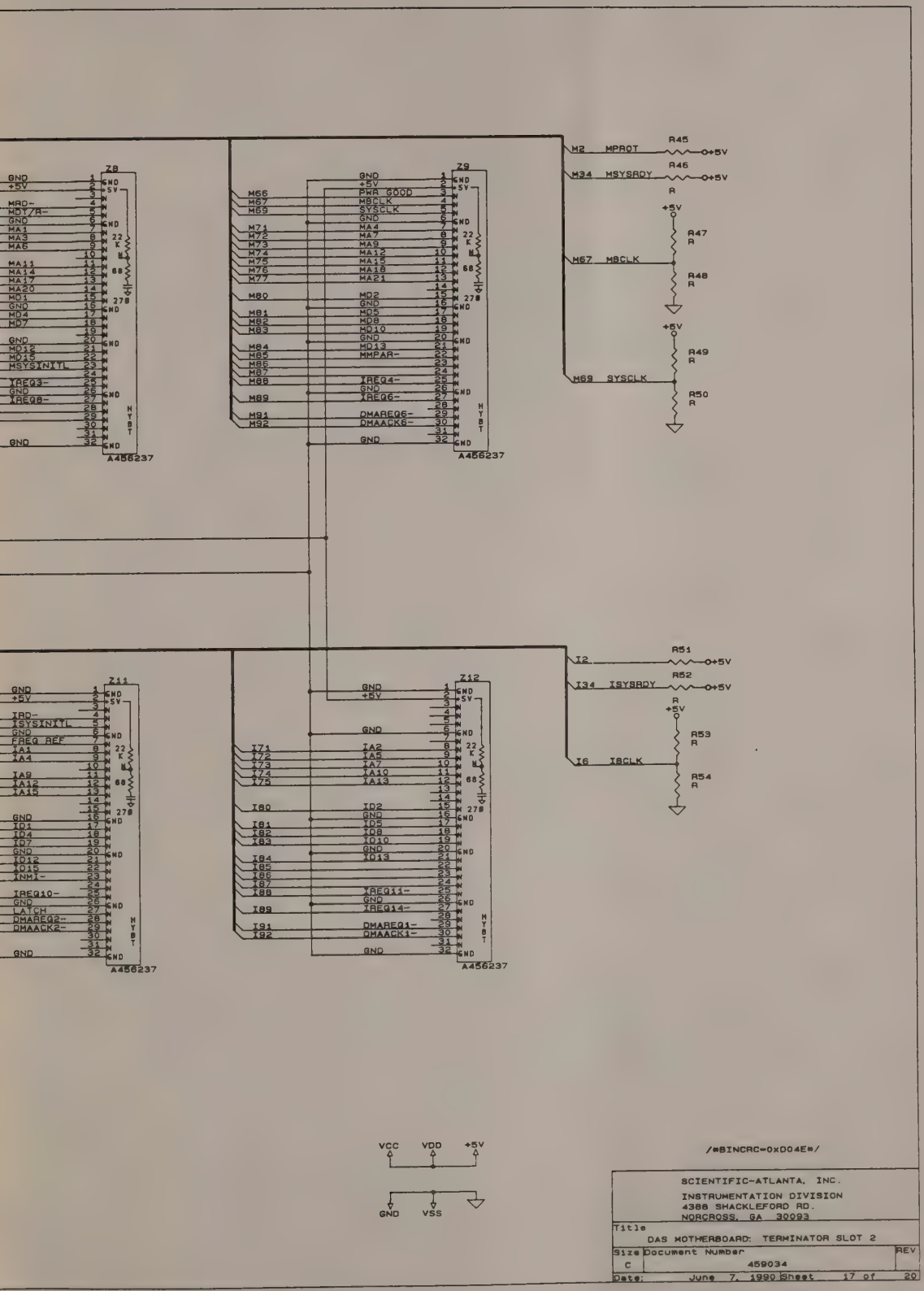
Z8
A456237
Z9
A456237
Z11
A456237
Z12
A456237
R45
R46
R47
R48
R49
R50
R51
R52
R53
R54
M2 MPROT
M34 MSYSRDY
M67 MBCLK
M69 SYSCLK
I2
I34 ISYSRDY
I6 IBCLK
+5V
GND
VCC VDD +5V
GND VSS
/*BINCRC=0xD04E*/
SCIENTIFIC-ATLANTA, INC.
INSTRUMENTATION DIVISION
4386 SHACKLEFORD RD.
NORCROSS, GA 30093
Title
DAS MOTHERBOARD: TERMINATOR SLOT 2
Size C
Document Number 459034
REV
Date: June 7, 1990 Sheet 17 of 20

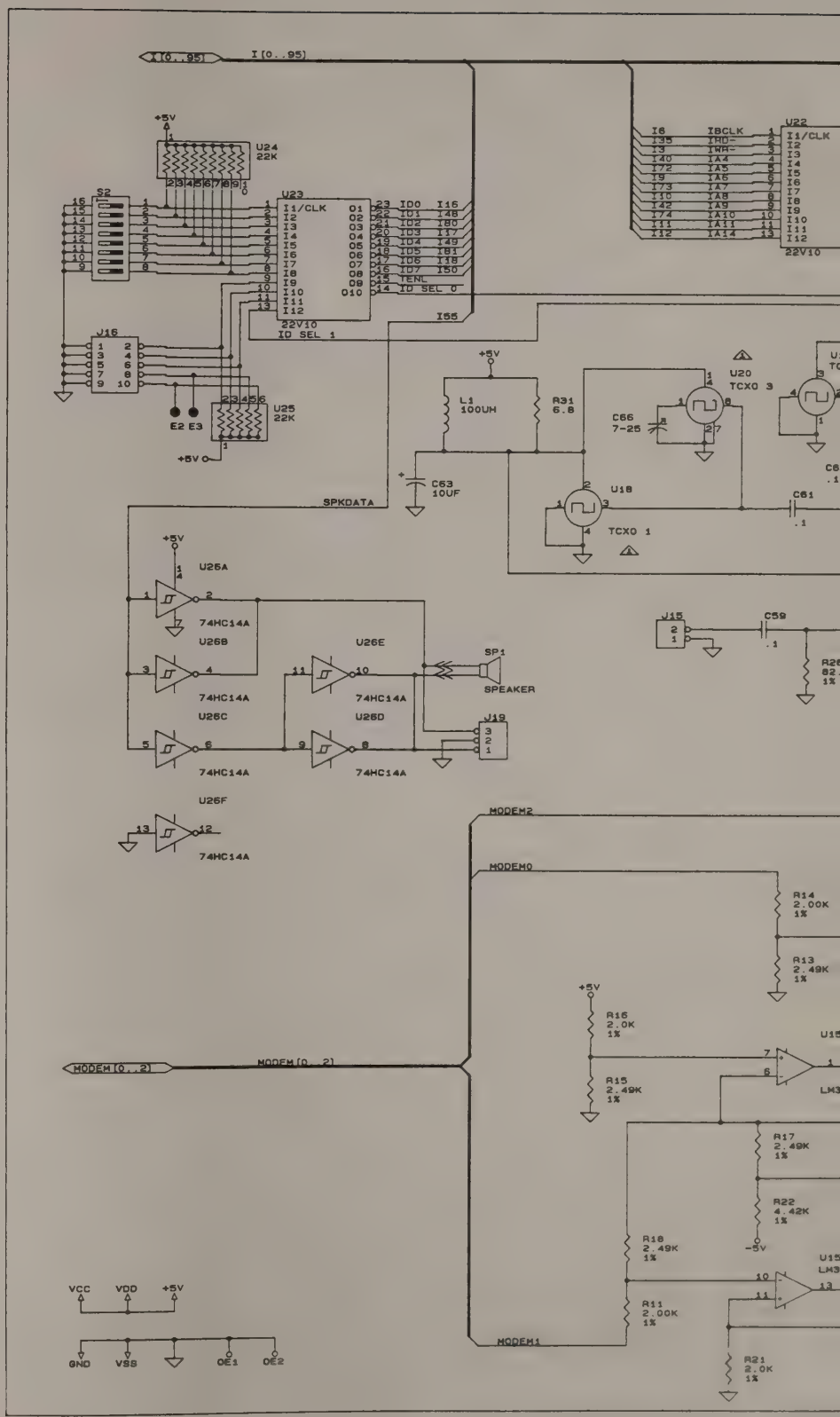
I[0..95]
+5V
U24
22K
S2
U23
I1/CLK
22V10
IO_SEL_1
I55
U22
IBCLK
22V10
U16
E2 E3
U25
22K
L1
100UH
R31
6.8
C66
7-25
U20
TCXO 3
C53
10UF
SPKDATA
U18
TCXO 1
C61
U26A
74HC14A
U26B
U26C
U26D
U26E
SP1
SPEAKER
J19
U26F
J15
C59
MODEM2
MODEM0
R14
2.00K
1%
R13
2.49K
1%
R16
2.0K
1%
R15
2.49K
1%
MODEM[0..2]
R17
2.49K
1%
R22
4.42K
1%
-5V
R18
2.49K
1%
R11
2.00K
1%
MODEM1
R21
2.0K
1%
LM3
VCC
VDD
GND
VSS
OE1
OE2

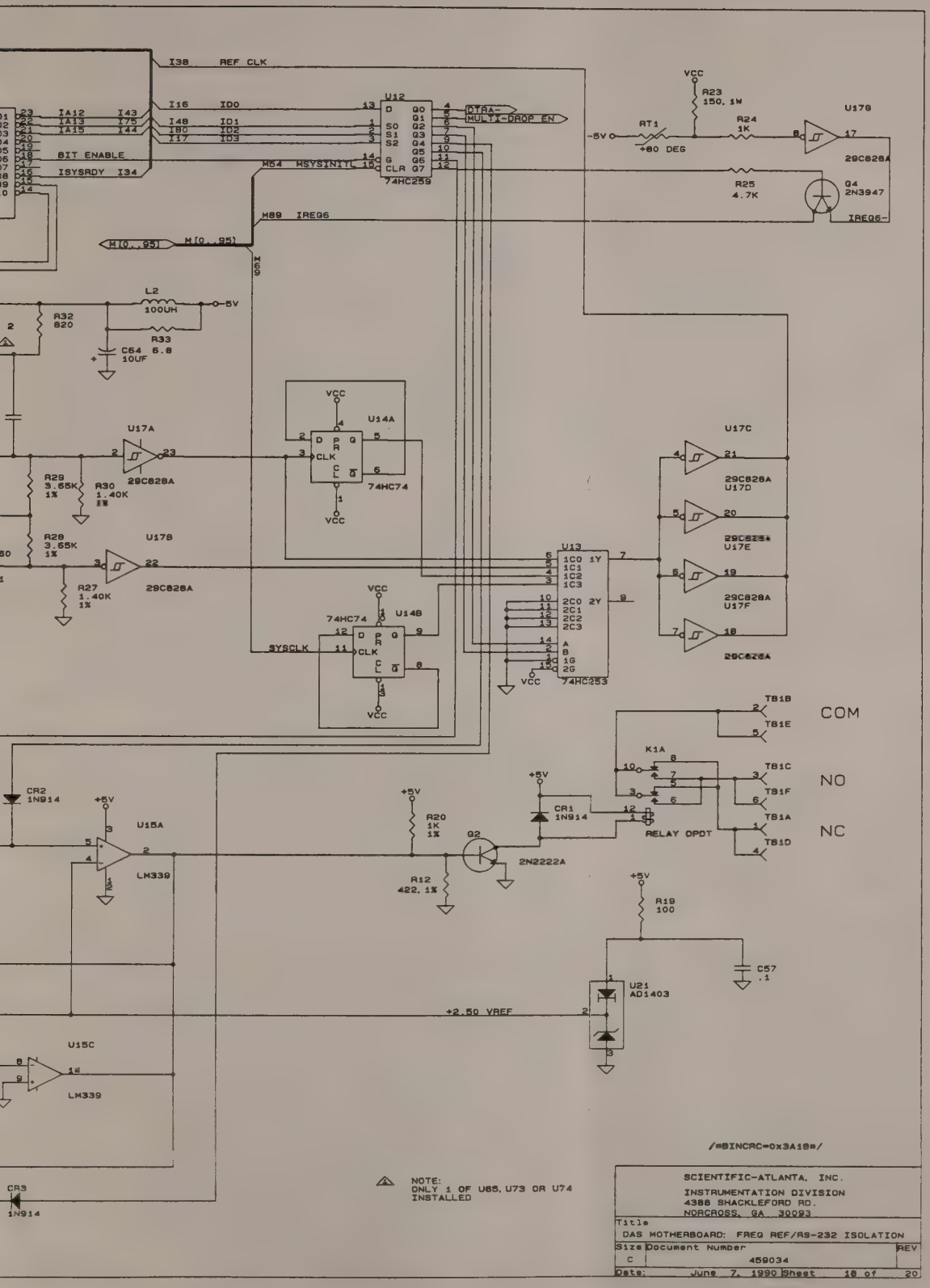
I38 REF CLK
I16 ID0
I48 ID1
I80 ID2
I17 ID3
BIT ENABLE
ISYSRDY I34
M54 MSYSINITL
M89 IREQ6
M[0..95]
U12
74HC259
DTRA-
MULTI-DROP EN
VCC
R23 150, 1W
RT1 +80 DEG
R24 1K
R25 4.7K
Q4 2N3947
IREQ6-
U17B
29C828A
L2 100UH
R32 820
R33
C64 6.8 10UF
U17A
R29 3.65K 1%
R30 1.40K 1%
R28 3.65K 1%
R27 1.40K 1%
U14A
74HC74
U14B
SYSCLK
U13
74HC253
U17C
U17D
U17E
U17F
TB1B
TB1E
TB1C
TB1F
TB1A
TB1D
COM
NO
NC
K1A
RELAY DPDT
CR1 1N914
CR2 1N914
CR3 1N914
U15A
LM339
U15C
R20 1K 1%
Q2 2N2222A
R12 422, 1%
R19 100
C57 .1
U21 AD1403
+2.50 VREF
/*BINCRC=0x3A18*/
NOTE: ONLY 1 OF U65, U73 OR U74 INSTALLED
SCIENTIFIC-ATLANTA, INC.
INSTRUMENTATION DIVISION
4386 SHACKLEFORD RD.
NORCROSS, GA 30093
Title
DAS MOTHERBOARD: FREQ REF/RS-232 ISOLATION
Size C
Document Number 459034
REV
Date: June 7, 1990 Sheet 10 of 20

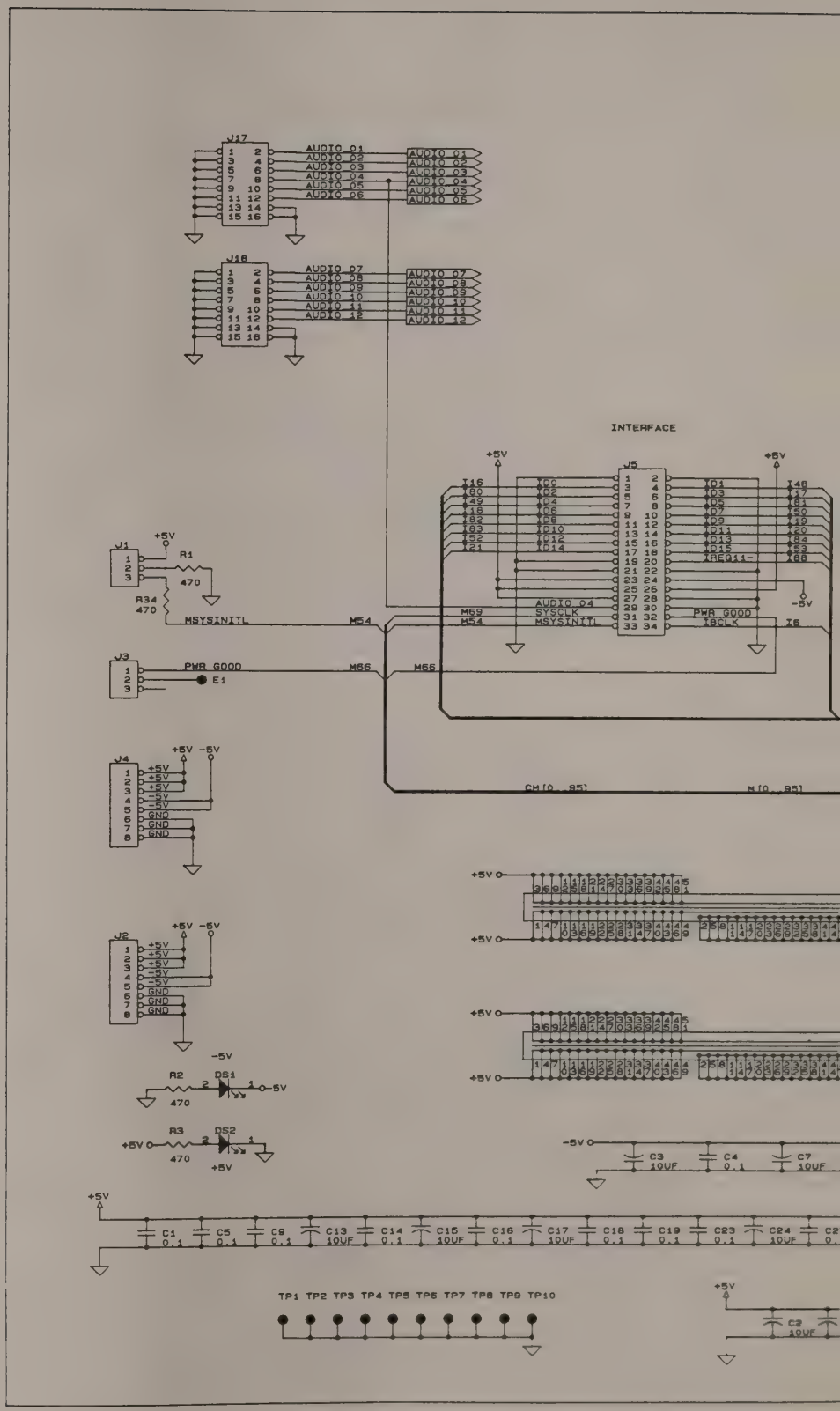
J17
AUDIO 01
AUDIO 02
AUDIO 03
AUDIO 04
AUDIO 05
AUDIO 06
J18
AUDIO 07
AUDIO 08
AUDIO 09
AUDIO 10
AUDIO 11
AUDIO 12
INTERFACE
J5
+5V
-5V
J1
R1
470
R34
470
MSYSINITL
M54
J3
PWR GOOD
M66
E1
J4
+5V
-5V
GND
J2
R2
DS1
R3
DS2
AUDIO_D4
SYSCLK
MSYSINITL
PWR GOOD
IOCLK
CH[0..95]
M[0..95]
C1
C5
C9
C13
C14
C15
C16
C17
C18
C19
C23
C24
C3
C4
C7
C8
TP1 TP2 TP3 TP4 TP5 TP6 TP7 TP8 TP9 TP10

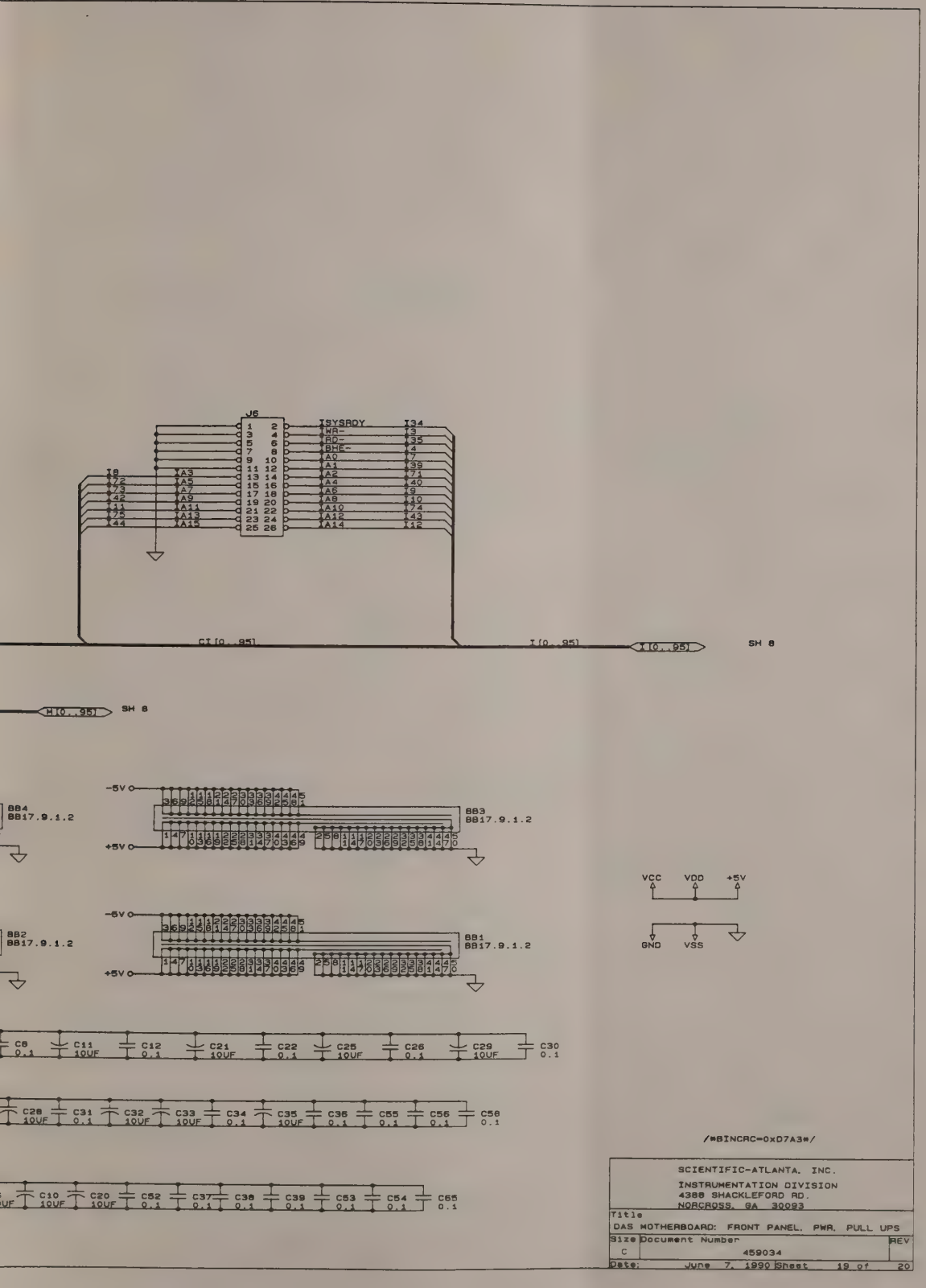
J6
ISYSRDY
WR-
RD-
BHE-
A0
A1
A2
A3
A4
A5
A6
A7
A8
A9
A10
A11
A12
A13
A14
A15
I34
I3
I35
I4
I7
I39
I71
I40
I9
I10
I74
I43
I12
I8
I75
I73
I42
I11
I76
I44
CI[0..95]
I[0..95]
I[0..95]
SH 8
H[0..95]
SH 8
-5V
+5V
BB4
BB17.9.1.2
BB3
BB17.9.1.2
BB2
BB17.9.1.2
BB1
BB17.9.1.2
VCC
VDD
+5V
GND
VSS
C8 0.1
C11 10UF
C12 0.1
C21 10UF
C22 0.1
C25 10UF
C26 0.1
C29 10UF
C30 0.1
C28 10UF
C31 0.1
C32 10UF
C33 10UF
C34 0.1
C35 10UF
C36 0.1
C55 0.1
C56 0.1
C58 0.1
C10 10UF
C20 10UF
C52 0.1
C37 0.1
C38 0.1
C39 0.1
C53 0.1
C54 0.1
C65 0.1
/*BINCRC=0xD7A3*/
SCIENTIFIC-ATLANTA, INC.
INSTRUMENTATION DIVISION
4386 SHACKLEFORD RD.
NORCROSS, GA 30093
Title
DAS MOTHERBOARD: FRONT PANEL, PWR, PULL UPS
Size
C
Document Number
459034
REV
Date: June 7, 1990 Sheet 19 of 20

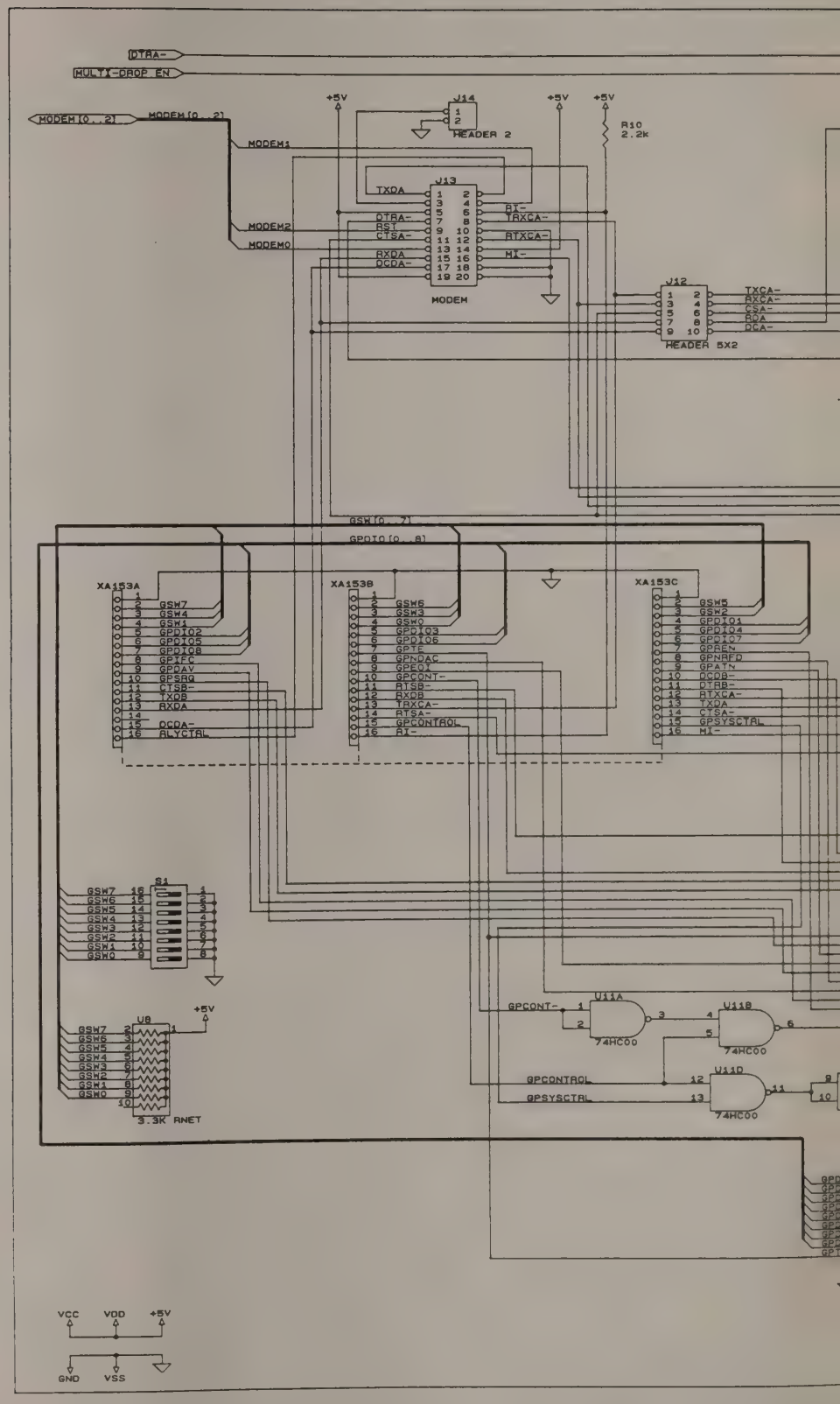
DTRA-
MULTI-DROP EN
MODEM[0..2]
MODEM1
MODEM2
MODEM0
+5V
J14
HEADER 2
R10
2.2k
J13
TXDA
DTRA-
RST
CTSA-
RXDA
DCDA-
RI-
TRXCA-
RTXCA-
MI-
MODEM
J12
TXCA-
RXCA-
CSA-
RDA
DCA-
HEADER 5X2
GSW[0..7]
GPDIO[0..8]
XA153A
XA153B
XA153C
GSW7
GSW4
GSW1
GPDIO2
GPDIO5
GPDIO8
GPIFC
GPDAV
GPSRQ
CTSB-
TXDB
RXDA
DCDA-
ALYCTRL
GSW6
GSW3
GSW0
GPDIO3
GPDIO6
GPTE
GPNDAC
GPEOI
GPCONT-
RTSB-
RXDB
TRXCA-
RTSA-
GPCONTROL
RI-
GSW5
GSW2
GPDIO1
GPDIO4
GPDIO7
GPREN
GPNRFD
GPATN
DCDB-
DTRB-
RTXCA-
TXDA
CTSA-
GPSYSCTRL
MI-
S1
U8
3.3K RNET
U11A
U11B
U11D
74HC00
GPCONT-
GPCONTROL
GPSYSCTRL
VCC
VDD
+5V
GND
VSS

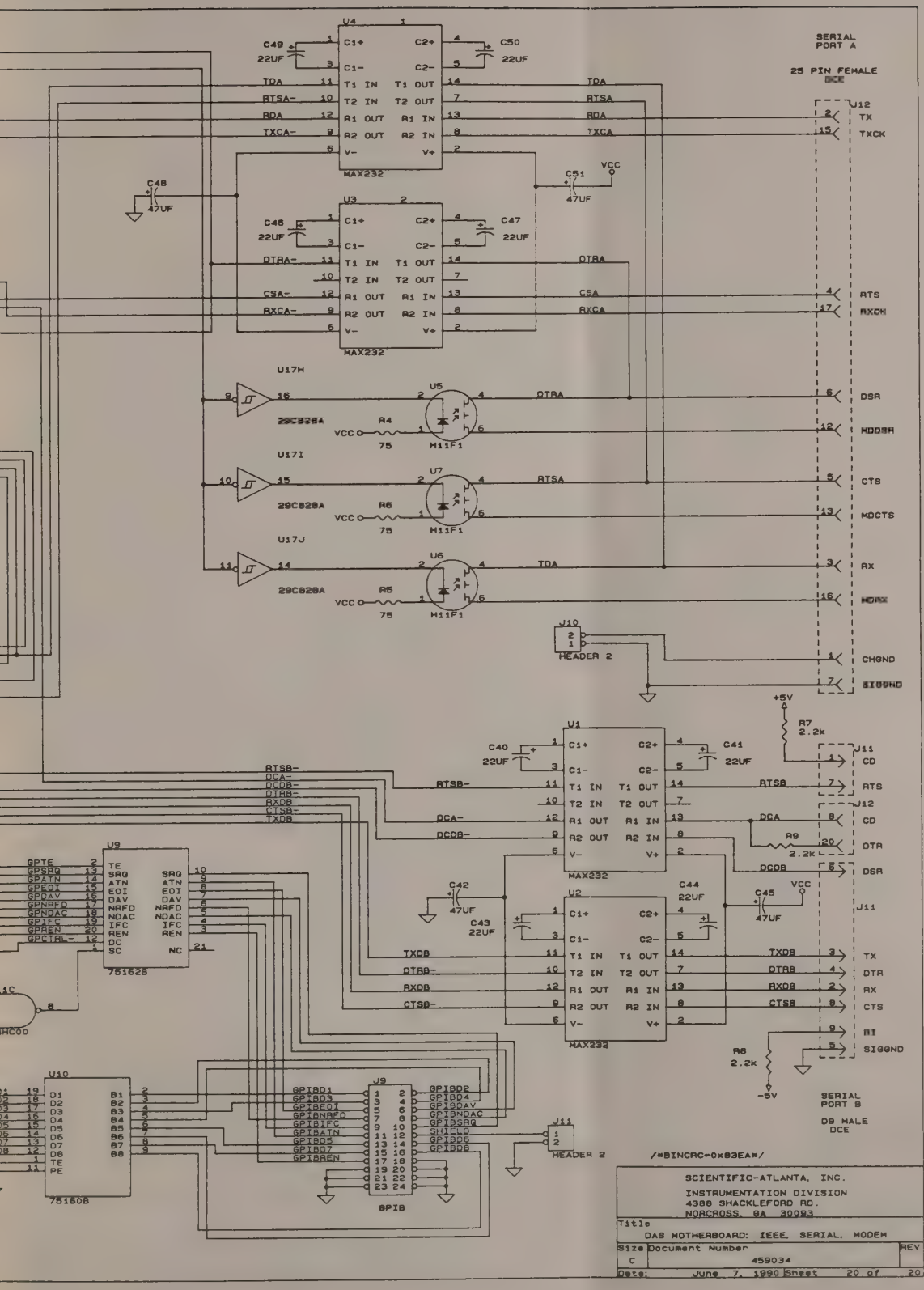
SERIAL PORT A
25 PIN FEMALE
DCE
U4
MAX232
U3
MAX232
U17H
29C828A
U17I
29C828A
U17J
29C828A
U5
U7
U6
H11F1
U1
MAX232
U2
MAX232
U9
751628
U10
751608
J9
GPIB
J10
HEADER 2
J11
HEADER 2
J12
TX
TXCK
RTS
RXCK
DSR
MODSR
CTS
MDCTS
RX
MDRX
CHGND
SIGGND
CD
RTS
CD
DTR
DSR
TX
DTR
RX
CTS
RI
SIGGND
SERIAL PORT B
D9 MALE
DCE
/*BINCRC=0x83EA*/
SCIENTIFIC-ATLANTA, INC.
INSTRUMENTATION DIVISION
4388 SHACKLEFORD RD.
NORCROSS, GA 30093
Title
DAS MOTHERBOARD: IEEE, SERIAL, MODEM
Size C
Document Number 459034
REV
Date: June 7, 1990
Sheet 20 of 20

NOTES:

1. APPLY ITEM 10 TO FRONT COVER (ITEM 7) NEAR TOP IN THE CENTER APPROX AS SHOWN.
2. INSTALL ITEM 4 UNDER U1, U2, U3.
3. STRIP AND TIN .25 EACH END OF WIRE.

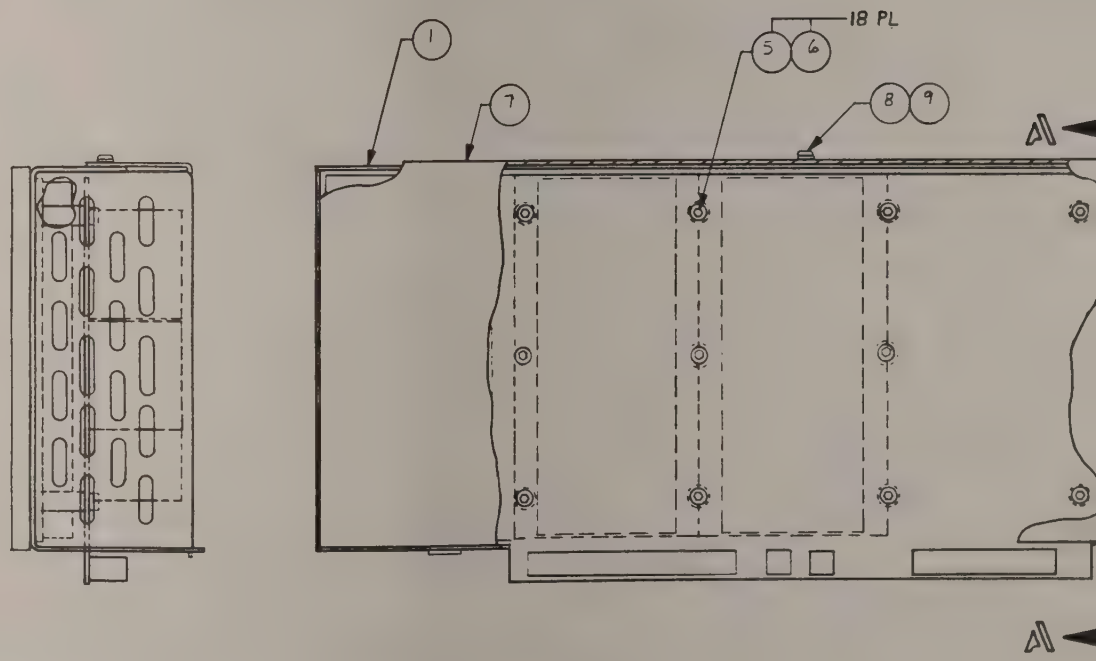

APPLICATION			DWG NO 456987	SH 1	REV -
QTY REQD	NEXT ASSY	USED ON	REVISIONS		
1	306200	AT 9000	ZONE / REV: -	DESCRIPTION: INITIAL RELEASE	DATE	APPROVED

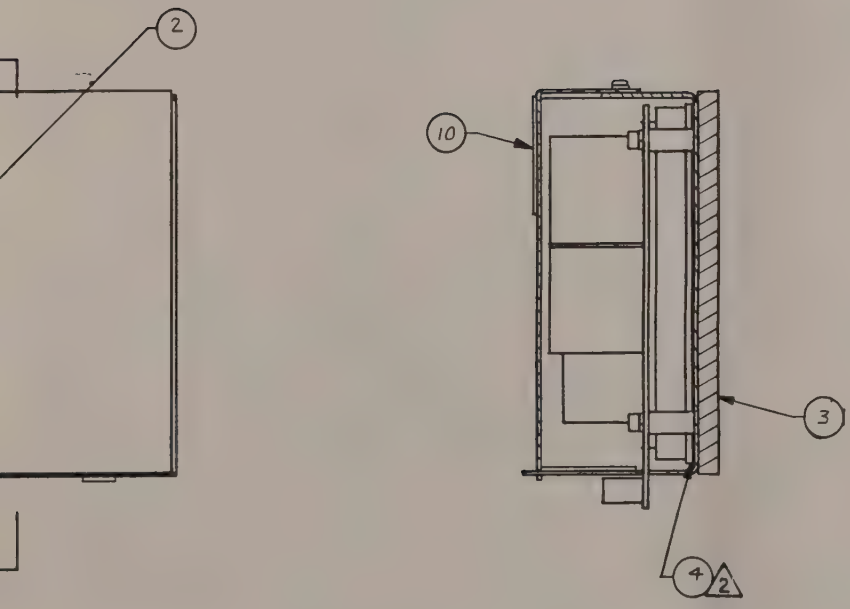

SEE SEPARATE PARTS LIST

ITEM OR FIND NO	QTY REQD	S-A STOCK NO	NOMENCLATURE OR DESCRIPTION	MATL SPEC AND SIZE OR COMPONENT VALUE	IDENTIFYING OR PART NO	FSCM

PARTS LIST

UNLESS OTHERWISE SPECIFIED ALL CAPACITORS ARE IN MICROFARADS AND ALL RESISTORS ARE IN OHMS ±10% AND 1/4 WATT

LAST REFERENCE DESIGNATION USED

C	CR	J	K
Q	R	S	U

ALL DIMENSIONS ARE IN INCHES UNLESS OTHERWISE SPECIFIED

TOLERANCES

3 PLACE DECIMAL ± .005
2 PLACE DECIMAL ± .02
1 PLACE DECIMAL ± 1

FRACTIONS ± ANGLES ±0° 30'

MAX SURFACE ROUGHNESS 125 ALL MACHINED SURFACES EXCEPT AS NOTED

BREAK SHARP EDGES AND CORNERS .010 MAX

FINISH NONE

CONTRACT NO

DRN	[illegible]	7-89
ENGR	[illegible]	7-90
CHK	[illegible]	7-90
PROD	[illegible]	7-90
APVD	[illegible]	
APVD		

Scientific-Atlanta 3845 Pleasantdale Road Atlanta, Georgia 30340

POWER SUPPLY ASSY

AC DAS

SIZE	FSCM NO	DWG NO	REV
D	10110	456787	-

SCALE 9/1 SHEET 1 OF 2

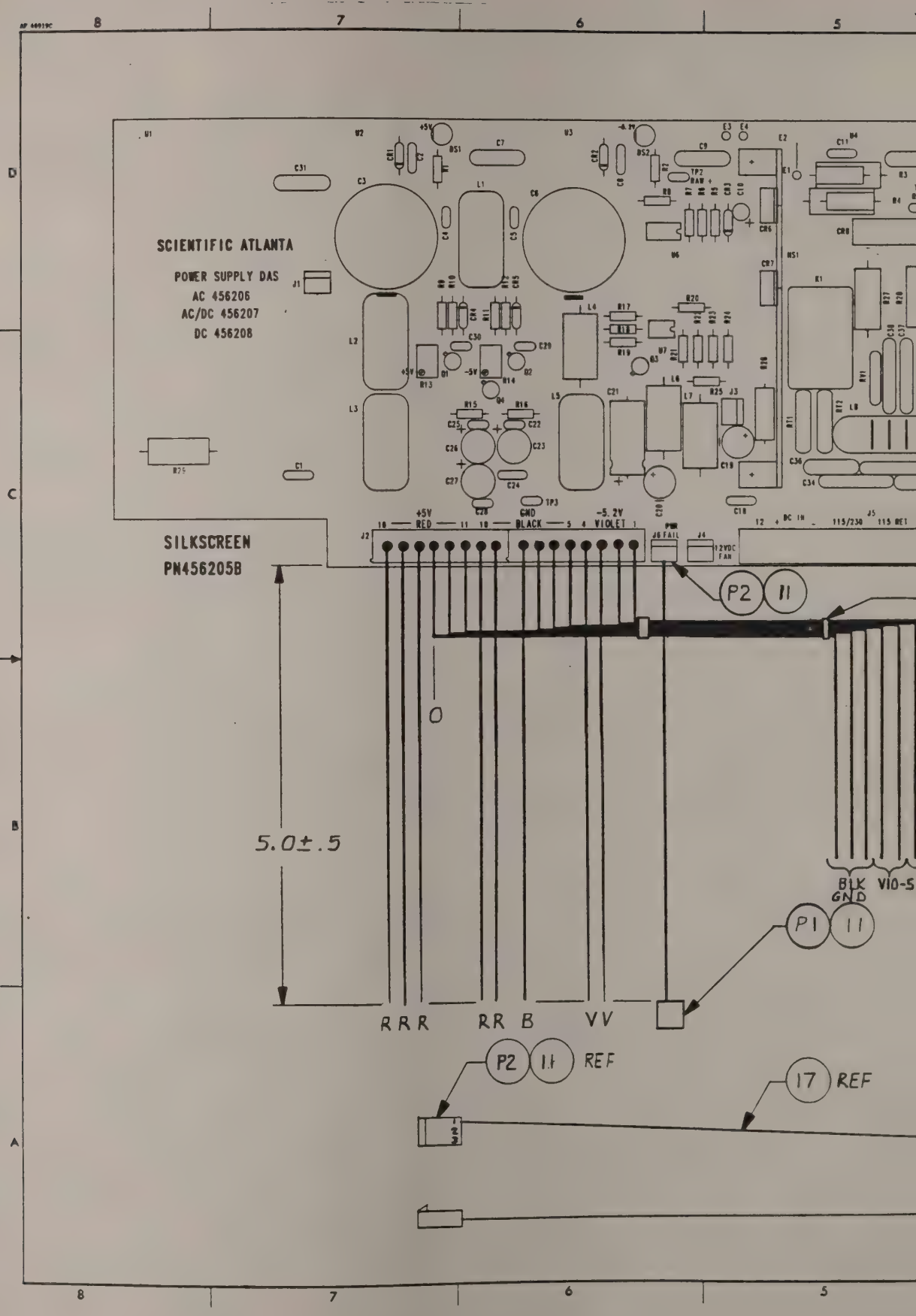
SCIENTIFIC ATLANTA
POWER SUPPLY DAS
AC 456206
AC/DC 456207
DC 456208
SILKSCREEN
PN456205B
5.0±.5
P2 11
P1 11
P2 11 REF
17 REF
RRR RR B VV
BLK GND
VIO-5
+5V RED
GND BLACK
-5.2V VIOLET
PWR FAIL
12VDC FAN
DC IN
115/230
115 RET

DWG NO 456987 REV 2

APPLICATION			REVISIONS				
QTY REQD	NEXT ASSY	USED ON	ZONE	REV		DATE	APPROVED
1	306200	AT9000					

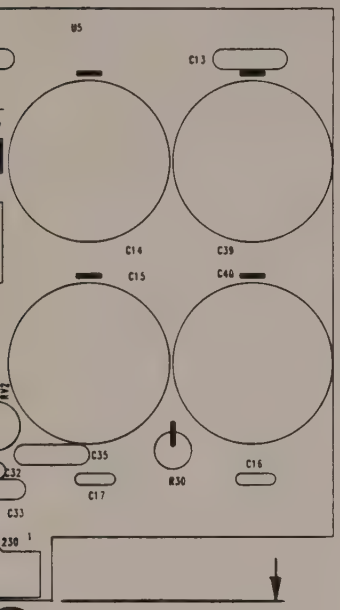

(13) 2PL

..50 ±.25

2.75 ±.25

10±5

6.0

P1 11 REF

△3

WIRE LIST

CONN	PIN NO.	LENGTH	COLOR	ITEM NO.	GAUGE
J2	1	7.00	VIOLET	(15)	16
J2	2	7.00	VIOLET	(15)	16
J2	3	5.00	VIOLET	(15)	16
J2	4	5.00	VIOLET	(15)	16
J2	5	7.00	BLACK	(14)	16
J2	6	7.00	BLACK	(14)	16
J2	7	7.00	BLACK	(14)	16
J2	8	5.00	BLACK	(14)	16
J2	9	5.00	BLACK	(14)	16
J2	10	5.00	BLACK	(14)	16
J2	11	9.00	RED	(16)	16
J2	12	9.00	RED	(16)	16
J2	13	9.00	RED	(16)	16
J2	14	5.00	RED	(16)	16
J2	15	5.00	RED	(16)	16
J2	16	5.00	RED	(16)	16
P1 P2	1	5.00	WHITE	(17)	22

PARTS LIST

ITEM OR FIND NO	QTY REQD	S-A STOCK NO	NOMENCLATURE OR DESCRIPTION	MATL SPEC AND SIZE OR COMPONENT VALUE	IDENTIFYING OR PART NO	FSCM NO

UNLESS OTHERWISE SPECIFIED ALL CAPACITORS ARE IN MICRO-FARADS AND ALL RESISTORS ARE IN OHMS, ±10% AND 1/4 WATT

LAST REFERENCE DESIGNATION USED

C	CR	J	K
Q	R	S	U

ALL DIMENSIONS ARE IN INCHES UNLESS OTHERWISE SPECIFIED

TOLERANCES

2 PLACE DECIMAL ± .005
2 PLACE DECIMAL ± .02
1 PLACE DECIMAL ± 1

FRACTIONS ± ANGLES ±0° 30'

MAX SURFACE ROUGHNESS 125 ALL MACHINED SURFACES EXCEPT AS NOTED

BREAK SHARP EDGES AND CORNERS .010 MAX

FINISH NONE

CONTRACT NO

DWN 5-15-90

ENGR

CHK

PROD

APVD

APVD

Scientific-Atlanta P.O. Box 105027 Atlanta Georgia 30348

SIZE D FSCM NO 10110 DWG NO 456987 REV

SCALE VI SHEET 2

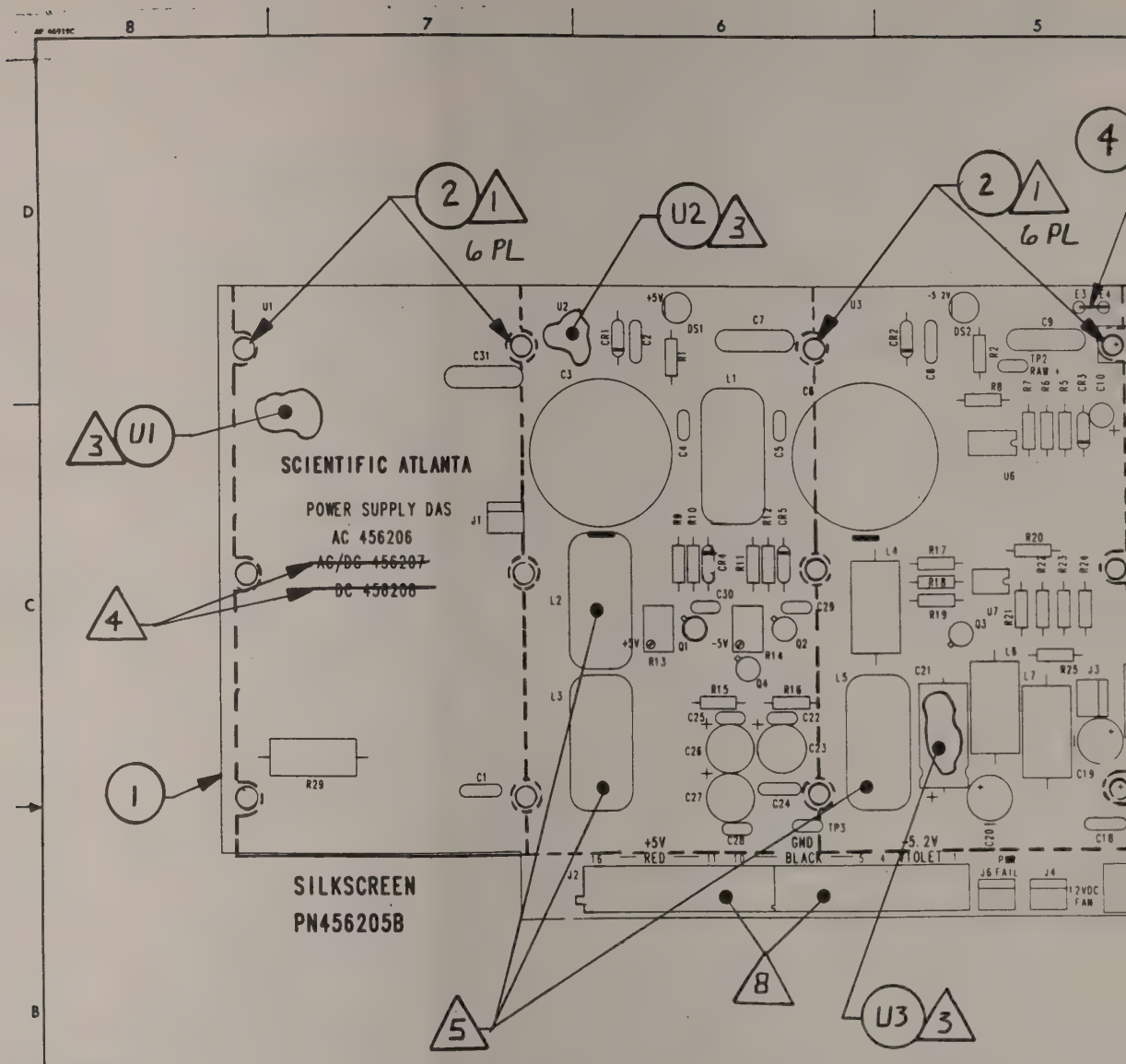

NOTES:

1. AFTER WAVE SOLDER INSTALL ITEM 2 AND ITEM 3 FARSIDE.
2. AFTER WAVE SOLDER AND CLEANING PWB INSTALL RT2. DO NOT ALLOW CLEANING FLUID OR VAPOR TO CONTACT THE BODY OF RT2.
3. IF FREON IS USED FOR CLEANING; INSTALL RT2 AFTER WAVE SOLDER AND CLEANING PROCESS. DO NOT ALLOW CLEANING FLUID OR VAPOR TO CONTACT THE BODY OF RT2.
4. WITH A PERMANENT INK MARKER MARK THRU "AC/DC 456207, DC 456208."
5. INSTALL L2, L3, AND L5 AS SHOWN IN FIG. 1 WHICH BEST ALIGNS THESE ITEMS WITH SILK-SCREEN OUTLINE.
6. INSTALL RT2, RV1 IN HOLES WHICH BEST ALIGNS IT WITH THE SILK-SCREEN.
7. INSTALL L8 LEADS SO WIRE COLOR PAIRS ARE MATCHED ON EITHER SIDE OF PART. SEE FIGURE 2.
8. CONNECT J2 TOGETHER AND INSTALL AS SHOWN ON PWB.

DWG NO 456206 SH 1 REV

APPLICATION		
QTY REQD	NEXT ASSY	USED ON
1	456987	AT9000

REVISIONS

ZONE	REV		DATE	APPROVED

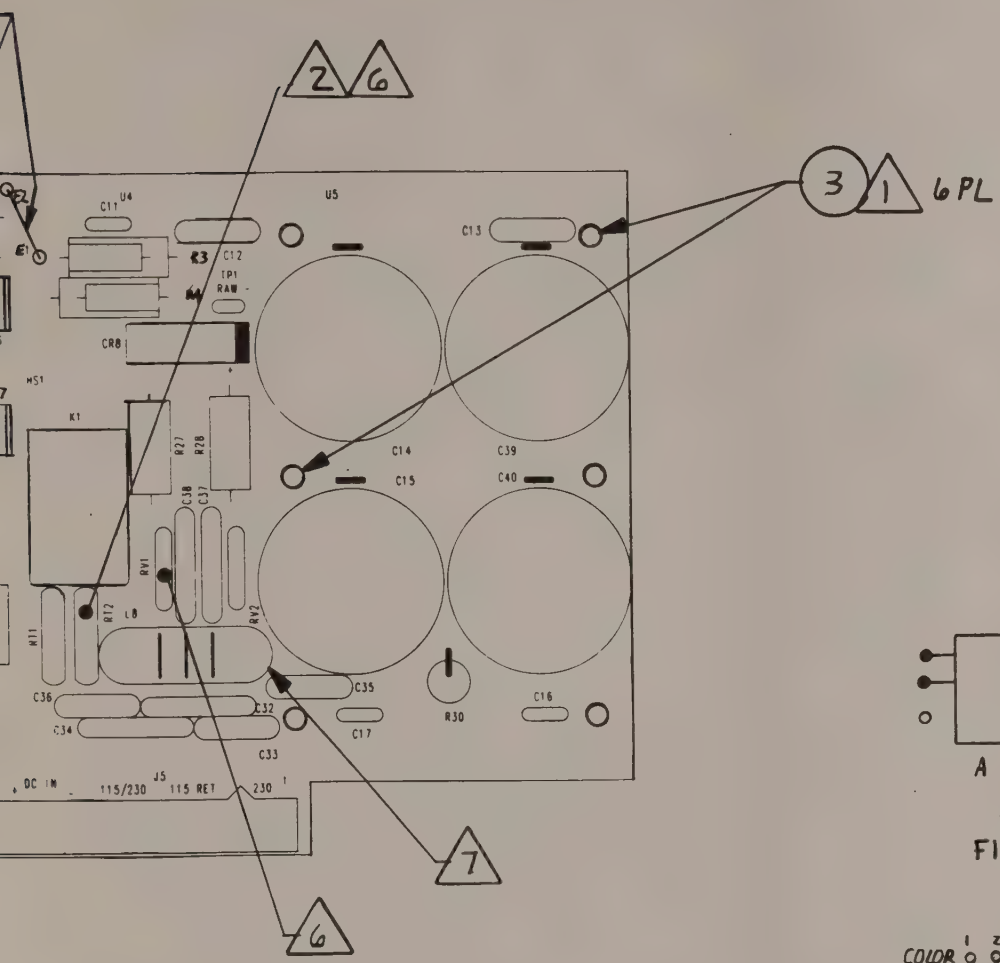

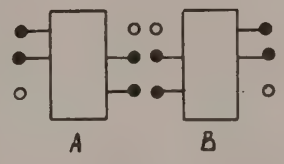

FIGURE 1

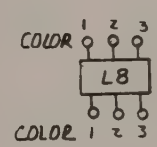

FIGURE 2

SEE SEPARATE PARTS LIST

ITEM OR FIND NO	QTY REQD	S-A STOCK NO	NOMENCLATURE OR DESCRIPTION	MATL SPEC AND SIZE OR COMPONENT VALUE	IDENTIFYING OR PART NO	FSCM NO

PARTS LIST

UNLESS OTHERWISE SPECIFIED ALL CAPACITORS ARE IN MICROFARADS AND ALL RESISTORS ARE IN OHMS, ±10% AND 1/4 WATT

LAST REFERENCE DESIGNATION USED

C CR J K
Q R S U

ALL DIMENSIONS ARE IN INCHES UNLESS OTHERWISE SPECIFIED

TOLERANCES
3 PLACE DECIMAL ± .005
2 PLACE DECIMAL ± .02
1 PLACE DECIMAL ± .1

FRACTIONS ± ANGLES ±0° 30'

MAX SURFACE ROUGHNESS 125
ALL MACHINED SURFACES EXCEPT AS NOTED

BREAK SHARP EDGES AND CORNERS .010 MAX

FINISH NONE

CONTRACT		
DFN	[signature]	5-4-90
ENGR	[signature]	5-29-90
CHK	[signature]	5-29-90
PROJ	[signature]	5/31/90
APVD	[signature]	
APVD		

Scientific-Atlanta
P.O. Box 105027
Atlanta, Georgia 30348

ASSY PWB POWER SUPPLY
AC DAS

SIZE	FSCM NO	DWG NO	REV
D	10110	456206	

SCALE 1/1 SHEET 1 OF 1

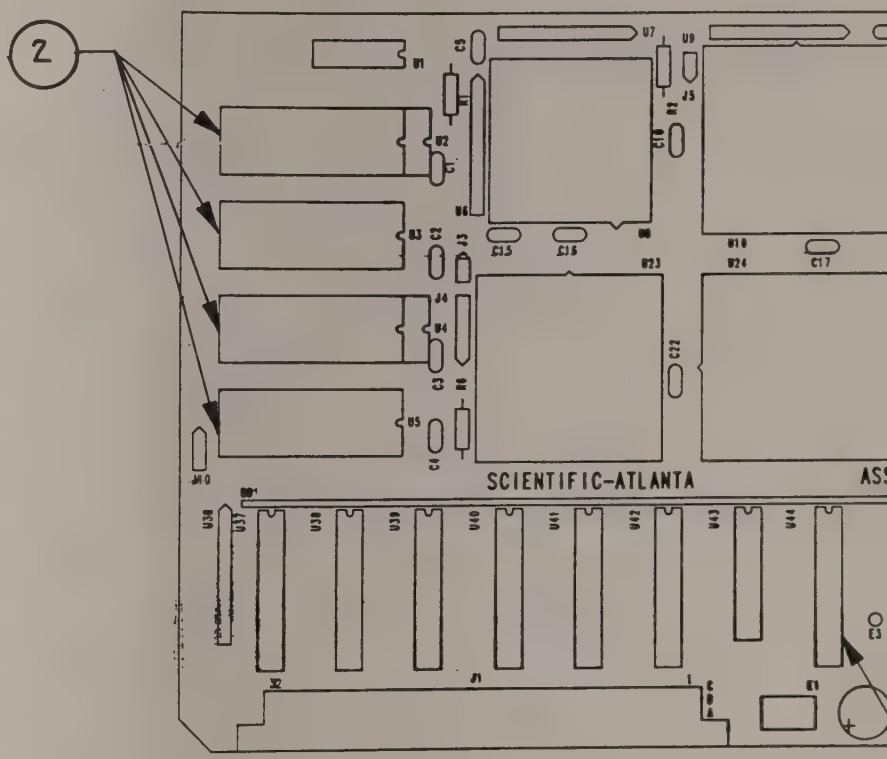
2
SCIENTIFIC-ATLANTA

DWG NO 459041 | SH 1 | REV D

APPLICATION		
QTY REQD	NEXT ASSY	USED ON
		AT9000

REVISIONS				
ZONE	REV	DESCRIPTION	DATE	APPROVED
	A	INC ECR'S 12908 AND 12931.	5/31/91	
	B	INC ECR 15029. ECO to 10-91	6/28/91	
	C	INC ECO 15248	1/21/92	
	D	INC ECO 15336	1/21/92	

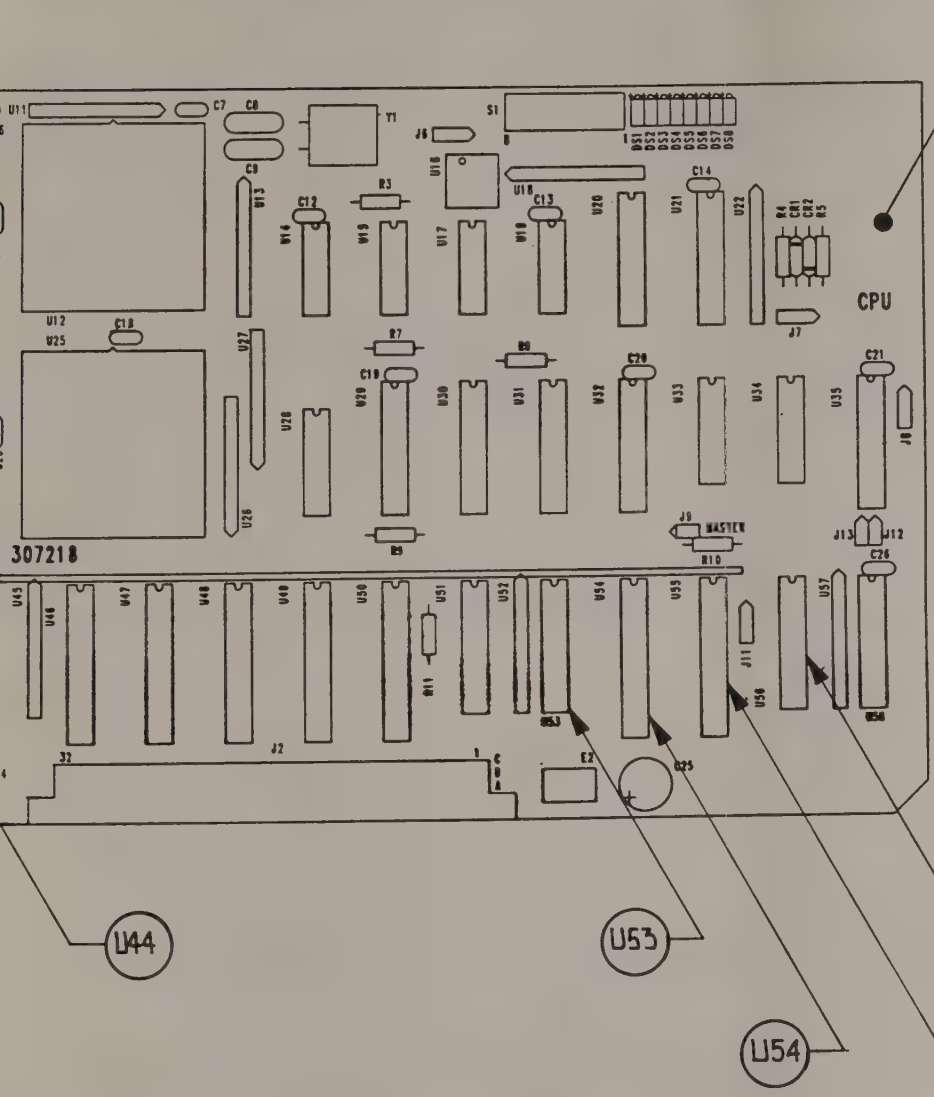

SEE SEPARATE PARTS LIST

ITEM OR FIND NO	QTY REQD	S-A STOCK NO	NOMENCLATURE OR DESCRIPTION	MATL SPEC AND SIZE OR COMPONENT VALUE	IDENTIFYING OR PART NO	FSCM NO

PARTS LIST

UNLESS OTHERWISE SPECIFIED ALL CAPACITORS ARE IN MICRO-FARADS AND ALL RESISTORS ARE IN OHMS, ±10% AND 1/4 WATT

LAST REFERENCE DESIGNATION USED

C	CR	J	K
Q	R	S	U

ALL DIMENSIONS ARE IN INCHES UNLESS OTHERWISE SPECIFIED

TOLERANCES

3 PLACE DECIMAL ±.005
2 PLACE DECIMAL ±.02
1 PLACE DECIMAL ±.1

FRACTIONS ± ANGLES ±0° 30'

MAX SURFACE ROUGHNESS 125 ALL MACHINED SURFACES EXCEPT AS NOTED

BREAK SHARP EDGES AND CORNERS .010 MAX

FINISH NONE

CONTRACT NO.

DWN	Randy Walthrop	5-20-91
ENGR	S. Hopper	5-29-91
CHK	Spencer Carter	5-29-91
PROJ	T. Murphy	5-29-91
APVL		
APVL		

Scientific-Atlanta 3845 Pleasantdale Road Atlanta, Georgia 30340

PWB ASSEMBLY
CPU DAS

SIZE	FSCM NO	DWG NO	REV
D	10110	459041	D

SCALE 1:1 SHEET 1 OF 1

NOTES:

1. INSTALL THESE ITEMS ON NEXT ASSEMBLY U2, U3, U4, U5, U44, U53, U54, U55, U56.
2. AFTER WAVE SOLDER INSTALL U8, U10, U12, U20, U21, U23, U24, U25, U29, U30, U31, U32, U35, U37, U38, U39, U40, U41, U42, U43, U46, U47, U48, U49, U50, U51, U53, U58, AND ITEM 2.
3. NOTE LOCATION OF PIN 1 ON XU8, XU10, XU12, XU23, XU24, XU25.
4. INSTALL P9 ON J9 ON PIN 1 AND PIN 2 AS DENOTED BY SHADED AREA.
5. REMOVED

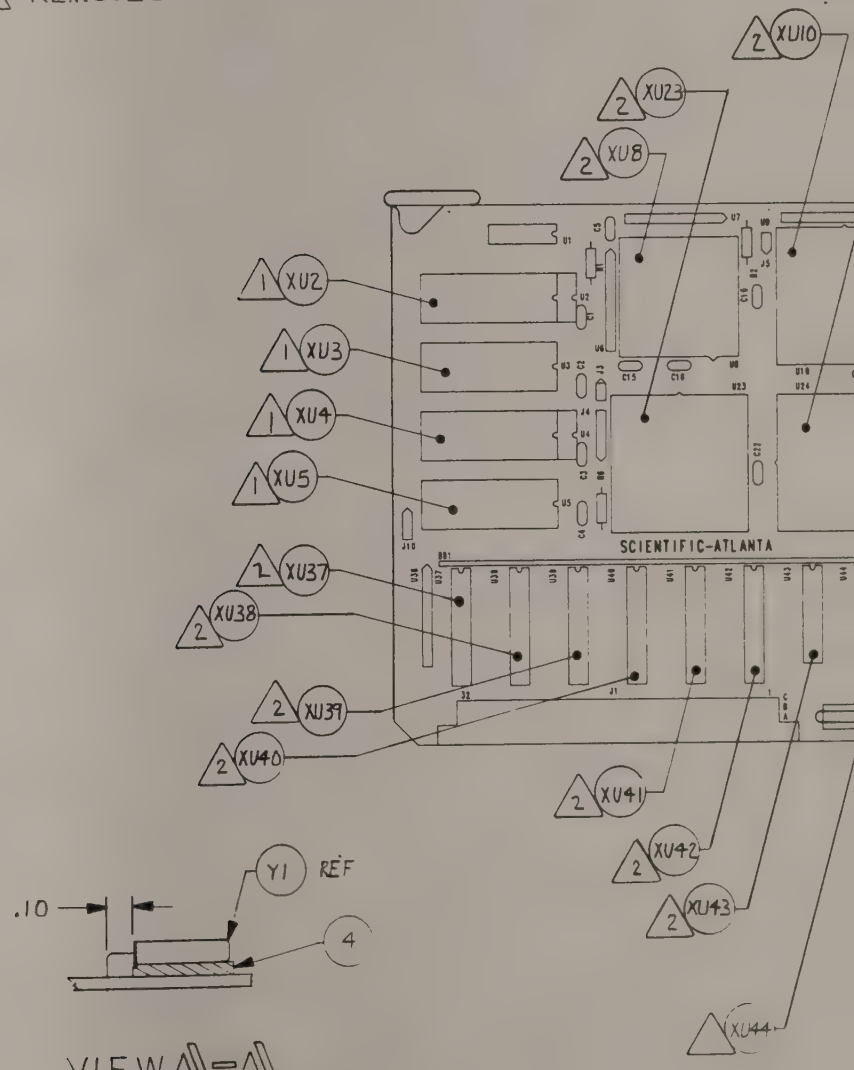

VIEW A1-A1
SCALE: NONE

APPLICATION		
QTY	NEXT ASSY	USED ON
1	307219	AT9500

REV	DESCRIPTION	APPROVAL	DATE
A	ECO 10686		9-15-87
B	ECO 11087, 11003		
C	EC --		
D	INC ECN 13094 F6-5-91		6/25/91

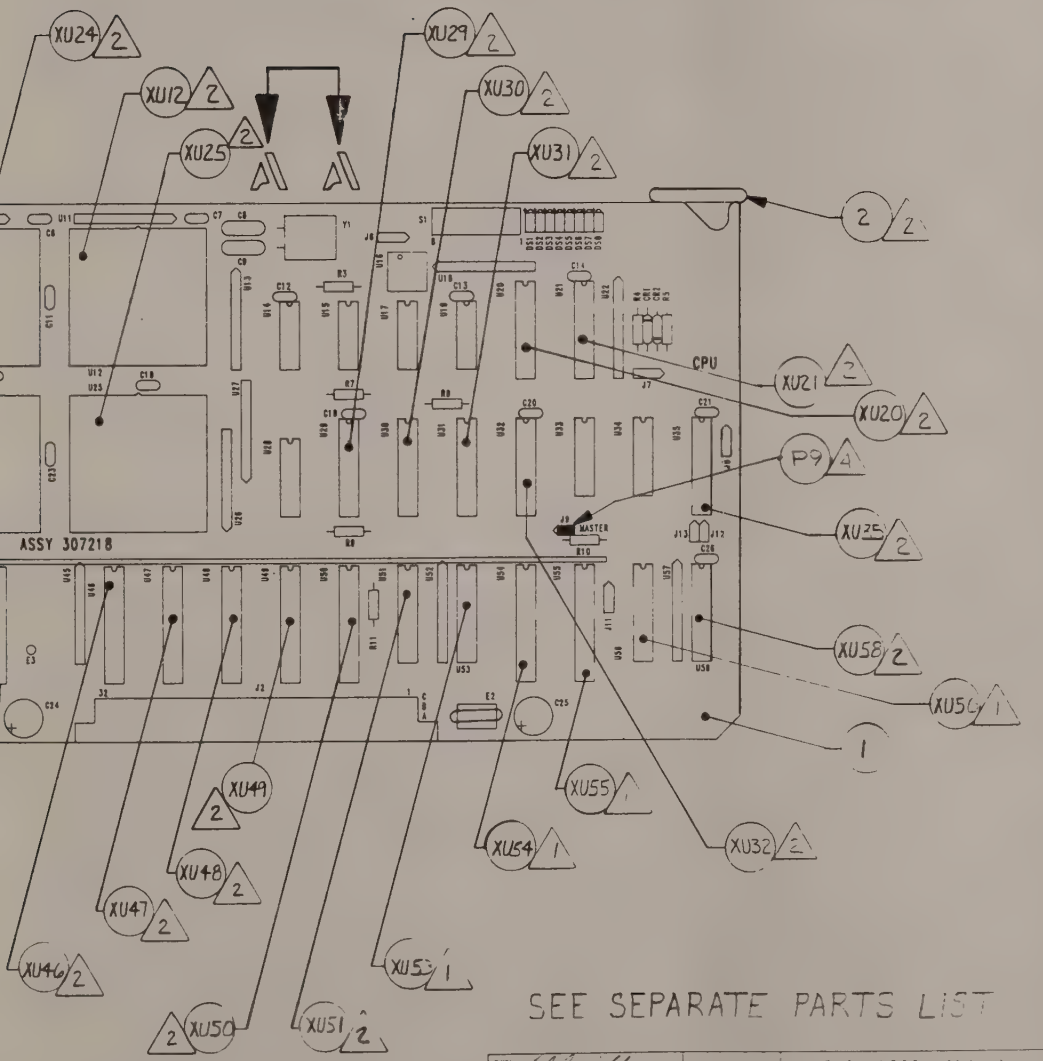

SEE SEPARATE PARTS LIST

DWN Ed Smith	7-31-90	Scientific Atlanta	
ENGR SAM LOGSTON	8-13-90	P.O. BOX 105027 ATLANTA, GA 30348	
CHK ALICE CHEA	8-11-90	PWB SUB ASSEMBLY - CPU	
PROD W JOHANNBOCK	8-13-90		
APVD B. SPRINKLE	FSCM NO. 10110	SCALE 1/1 SHEET 1 OF 1	DWG NO 307218 REV D
SOURCE			

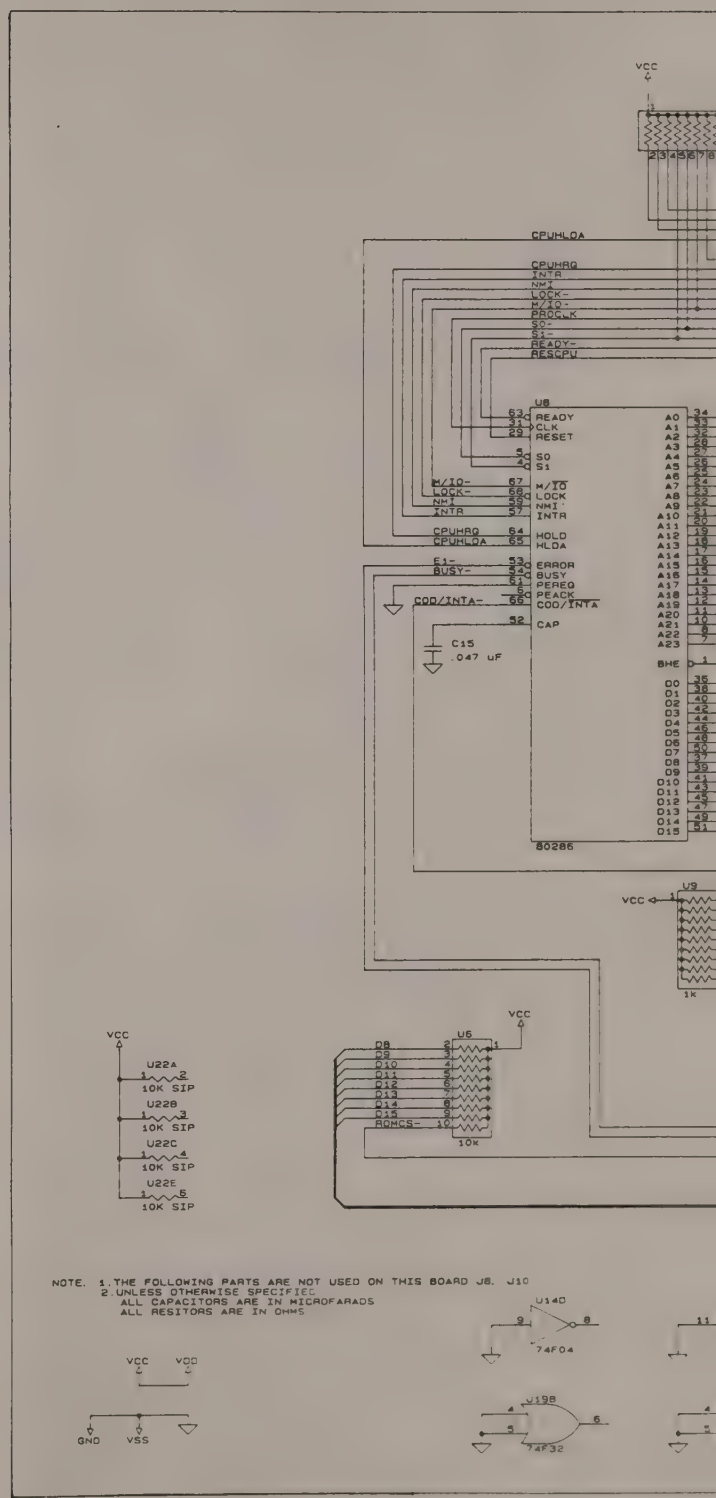
VCC
CPUHLDA
CPUHRQ
INTA
NMI
LOCK-
M/IO-
PROCLK
SO-
S1-
READY-
RESCPU
U8
READY
CLK
RESET
S0
S1
M/IO-
LOCK-
NMI
INTR
CPUHRQ
CPUHLDA
E1-
BUSY-
COD/INTA-
CAP
C15
.047 uF
80286
U9
1k
U6
D8
D9
D10
D11
D12
D13
D14
D15
ROMCS-
10k
U22A
10K SIP
U22B
10K SIP
U22C
10K SIP
U22E
10K SIP
NOTE. 1. THE FOLLOWING PARTS ARE NOT USED ON THIS BOARD J8. J10
2. UNLESS OTHERWISE SPECIFIED
ALL CAPACITORS ARE IN MICROFARADS
ALL RESITORS ARE IN OHMS
U14D
74F04
U19B
74F32
VCC
VDD
GND
VSS

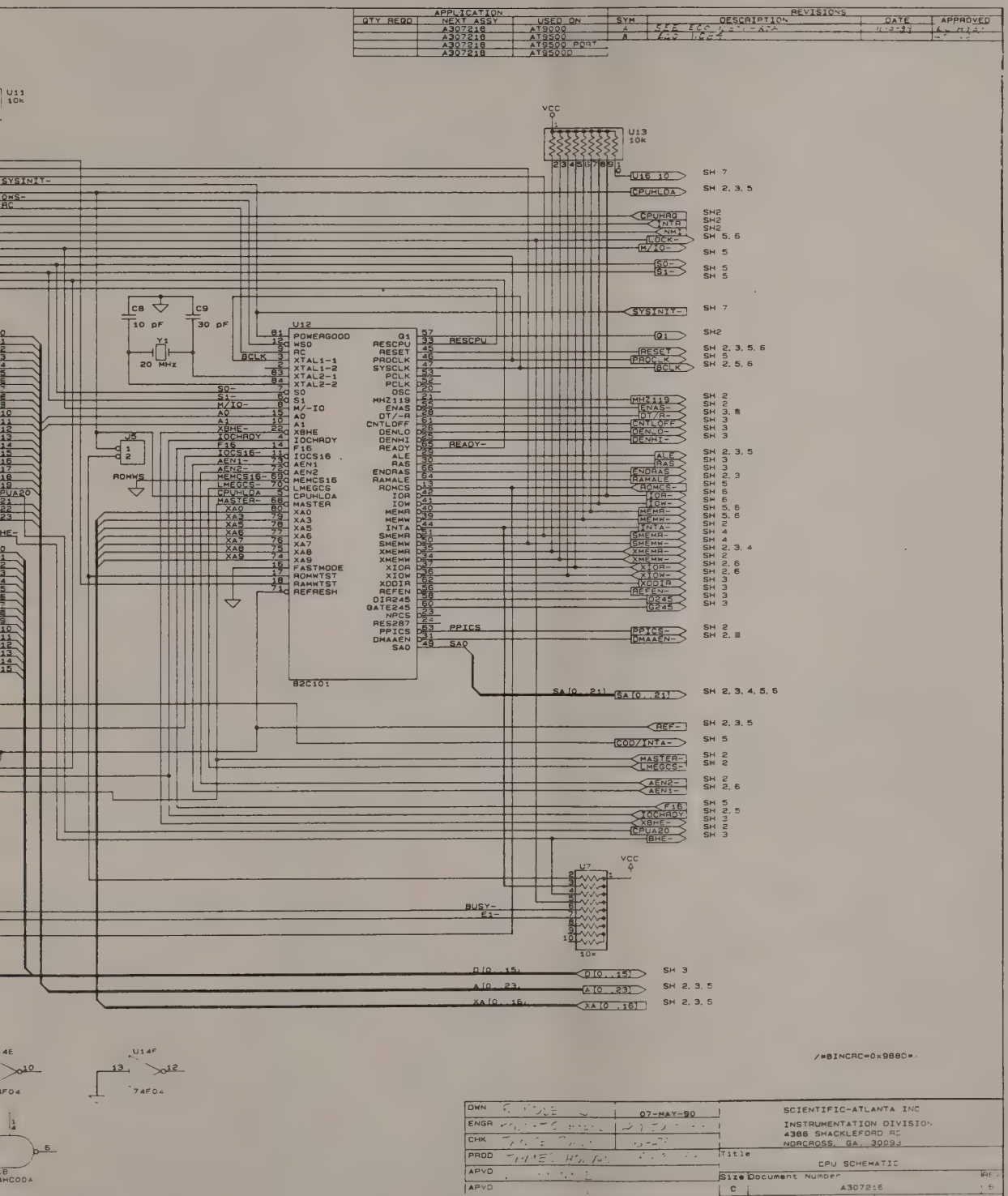
APPLICATION
QTY REQD
NEXT ASSY
USED ON
A307218
AT9000
A307218
AT9500
A307218
AT9500 PORT
A307218
AT9500D
REVISIONS
SYM
DESCRIPTION
DATE
APPROVED
U11
10K
VCC
U13
10K
U12
POWERGOOD
WSO
RC
XTAL1-1
XTAL1-2
XTAL2-1
XTAL2-2
S0
S1
M/-IO
A0
A1
XBHE
IOCHRDY
F16
IOCS16
AEN1
AEN2
MEMCS16
LMEGCS
CPUHLDA
MASTER
XA0
XA3
XA5
XA6
XA7
XA8
XA9
FASTMODE
ROMWTST
RAMWTST
REFRESH
Q1
RESCPU
RESET
PROCLK
SYSCLK
PCLK
PCLK
OSC
MHZ119
ENAS
DT/-R
CNTLOFF
DENLO
DENHI
READY
ALE
RAS
ENDRAS
RAMALE
ROMCS
IOR
IOW
MEMR
MEMW
INTA
SMEMR
SMEMW
XMEMR
XMEMW
XIOR
XIOW
XDDIR
REFEN
DIR245
GATE245
NPCS
RES287
PPICS
DMAAEN
SA0
B2C101
C8
10 pF
C9
30 pF
Y1
20 MHz
J5
ROMWS
BCLK
RESCPU
READY-
PPICS
SA0
U7
10K
BUSY-
E1-
U14F
74F04
/*BINCRC=0x988D*/
DWN
07-MAY-90
ENGR
CHK
PROD
APVD
APVD
SCIENTIFIC-ATLANTA INC
INSTRUMENTATION DIVISION
4388 SHACKLEFORD RD
NORCROSS, GA. 30093
Title
CPU SCHEMATIC
Size
Document Number
C
A307216
Date:
May 7, 1990
Sheet
1 of

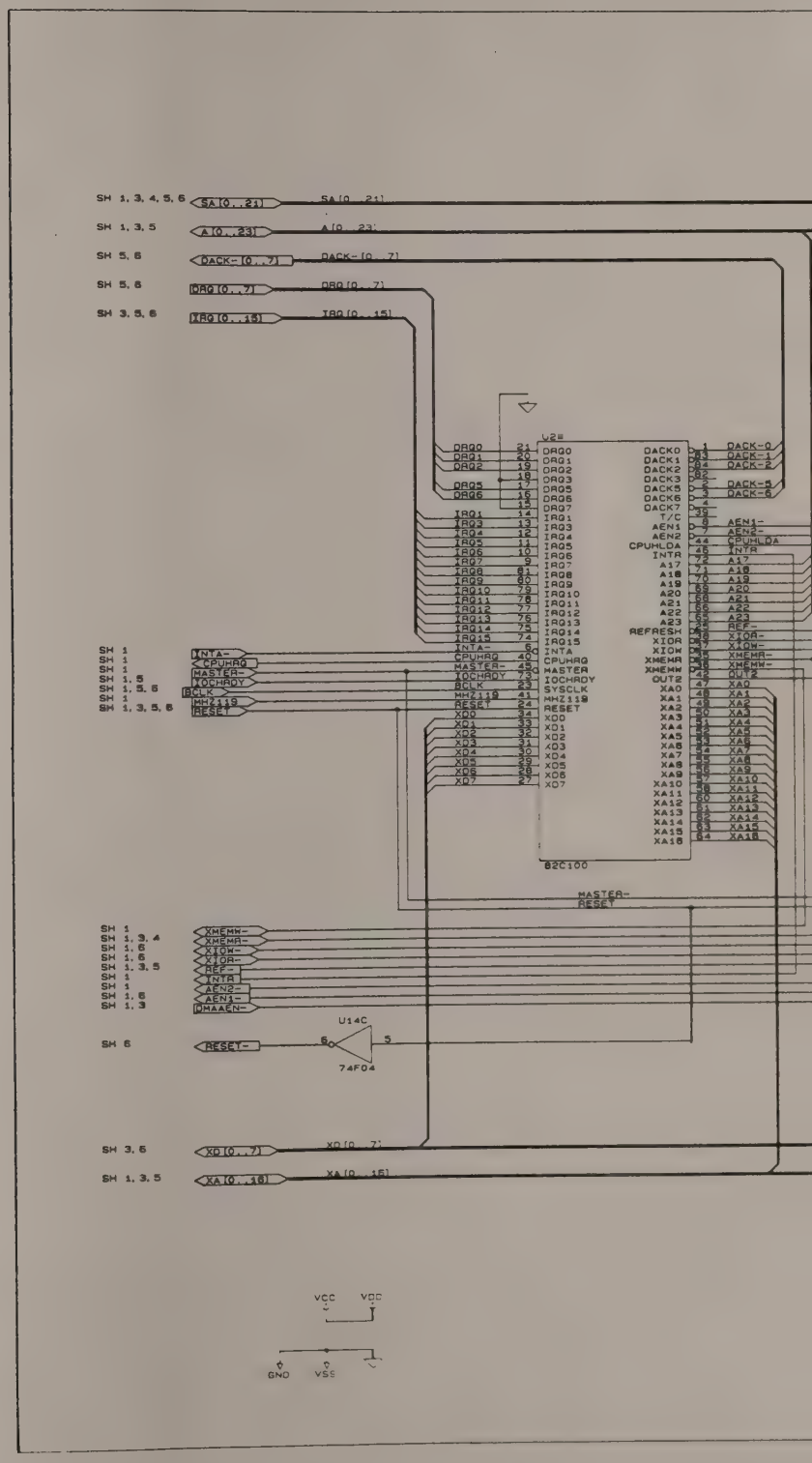
SH 1, 3, 4, 5, 6
SA[0..21]
SH 1, 3, 5
A[0..23]
SH 5, 6
DACK-[0..7]
SH 5, 6
DRQ[0..7]
SH 3, 5, 6
IRQ[0..15]
U2=
DRQ0
DRQ1
DRQ2
DRQ5
DRQ6
IRQ1
IRQ3
IRQ4
IRQ5
IRQ6
IRQ7
IRQ8
IRQ9
IRQ10
IRQ11
IRQ12
IRQ13
IRQ14
IRQ15
INTA-
CPUHRQ
MASTER-
IOCHRDY
BCLK
MHZ119
RESET
XD0
XD1
XD2
XD3
XD4
XD5
XD6
XD7
DACK0
DACK1
DACK2
DACK3
DACK5
DACK6
DACK7
T/C
AEN1
AEN2
CPUHLDA
INTR
A17
A18
A19
A20
A21
A22
A23
REFRESH
XIOR
XIOW
XMEMR
XMEMW
OUT2
XA0
XA1
XA2
XA3
XA4
XA5
XA6
XA7
XA8
XA9
XA10
XA11
XA12
XA13
XA14
XA15
XA16
82C100
SH 1
SH 1
SH 1
SH 1, 5
SH 1, 5, 6
SH 1
SH 1, 3, 5, 6
MASTER-
RESET
SH 1
SH 1, 3, 4
SH 1, 6
SH 1, 3, 5
SH 1
SH 1
SH 1, 6
SH 1, 3
XMEMW-
XMEMR-
XIOW-
XIOR-
REF-
INTA
AEN2-
AEN1-
DMAAEN-
SH 6
RESET-
U14C
74F04
SH 3, 6
XD[0..7]
SH 1, 3, 5
XA[0..16]
VCC
VDD
GND
VSS

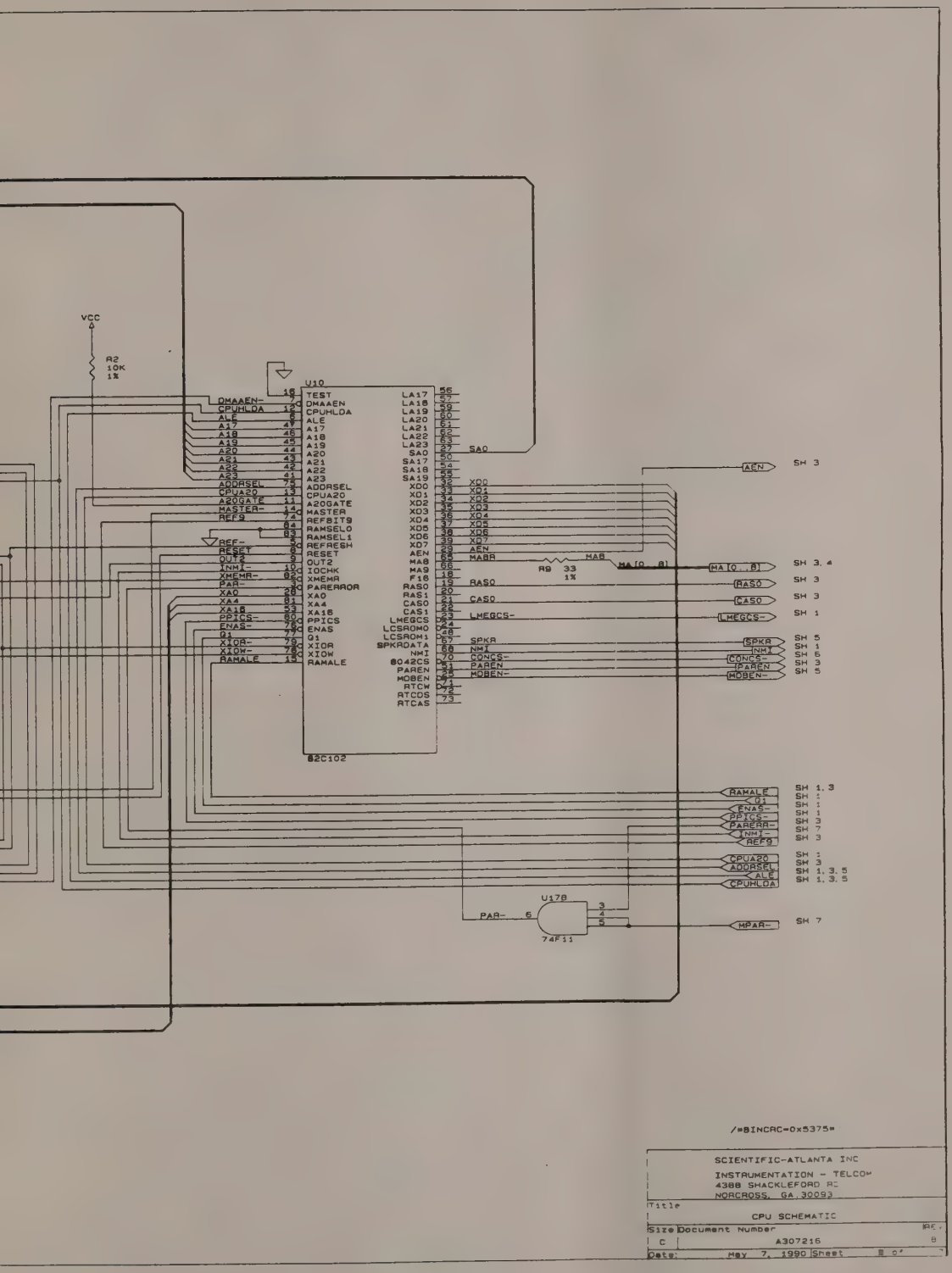
VCC
R2
10K
1%
U10
TEST
DMAAEN
CPUHLDA
ALE
A17
A18
A19
A20
A21
A22
A23
ADDRSEL
CPUA20
A20GATE
MASTER
REFBIT9
RAMSEL0
RAMSEL1
REFRESH
RESET
OUT2
IOCHK
XMEMR
PARERROR
XA0
XA4
XA16
PPICS
ENAS
Q1
XIOR
XIOW
RAMALE
LA17
LA18
LA19
LA20
LA21
LA22
LA23
SA0
SA17
SA18
SA19
XD0
XD1
XD2
XD3
XD4
XD5
XD6
XD7
AEN
MA8
MA9
F16
RAS0
RAS1
CAS0
CAS1
LMEGCS
LCSROM0
LCSROM1
SPKRDATA
NMI
8042CS
PAREN
MDBEN
RTCW
RTCDS
RTCAS
82C102
R9 33
1%
U17B
74F11
SH 3
SH 3, 4
SH 1
SH 5
SH 1, 3
SH 7
SH 1, 3, 5
/*BINCRC=0x5375*
SCIENTIFIC-ATLANTA INC
INSTRUMENTATION - TELCOM
4388 SHACKLEFORD RD
NORCROSS, GA 30093
Title
CPU SCHEMATIC
Size
Document Number
REV
C
A307216
B
Date: May 7, 1990
Sheet

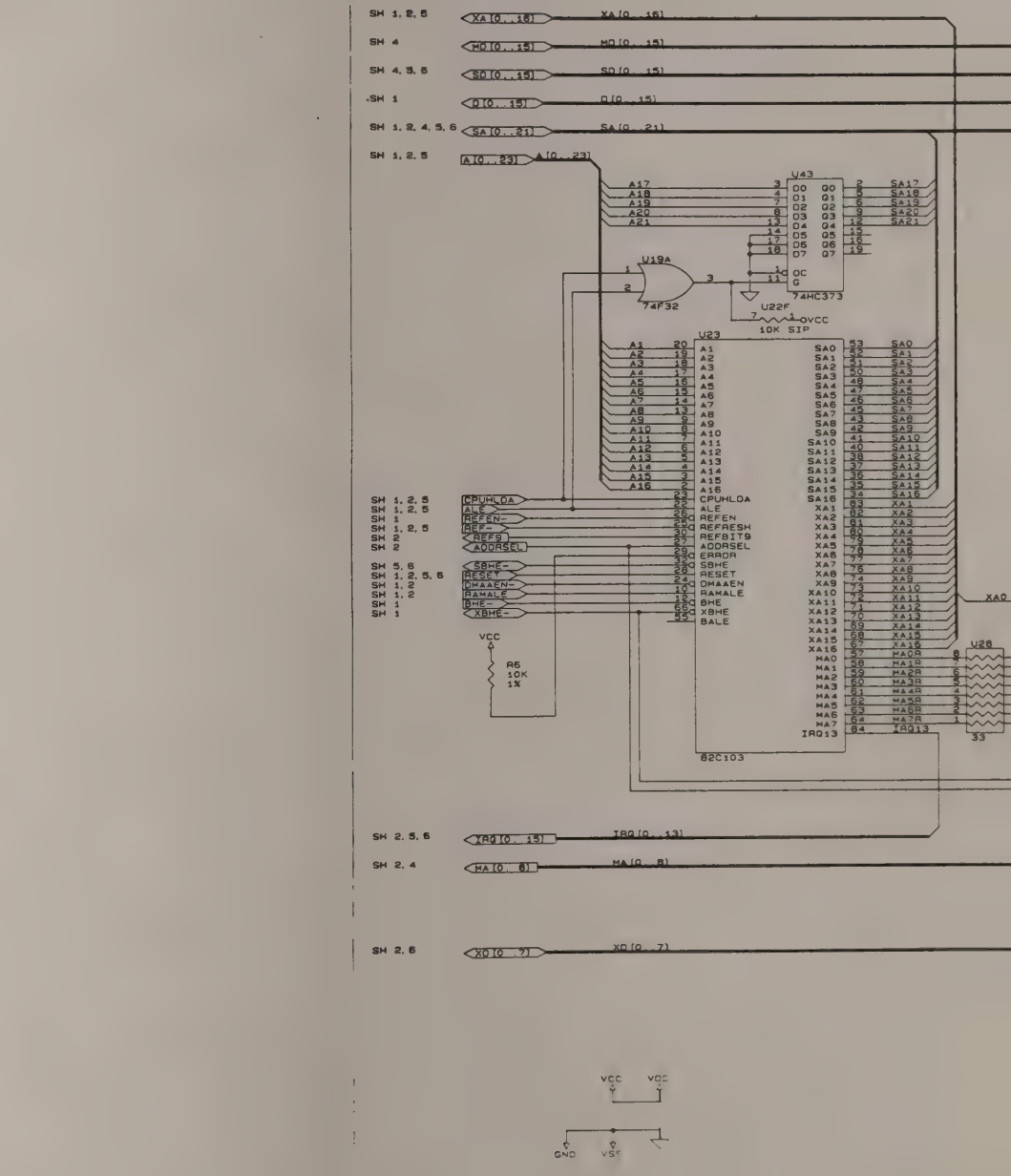
SH 1, 2, 5
XA[0..19]
XA[0..15]
SH 4
MD[0..15]
MD[0..15]
SH 4, 3, 5
SD[0..15]
SD[0..15]
SH 1
D[0..15]
D[0..15]
SH 1, 2, 4, 5, 6
SA[0..21]
SA[0..21]
SH 1, 2, 5
A[0..23]
A[0..23]
U43
74HC373
U19A
74F32
U22F
10K SIP
VCC
U23
82C103
CPUHLDA
ALE
REFEN
REFRESH
REFBIT9
ADDRSEL
ERRDR
SBHE
RESET
DMAAEN
RAMALE
BHE
XBHE
BALE
IRQ13
R5
10K
1%
U28
33
SH 2, 5, 6
IRQ[0..15]
IRQ[0..13]
SH 2, 4
MA[0..8]
MA[0..8]
SH 2, 6
XD[0..7]
XD[0..7]
GND
VSS

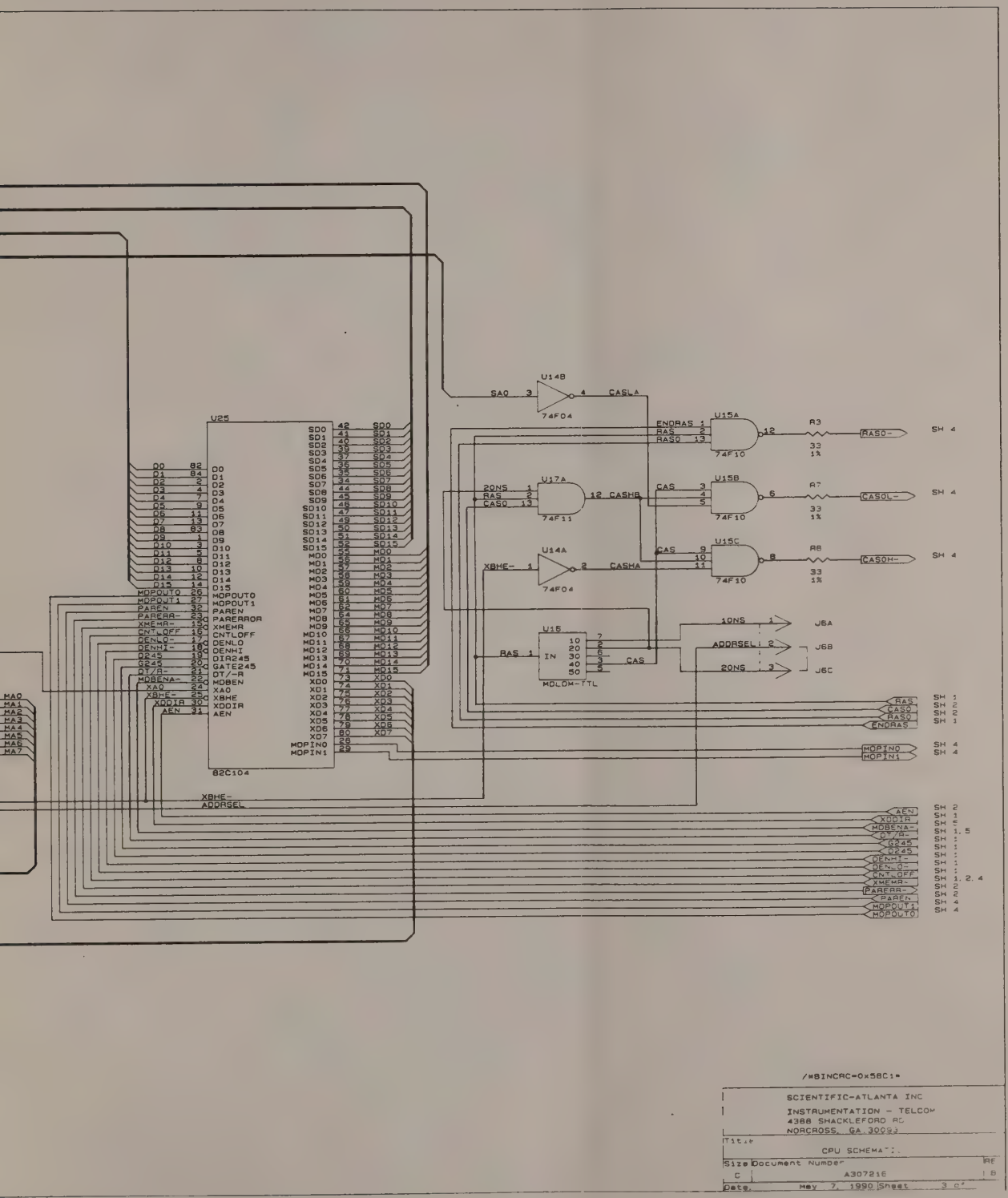
U25
82C104
U14B
74F04
U17A
74F11
U14A
74F04
U15A
U15B
U15C
74F10
U16
MDLOW-TTL
SA0
CASLA
20NS
RAS
CAS0
CASHB
XBHE-
CASHA
ENDRAS
R3
R7
R8
33
1%
RAS0-
CAS0L-
CAS0H-
10NS
ADDRSEL
20NS
J6A
J6B
J6C
XBHE-
ADDRSEL
/*BINCAC=0x58C1*
SCIENTIFIC-ATLANTA INC
INSTRUMENTATION - TELCOM
4388 SHACKLEFORD RD
NORCROSS, GA 30093
CPU SCHEMATIC
Size Document Number
A307216
Date: May 7, 1990 Sheet 3 of

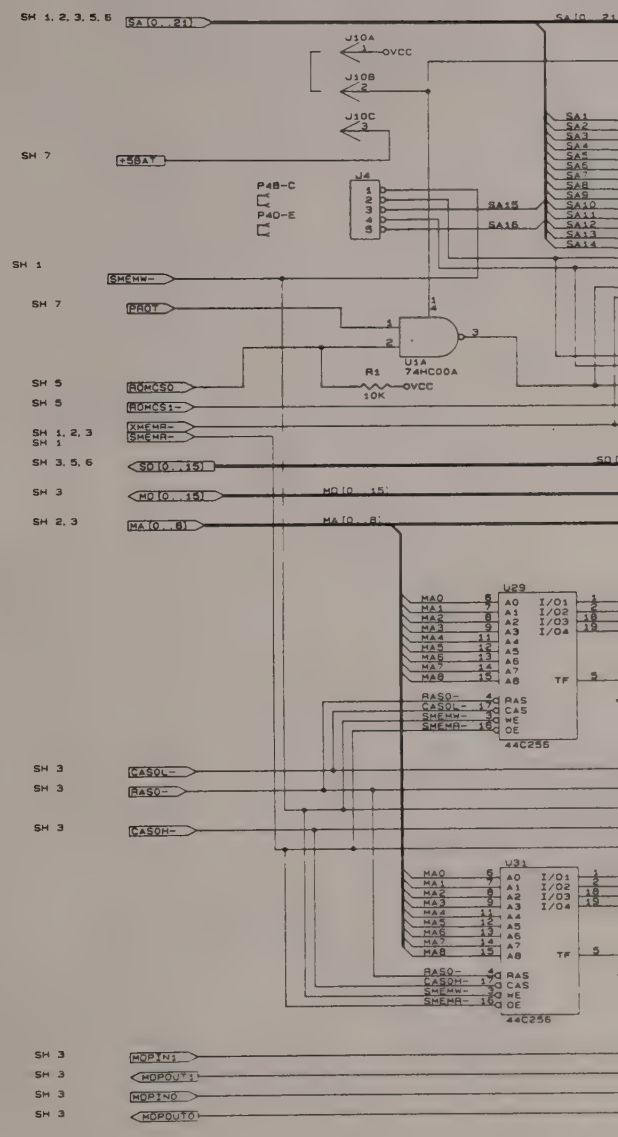

NOTE: THE FOLLOWING PARTS ARE NOT USED ON THIS BOARD
J5, J11, J13, J12

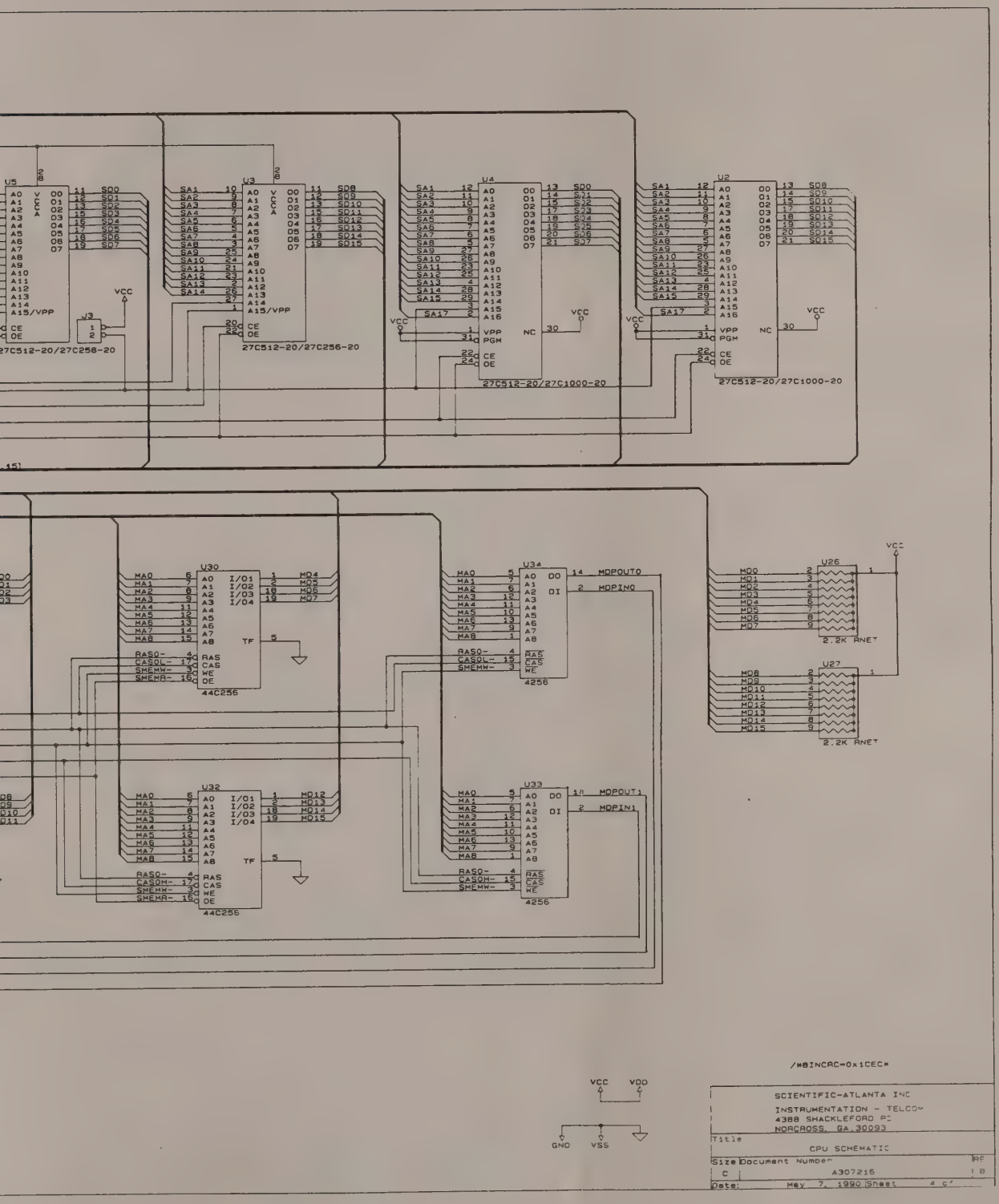
U5
U3
U4
U2
27C512-20/27C256-20
27C512-20/27C1000-20
J3
VCC
U30
U32
U34
U33
44C256
4256
MDPOUT0
MDPIN0
MDPOUT1
MDPIN1
U26
U27
2.2K ANET
/*BINCAC=0x1CEC*
SCIENTIFIC-ATLANTA INC
INSTRUMENTATION - TELCOM
4388 SHACKLEFORD RD
NORCROSS, GA 30093
Title
CPU SCHEMATIC
Size Document Number
A307216
Date: May 7, 1990 Sheet 4 of

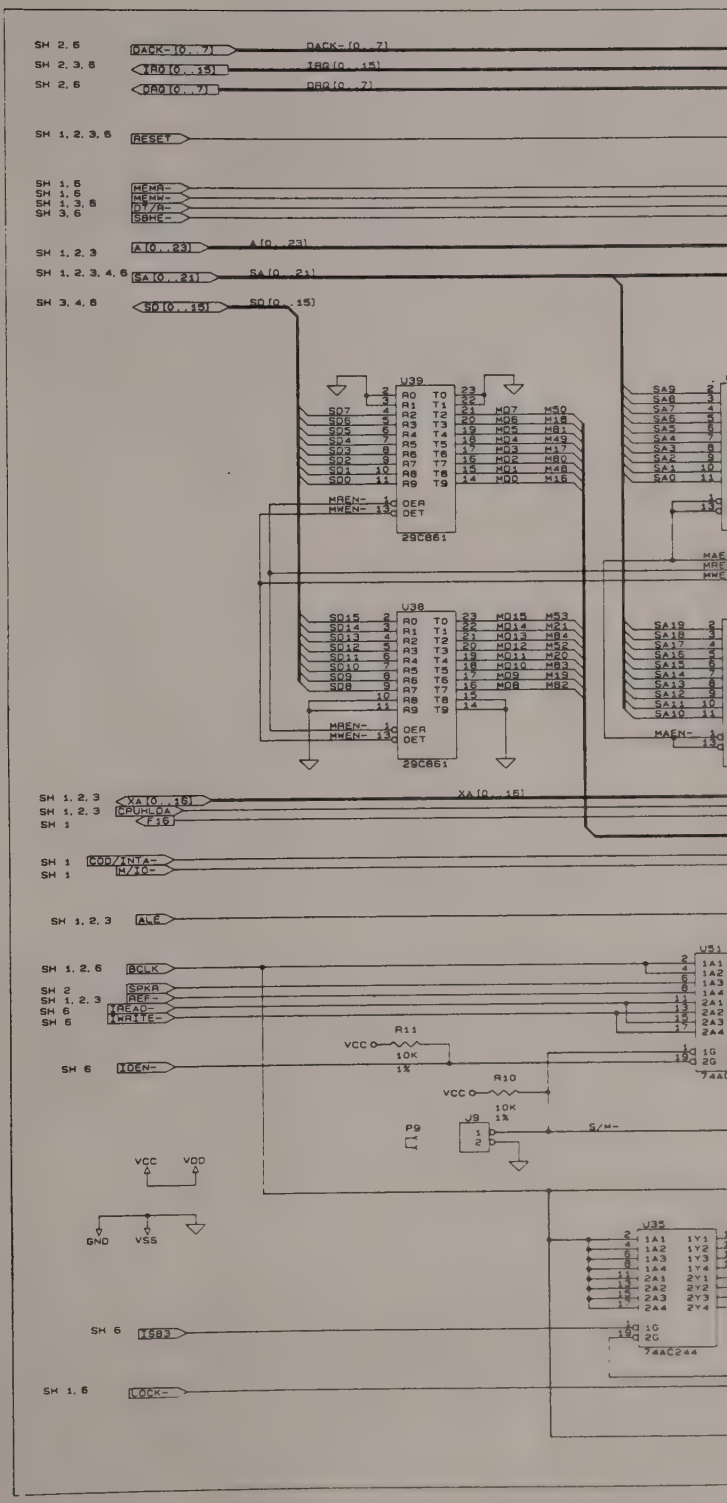

SH 2, 6
DACK-[0..7]
SH 2, 3, 6
IRQ[0..15]
SH 2, 6
DRQ[0..7]
SH 1, 2, 3, 6
RESET
SH 1, 6
SH 1, 6
SH 1, 3, 6
SH 3, 6
MEMR-
MEMW-
DT/R-
SBHE-
SH 1, 2, 3
A[0..23]
SH 1, 2, 3, 4, 6
SA[0..21]
SH 3, 4, 6
SD[0..15]
U39
29C861
U38
29C861
SH 1, 2, 3
XA[0..16]
SH 1, 2, 3
CPUHLDA
SH 1
F16
SH 1
COD/INTA-
SH 1
M/IO-
SH 1, 2, 3
ALE
SH 1, 2, 6
BCLK
SH 2
SPKR
SH 1, 2, 3
REF-
SH 6
IREAD-
SH 6
IWRITE-
SH 6
IOEN-
R11
10K
1%
R10
10K
1%
VCC
P9
J9
S/M-
VCC
VDD
GND
VSS
U35
74AC244
SH 6
ISB3
SH 1, 6
LOCK-

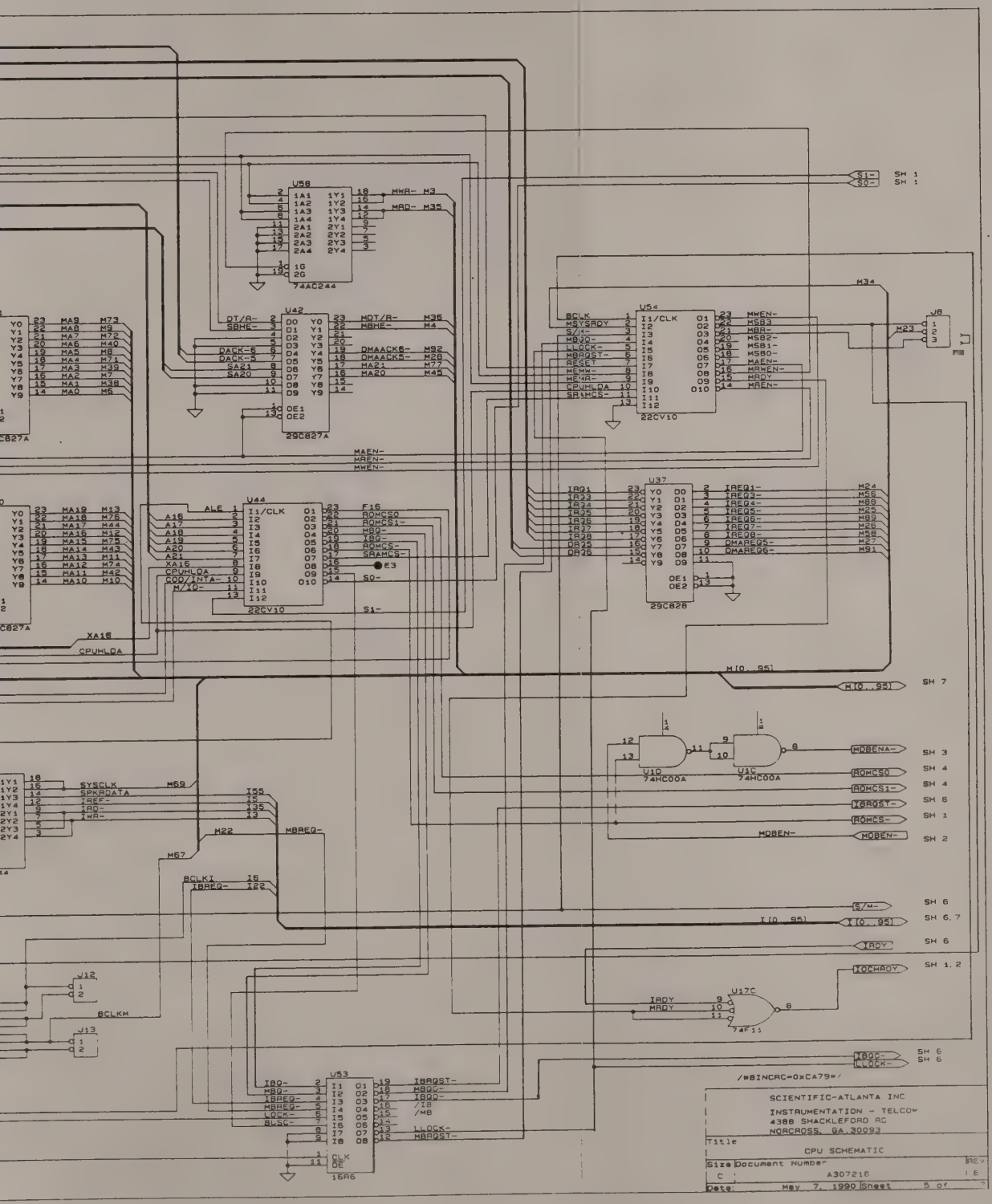
U58
74AC244
U42
29C827A
U54
22CV10
U8
U37
29C828
U44
22CV10
U10
74HC00A
U11C
74HC00A
U17C
74F11
U53
16R6
U12
U13
SCIENTIFIC-ATLANTA INC
INSTRUMENTATION - TELCOM
4386 SHACKLEFORD RD
NORCROSS, GA. 30093
Title
CPU SCHEMATIC
Size
Document Number
A307216
Date: May 7, 1990 Sheet 5 of

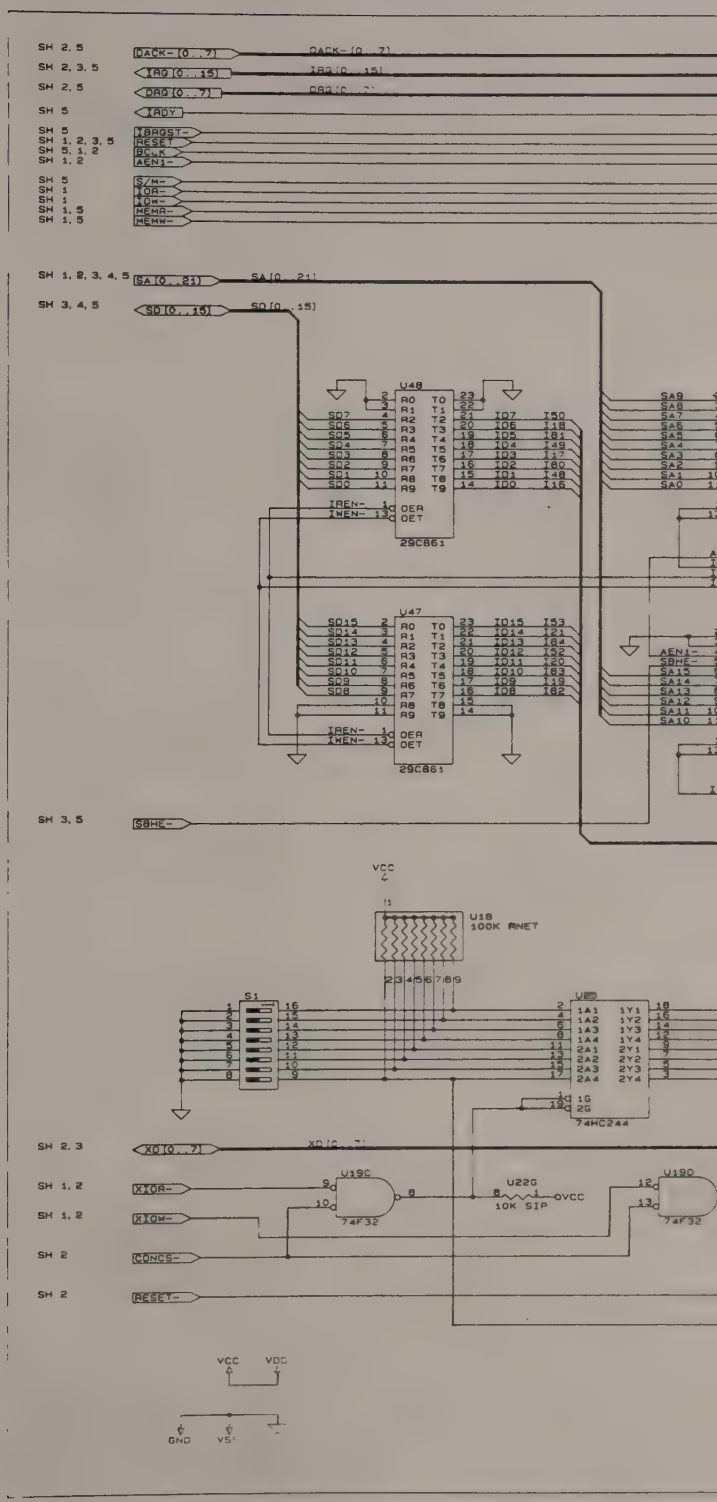
SH 2, 5
DACK-[0..7]
SH 2, 3, 5
IRQ[0..15]
SH 2, 5
DRQ[0..7]
SH 5
IRDY
SH 5
IBRQST-
SH 1, 2, 3, 5
RESET
SH 5, 1, 2
BCLK
SH 1, 2
AEN1-
SH 5
S/M-
SH 1
IOR-
SH 1
IOW-
SH 1, 5
MEMR-
SH 1, 5
MEMW-
SH 1, 2, 3, 4, 5
SA[0..21]
SH 3, 4, 5
SD[0..15]
U48
U47
29C861
IREN-
IWEN-
OER
OET
SH 3, 5
SBHE-
VCC
U18
100K RNET
S1
U20
74HC244
SH 2, 3
XD[0..7]
SH 1, 2
XIOR-
SH 1, 2
XIOW-
SH 2
CONCS-
SH 2
RESET-
U19C
74F32
U22G
10K SIP
U19D
74F32
GND

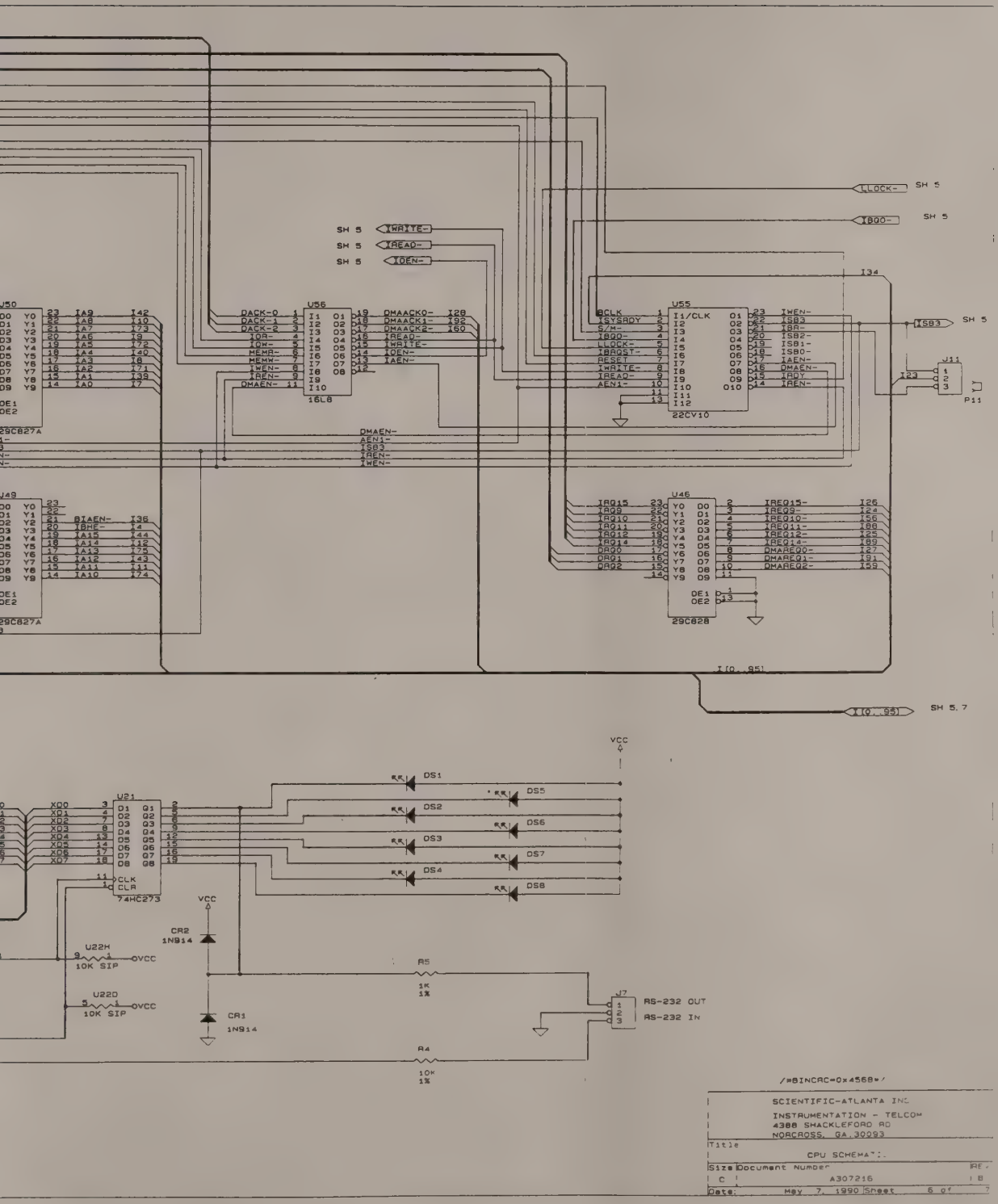

/*$INCAC=0x4568*/

SCIENTIFIC-ATLANTA INC	
INSTRUMENTATION - TELCOM	
4308 SHACKLEFORD RD	
NORCROSS, GA.30093	
Title	
CPU SCHEMATIC	
Size: C	Document Number: A307216 — REV: B
Date: May 7, 1990	Sheet 6 of 7

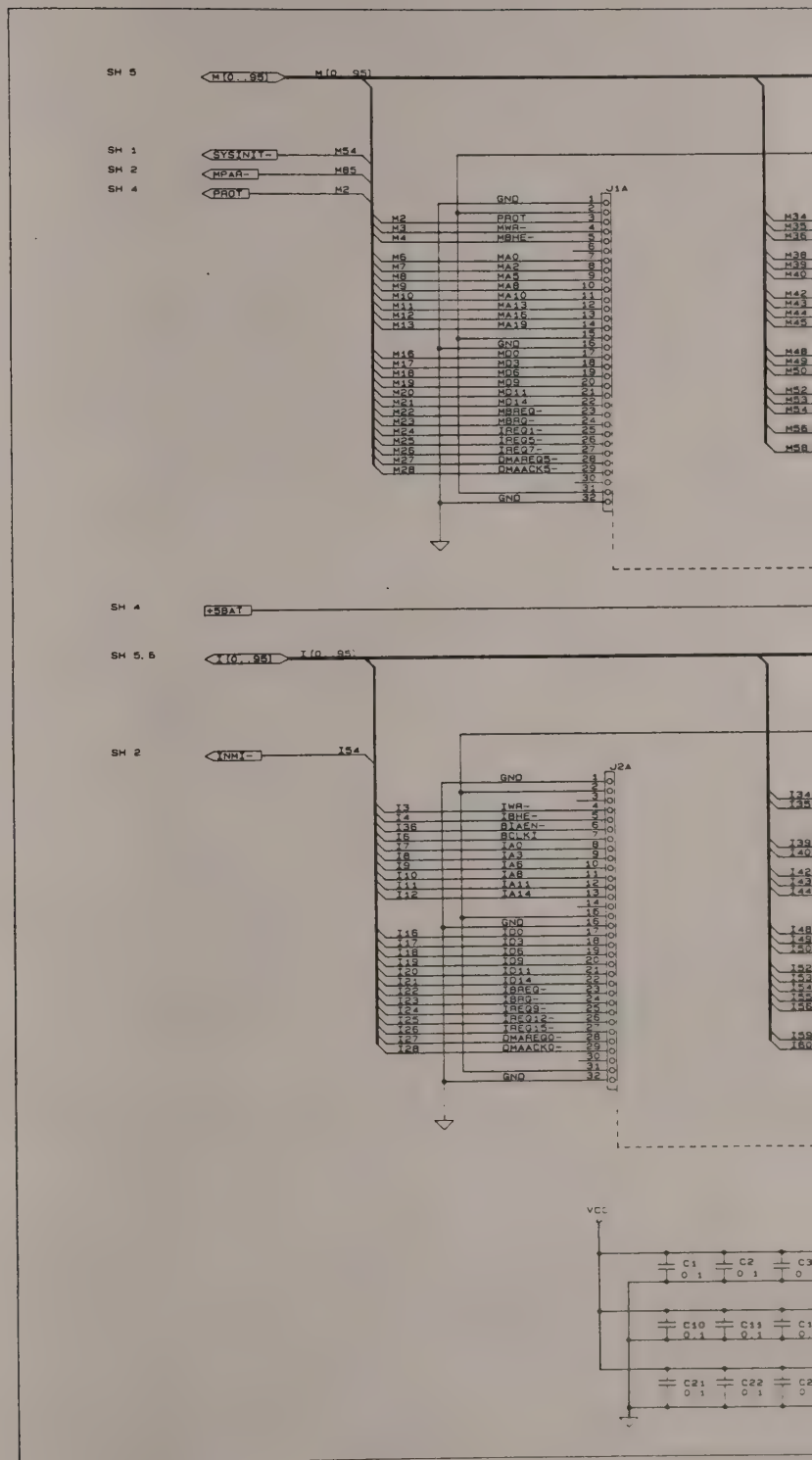
SH 5
M(0..95)
SH 1
SYSINIT-
SH 2
MPAR-
SH 4
PROT
J1A
GND
MWR-
MBHE-
MA0
MA2
MA5
MA8
MA10
MA13
MA16
MA19
MDO
MD3
MD6
MD9
MD11
MD14
MBREQ-
MBRQ-
IREQ1-
IREQ5-
IREQ7-
DMAREQ5-
DMAACK5-
+5BAT
SH 5, 6
I(0..95)
SH 2
INMI-
J2A
IWR-
IBHE-
BLAEN-
BCLK1
IA0
IA3
IA6
IA11
IA14
IDO
ID3
ID6
ID9
ID11
ID14
IBREQ-
IBRQ-
IREQ9-
IREQ12-
IREQ15-
DMAREQ0-
DMAACK0-
VCC
C1
C2
C10
C11
C21
C22
0.1

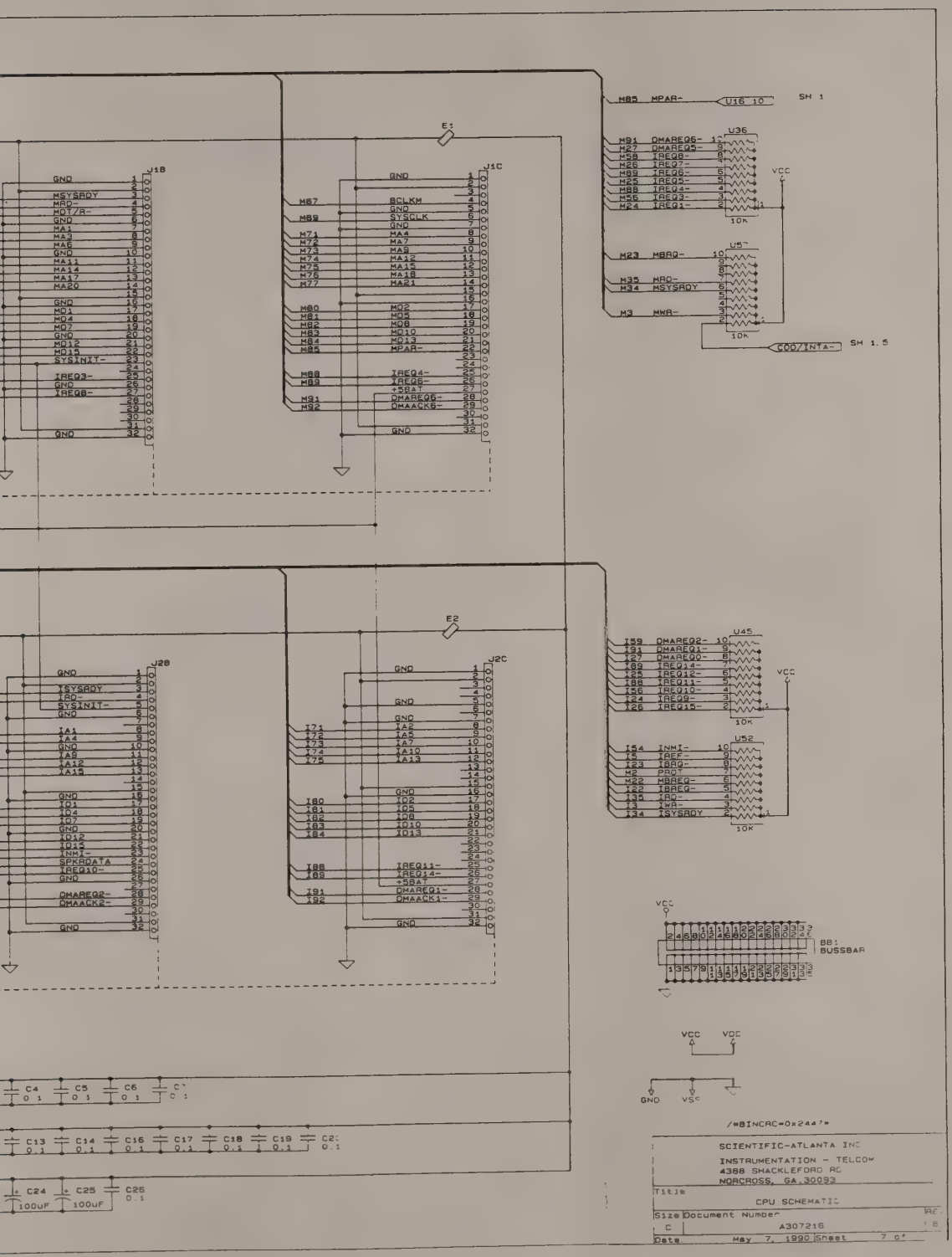
J1B
J1C
J2B
J2C
E1
E2
U36
U45
U52
U57
U16
SH 1
SH 1.5
VCC
10K
COD/INTA-
BB1
BUSSBAR
GND
VSC
/*BINCRC=0x2447*
SCIENTIFIC-ATLANTA INC
INSTRUMENTATION - TELCOM
4388 SHACKLEFORD RD
NORCROSS, GA.30093
Title
CPU SCHEMATIC
Size
Document Number
A307216
Date
May 7, 1990
Sheet 7 of

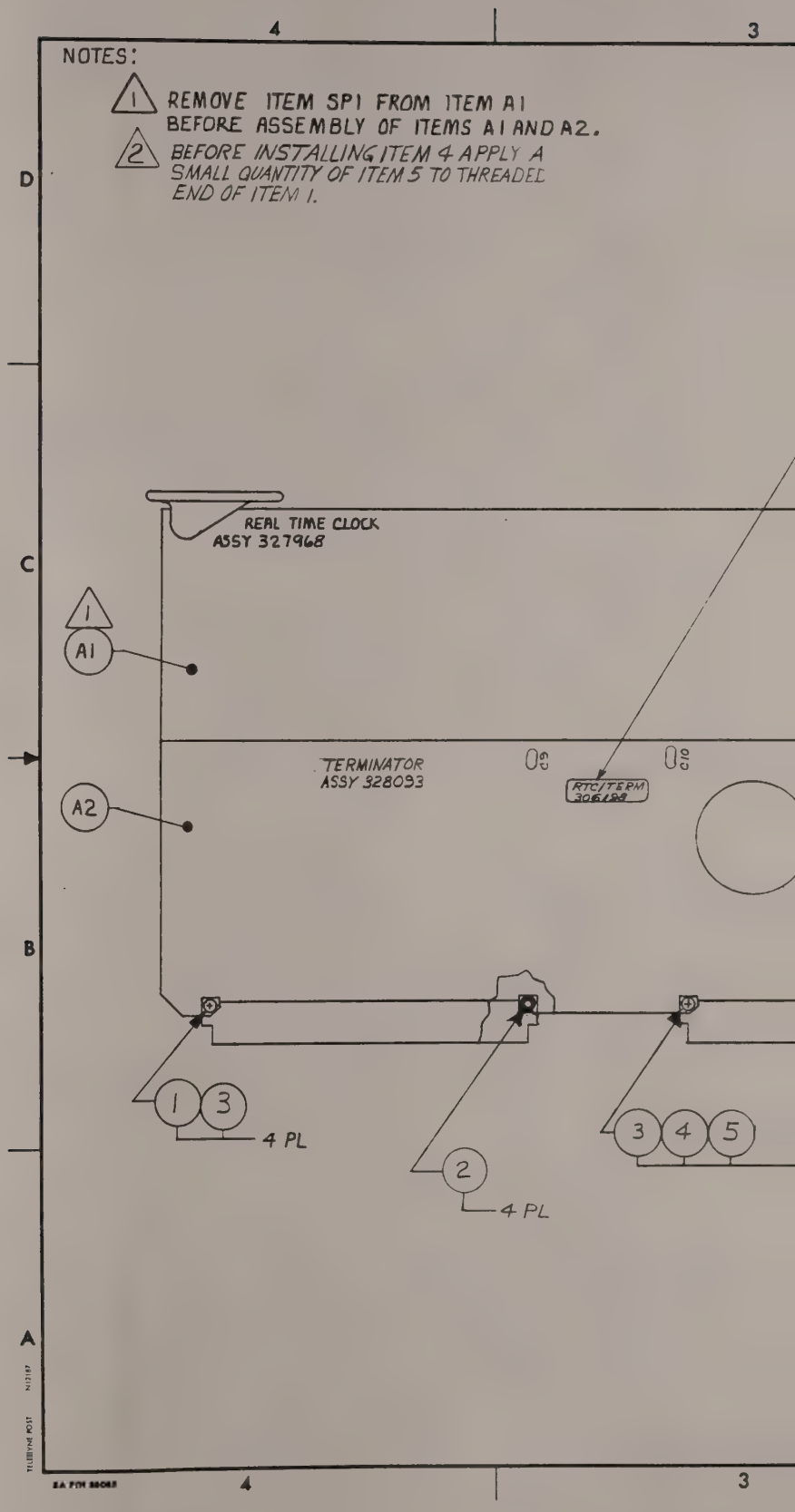
4
3
NOTES:
1 REMOVE ITEM SP1 FROM ITEM A1 BEFORE ASSEMBLY OF ITEMS A1 AND A2.
2 BEFORE INSTALLING ITEM 4 APPLY A SMALL QUANTITY OF ITEM 5 TO THREADED END OF ITEM 1.
D
C
B
A
REAL TIME CLOCK ASSY 327968
1
A1
A2
TERMINATOR ASSY 328093
C9
C10
RTC/TERM 306198
1 3
4 PL
2
4 PL
3 4 5
4
3

APPLICATION		
QTY REQD	NEXT ASSY	USED ON
1	306200	AT9000

REVISIONS				
ZONE	REV	DESCRIPTION	DATE	APPROVED
	-	INITIAL RELEASE		
	A	ECO 11234	7/17/90	[illegible]

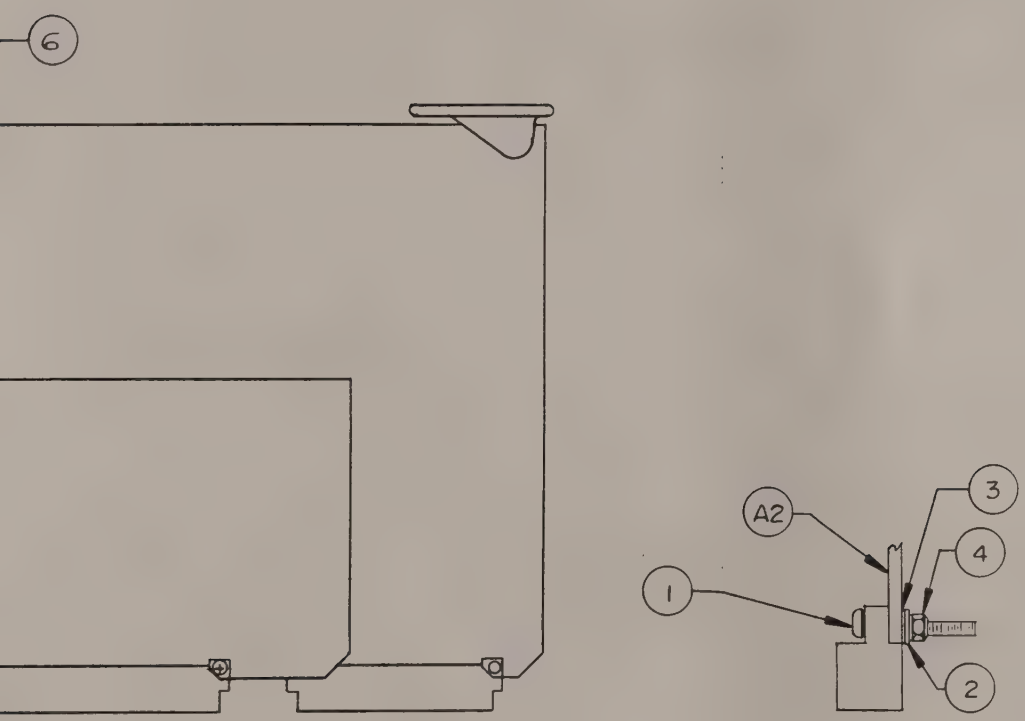

- 4 PL
FAR SIDE

SEE SEPARATE PARTS LIST

ITEM OR FIND NO.	QTY REQD	S-A STOCK NO.	NOMENCLATURE OR DESCRIPTION	MATL SPEC AND SIZE OR COMPONENT VALUE	IDENTIFYING OR PART NO	FSCM NO

PARTS LIST

UNLESS OTHERWISE SPECIFIED ALL CAPACITORS ARE IN MICROFARADS AND ALL RESISTORS ARE IN OHMS. ±10% AND 1/4 WATT

LAST REFERENCE DESIGNATION USED

C CR J K
Q R S U

ALL DIMENSIONS ARE IN INCHES UNLESS OTHERWISE SPECIFIED

TOLERANCES
3 PLACE DECIMAL ± .005
2 PLACE DECIMAL ± .03
1 PLACE DECIMAL ± 1

FRACTIONS ± ANGLES 45° 30'

MAX SURFACE ROUGHNESS 125
ALL MACHINED SURFACES EXCEPT AS NOTED

BREAK SHARP EDGES AND CORNERS .010 MAX

FINISH NONE

CONTRACT NO.

DWN	[illegible]	12-2-88
ENGR	[illegible]	1/12/89
CHK	[illegible]	12-20-88
PROJ	[illegible]	5-2-89
APVD	B. Sprinkle	
APVD		

Scientific-Atlanta 3845 Pleasantdale Road Atlanta, Georgia 30340

REAL TIME CLOCK — TERMINATOR ASSY

SIZE	FSCM NO	DWG NO	REV
C	10110	306198	A

SCALE 1/1 SHEET 1 OF 1

DWG NO. 306198 SH 1 REV A

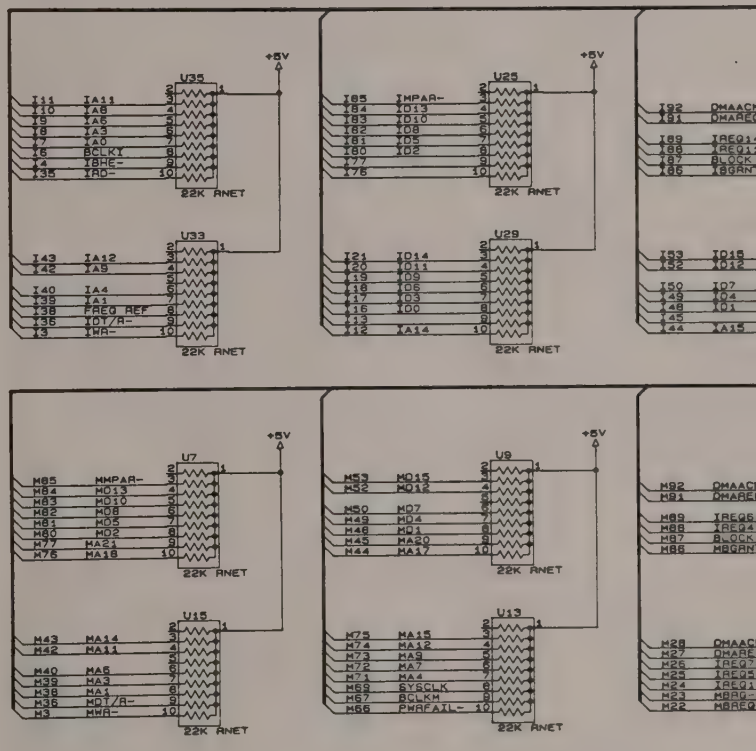
+5V
U35
I11 IA11
I10 IA8
I9 IA6
I8 IA3
I7 IA0
I6 BCLK1
I4 I8HE-
I35 IAD-
22K ANET
U33
I43 IA12
I42 IA9
I40 IA4
I39 IA1
I38 FREQ REF
I36 IOT/R-
I3 IWA-
22K ANET
U25
I85 IMPAR-
I84 ID13
I83 ID10
I82 ID8
I81 ID5
I80 ID2
I77
I76
22K ANET
U29
I21 ID14
I20 ID11
I19 ID9
I18 ID6
I17 ID3
I16 ID0
I13
I12 IA14
22K ANET
I92 DMAACK
I91 DMAREQ
I89 IREQ1
I88 IREQ1
I87 BLOCK
I86 I8GRN
I53 ID15
I52 ID12
I50 ID7
I49 ID4
I48 ID1
I45
I44 IA15
+5V
U7
M85 MMPAR-
M84 MD13
M83 MD10
M82 MD8
M81 MD5
M80 MD2
M77 MA21
M76 MA18
22K ANET
U15
M43 MA14
M42 MA11
M40 MA8
M39 MA3
M38 MA1
M36 MDT/A-
M3 MWA-
22K ANET
U9
M53 MD15
M52 MD12
M50 MD7
M49 MD4
M48 MD1
M45 MA20
M44 MA17
22K ANET
U13
M75 MA15
M74 MA12
M73 MA9
M72 MA7
M71 MA4
M69 SYSCLK
M67 BCLKM
M66 PWRFAIL-
22K ANET
M92 DMAACK
M91 DMAREQ
M89 IREQ6
M88 IREQ4
M87 BLOCK
M86 MBGRN
M28 DMAACK
M27 DMAREQ
M26 IREQ7
M25 IREQ5
M24 IREQ1
M23 MBRQ-
M22 MBREQ

APPLICATION			REVISIONS				
QTY REQD	NEXT ASSY	USED ON	ZONE	REV	DESCRIPTION	DATE	APVD
0	A326093	AT9000		A	REV PRIOR TO RELEASE		

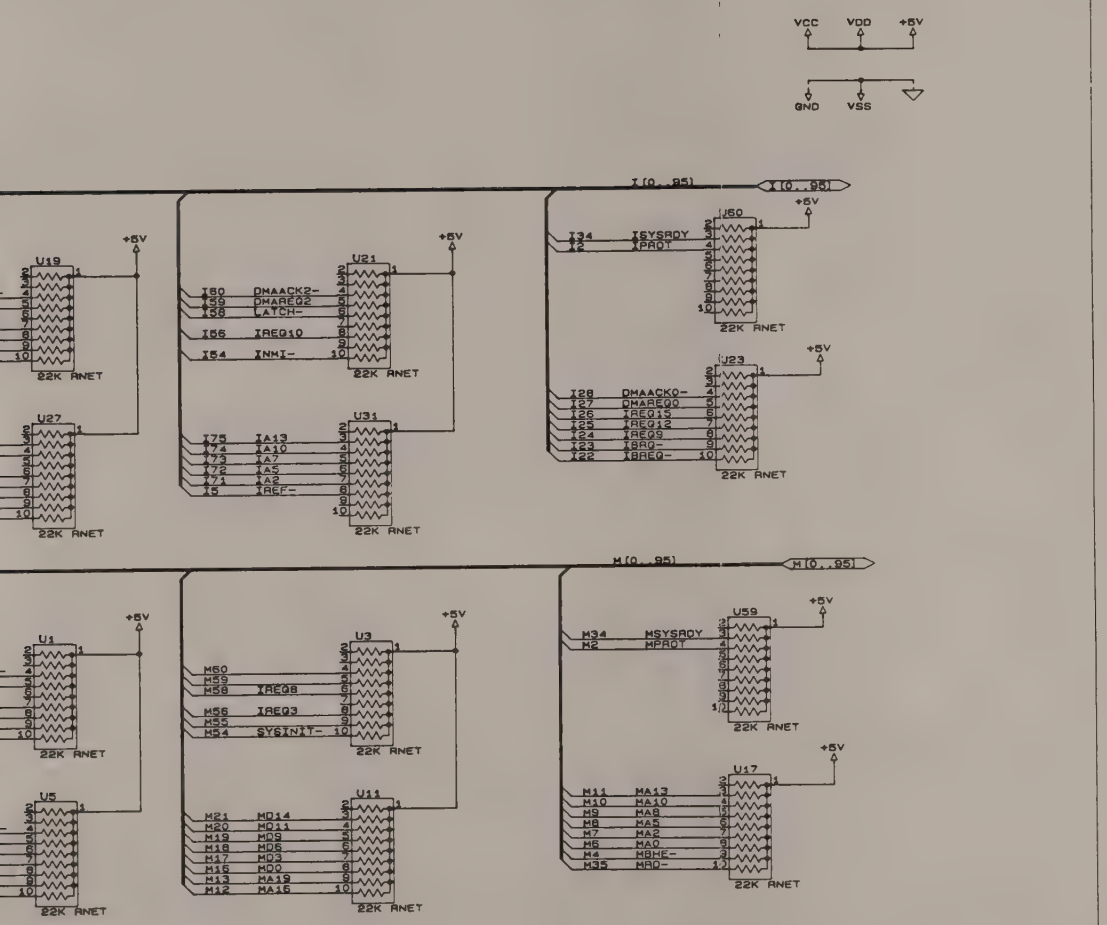

/*BINCRC=0x4A3F*/

DWN	N. KAYTON	6-20-89
ENGR	Robert E. Hyers	7/17/89
CHK	Janice Cohle	7-17-89
PROD	James Holland	7/17
APVD	B. Sprinkle	
APVD		

SCIENTIFIC-ATLANTA, INC.
INSTRUMENTATION DIVISION
4388 SHACKLEFORD RD.
NORCROSS, GA 30093

Title: TERMINATOR: PULL UPS

Size	Document Number	REV
C	328091	A

Date: July 17, 1989 Sheet 1 of 4

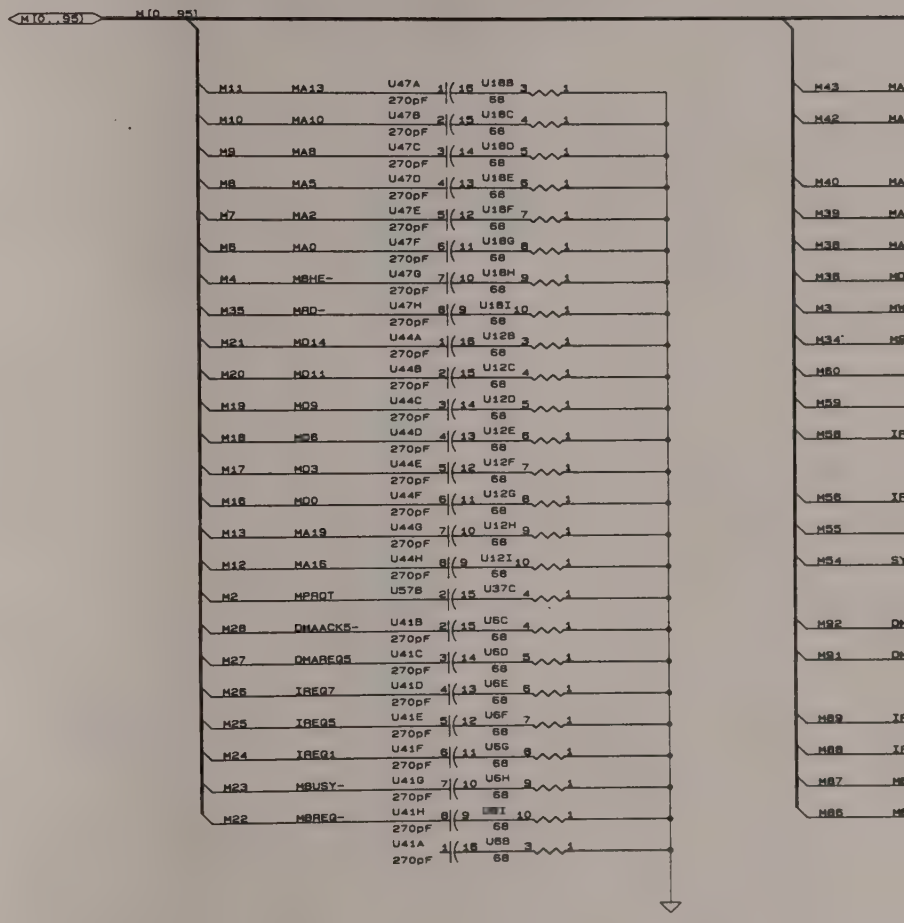
M[0..95]
M[0..95]
M11 MA13 U47A 270pF 1 16 U18B 3 68 1
M10 MA10 U47B 270pF 2 15 U18C 4 68 1
M9 MA8 U47C 270pF 3 14 U18D 5 68 1
M8 MA5 U47D 270pF 4 13 U18E 6 68 1
M7 MA2 U47E 270pF 5 12 U18F 7 68 1
M6 MA0 U47F 270pF 6 11 U18G 8 68 1
M4 MBHE- U47G 270pF 7 10 U18H 9 68 1
M35 MRD- U47H 270pF 8 9 U18I 10 68 1
M21 MD14 U44A 270pF 1 16 U12B 3 68 1
M20 MD11 U44B 270pF 2 15 U12C 4 68 1
M19 MD9 U44C 270pF 3 14 U12D 5 68 1
M18 MD6 U44D 270pF 4 13 U12E 6 68 1
M17 MD3 U44E 270pF 5 12 U12F 7 68 1
M16 MD0 U44F 270pF 6 11 U12G 8 68 1
M13 MA19 U44G 270pF 7 10 U12H 9 68 1
M12 MA16 U44H 270pF 8 9 U12I 10 68 1
M2 MPROT U57B 2 15 U37C 4
M28 DMAACK5- U41B 270pF 2 15 U6C 4 68 1
M27 DMAREQ5 U41C 270pF 3 14 U6D 5 68 1
M26 IREQ7 U41D 270pF 4 13 U6E 6 68 1
M25 IREQ5 U41E 270pF 5 12 U6F 7 68 1
M24 IREQ1 U41F 270pF 6 11 U6G 8 68 1
M23 MBUSY- U41G 270pF 7 10 U6H 9 68 1
M22 MBREQ- U41H 270pF 8 9 U6I 10 68 1
U41A 270pF 1 16 U6B 3 68
M43
M42
M40
M39
M38
M37
M3
M34
M60
M59
M58
M56
M55
M54
M92
M91
M89
M88
M87
M86

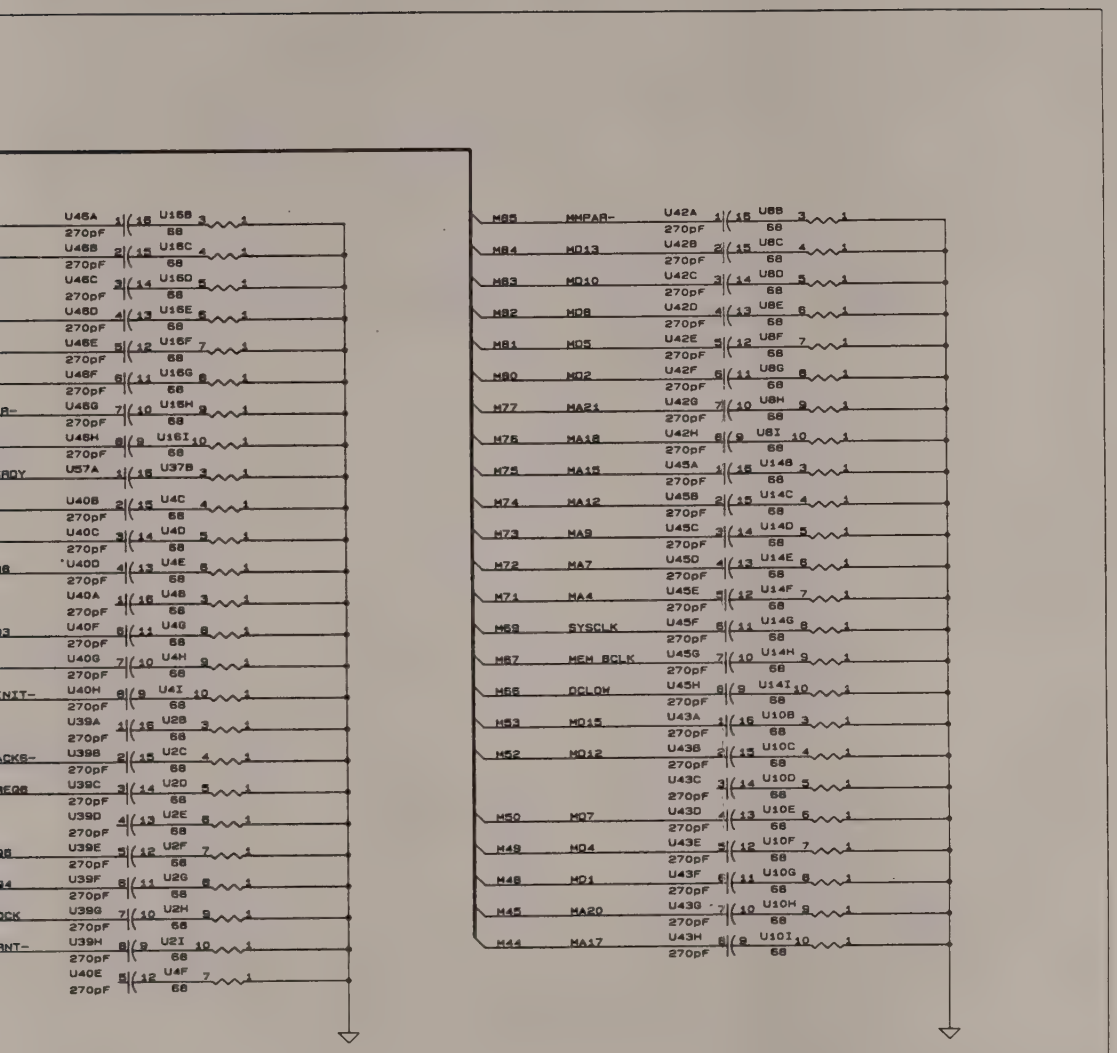

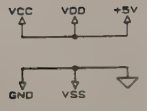

/*$INCRC=0x69F7*/

SCIENTIFIC-ATLANTA, INC.
INSTRUMENTATION DIVISION
4386 SHACKLEFORD RD.
NORCROSS, GA 30093

Title: TERMINATOR: MEM BUS AC TERMINATION

Size: C | Document Number: 32809 | REV: A

Date: July 14, 1989 | Sheet 2 of 4

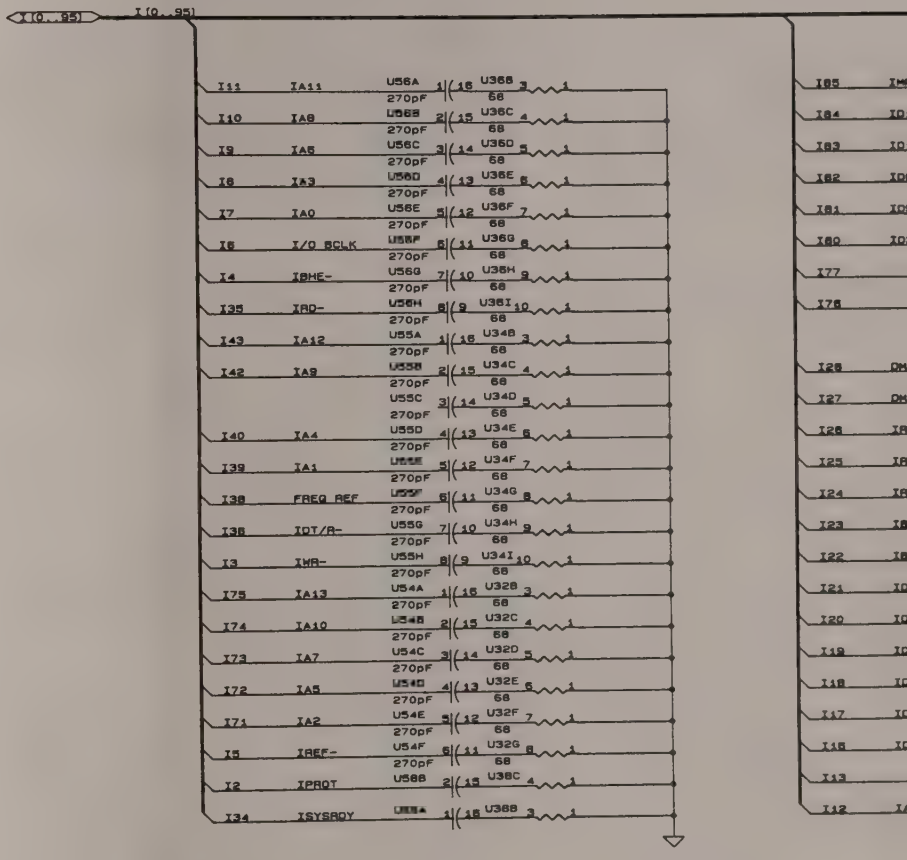
I[0..95]
I11 IA11 U56A 270pF
I10 IA8 U56B 270pF
I9 IA5 U56C 270pF
I8 IA3 U56D 270pF
I7 IA0 U56E 270pF
I6 I/O RCLK U56F 270pF
I4 IBHE- U56G 270pF
I35 IRD- U56H 270pF
I43 IA12 U55A 270pF
I42 IA9 U55B 270pF
U55C 270pF
I40 IA4 U55D 270pF
I39 IA1 U55E 270pF
I38 FREQ REF U55F 270pF
I36 IOT/R- U55G 270pF
I3 IWR- U55H 270pF
I75 IA13 U54A 270pF
I74 IA10 U54B 270pF
I73 IA7 U54C 270pF
I72 IA5 U54D 270pF
I71 IA2 U54E 270pF
I5 IREF- U54F 270pF
I2 IPROT U56B
I34 ISYSRDY U56A
68
U36B U36C U36D U36E U36F U36G U36H U36I U34B U34C U34D U34E U34F U34G U34H U34I U32B U32C U32D U32E U32F U32G U36C U36B
I85 I84 I83 I82 I81 I80 I77 I76 I28 I27 I26 I25 I24 I23 I22 I21 I20 I19 I18 I17 I16 I13 I12

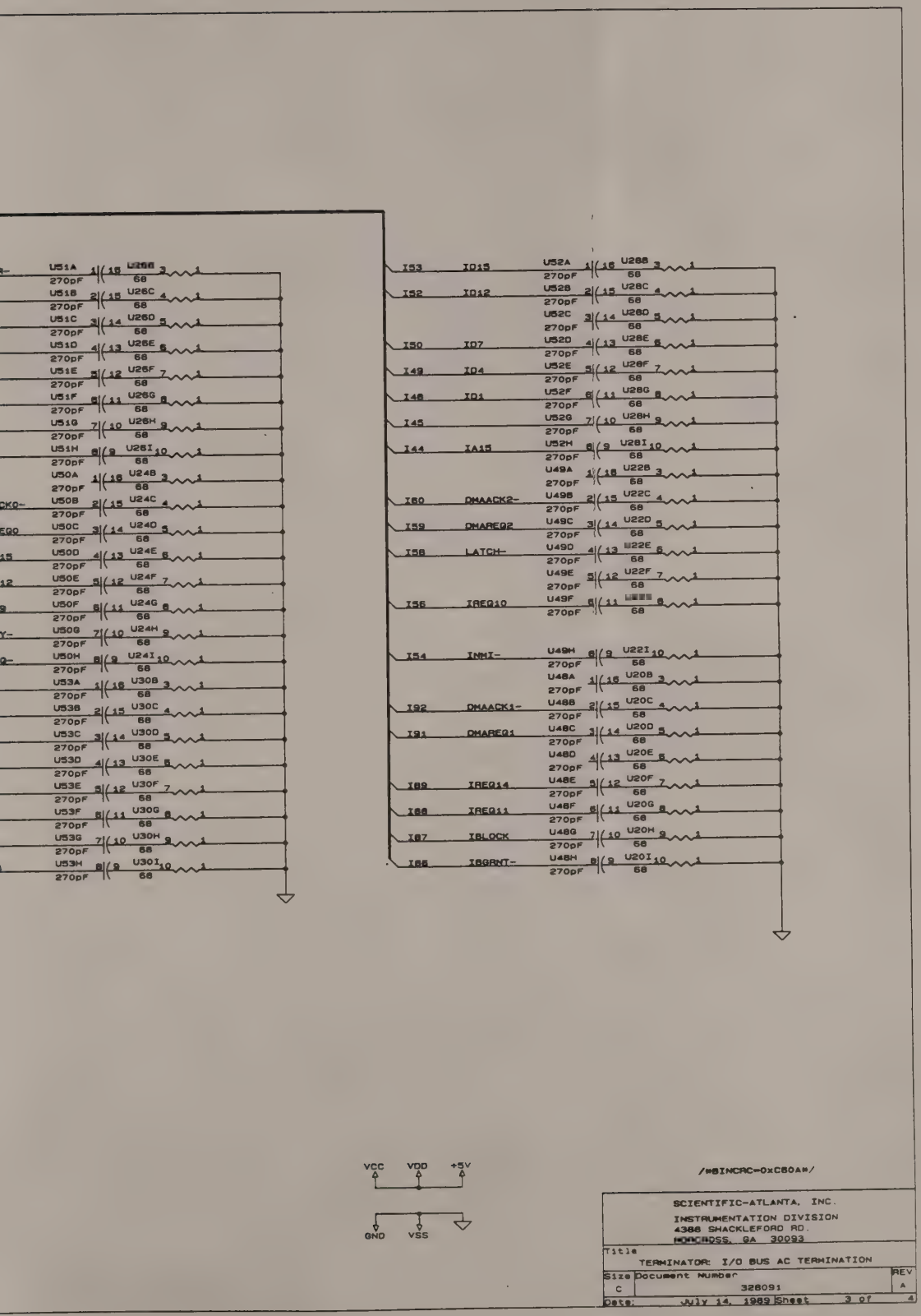
I53 ID15
I52 ID12
I50 ID7
I49 ID4
I48 ID1
I45
I44 IA15
I60 DMAACK2-
I59 DMAREQ2
I58 LATCH-
I56 IREQ10
I54 INMI-
I92 DMAACK1-
I91 DMAREQ1
I89 IREQ14
I88 IREQ11
I87 IBLOCK
I86 IBGRNT-
270pF
68
VCC VDD +5V
GND VSS
/*#INCRC=0xC80A*/
SCIENTIFIC-ATLANTA, INC.
INSTRUMENTATION DIVISION
4386 SHACKLEFORD RD.
NORCROSS, GA 30093
Title
TERMINATOR: I/O BUS AC TERMINATION
Size C
Document Number 328091
REV A
Date: July 14, 1989 Sheet 3 of 4

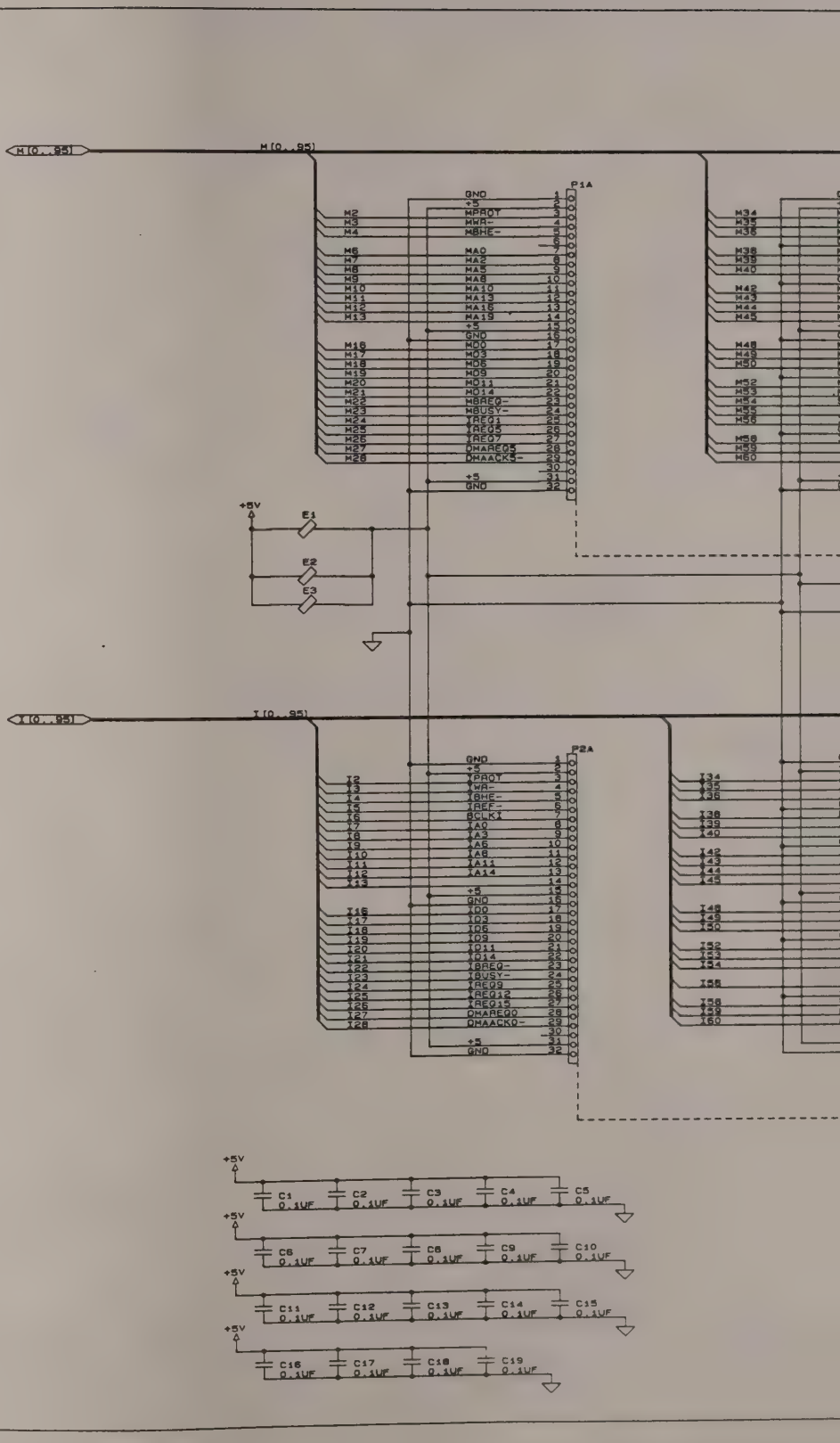
M[0..95]
P1A
GND
+5
MPROT
MWR-
MBHE-
MA0
MA2
MA5
MA8
MA10
MA13
MA15
MA19
MD0
MD3
MD6
MD9
MD11
MD14
MBREQ-
MBUSY-
IREQ1
IREQ4
IREQ7
DMAREQ3
DMAACK3-
M2
M3
M4
M6
M7
M8
M9
M10
M11
M12
M13
M16
M17
M18
M19
M20
M21
M22
M23
M24
M25
M26
M27
M28
M34
M35
M36
M38
M39
M40
M42
M43
M44
M45
M48
M49
M50
M52
M53
M54
M55
M56
M58
M59
M60
+5V
E1
E2
E3
I[0..95]
P2A
IPROT
IWR-
IBHE-
IREF-
BCLK1
IA0
IA3
IA6
IA8
IA11
IA14
ID0
ID3
ID6
ID9
ID11
ID14
IBREQ-
IBUSY-
IREQ9
IREQ12
IREQ15
DMAREQ0
DMAACK0-
I2
I3
I4
I5
I6
I7
I8
I9
I10
I11
I12
I13
I16
I17
I18
I19
I20
I21
I22
I23
I24
I25
I26
I27
I28
I34
I35
I36
I38
I39
I40
I42
I43
I44
I45
I48
I49
I50
I52
I53
I54
I58
I59
I60
C1 0.1UF
C2 0.1UF
C3 0.1UF
C4 0.1UF
C5 0.1UF
C6 0.1UF
C7 0.1UF
C8 0.1UF
C9 0.1UF
C10 0.1UF
C11 0.1UF
C12 0.1UF
C13 0.1UF
C14 0.1UF
C15 0.1UF
C16 0.1UF
C17 0.1UF
C18 0.1UF
C19 0.1UF

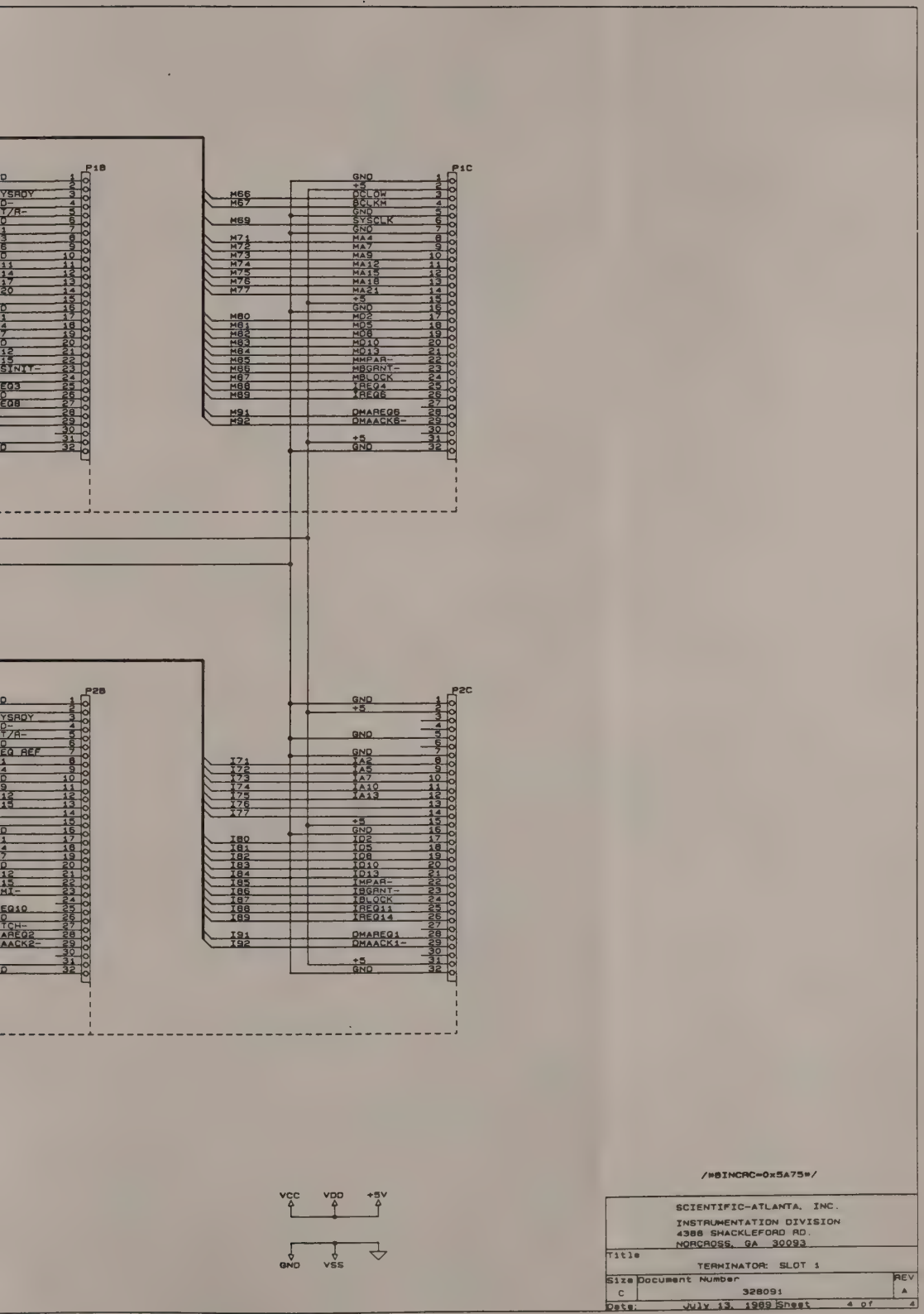

/*$INCRC=0x5A75*/

SCIENTIFIC-ATLANTA, INC.
INSTRUMENTATION DIVISION
4386 SHACKLEFORD RD.
NORCROSS, GA 30093

Title: TERMINATOR: SLOT 1

Size	Document Number	REV
C	328091	A

Date: July 13, 1989 Sheet 4 of 4

NOTES:

1. EITHER WIRE MAY BE INSTALLED INTO EITHER POSITION OF ITEM 2.

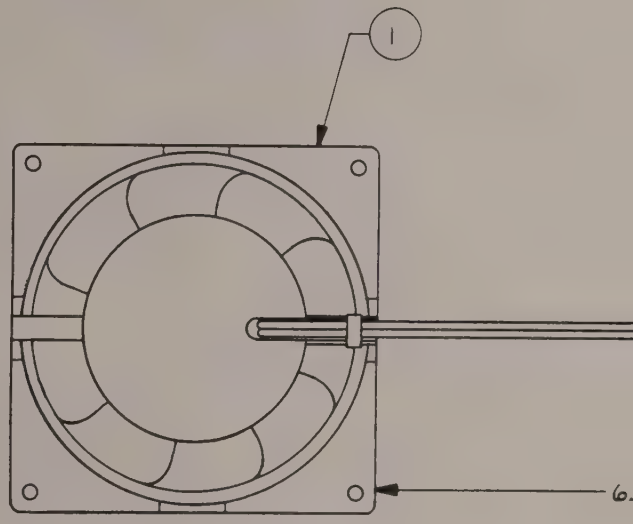

APPLICATION			REVISIONS				
QTY REQD	NEXT ASSY	USED ON	ZONE	REV	DESCRIPTION	DATE	APPROVED
1	306200	AT9000		-	INITIAL RELEASE		

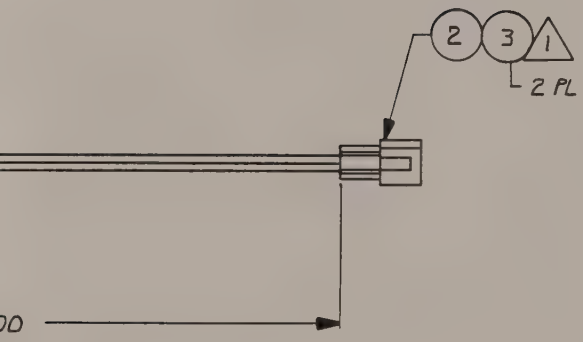

ITEM OR FIND NO.	QTY REQD	B-A STOCK NO.	NOMENCLATURE OR DESCRIPTION	MATL SPEC AND SIZE OR COMPONENT VALUE	IDENTIFYING OR PART NO	FSCM NO
3	2	84998	CONNECTOR CONTACT	18-24 AWG MALE	MOLEX 02-06-2103	
2	1	82617	CONNECTOR BODY	2 POS PLUG	MOLEX 03-06-2023	
1	1	177347	FAN, TUBE AXIAL	3.62 INCH SQUARE 115 VAC 50/60 Hz	EBM W2S086-AA07-01	

PARTS LIST

UNLESS OTHERWISE SPECIFIED ALL CAPACITORS ARE IN MICROFARADS AND ALL RESISTORS ARE IN OHMS ±10% AND 1/4 WATT

LAST REFERENCE DESIGNATION USED

C	CR	J	R
Q	R	S	U

ALL DIMENSIONS ARE IN INCHES UNLESS OTHERWISE SPECIFIED

TOLERANCES
3 PLACE DECIMAL ± .005
2 PLACE DECIMAL ± .02
1 PLACE DECIMAL ± 1

FRACTIONS ± ANGLES ±2°

MAX SURFACE ROUGHNESS ALL MACHINED SURFACES EXCEPT AS NOTED 125

BREAK SHARP EDGES AND CORNERS .010 MAX

FINISH NONE

CONTRACT NO

DWN	Ted Smith	11-16-88
ENGR	M. Jones	11/7/88
CHK	[illegible]	12-1-88
PROD	[illegible]	12-6-88
APVD	[illegible]	
APVD		

Scientific-Atlanta 3845 Pleasantdale Road Atlanta, Georgia 30340

FAN ASSEMBLY

SIZE	FSCM NO	DWG NO	REV
C	10110	306180	-

SCALE 1/1 SHEET 1 OF 1

306180 ON DWG

5-56

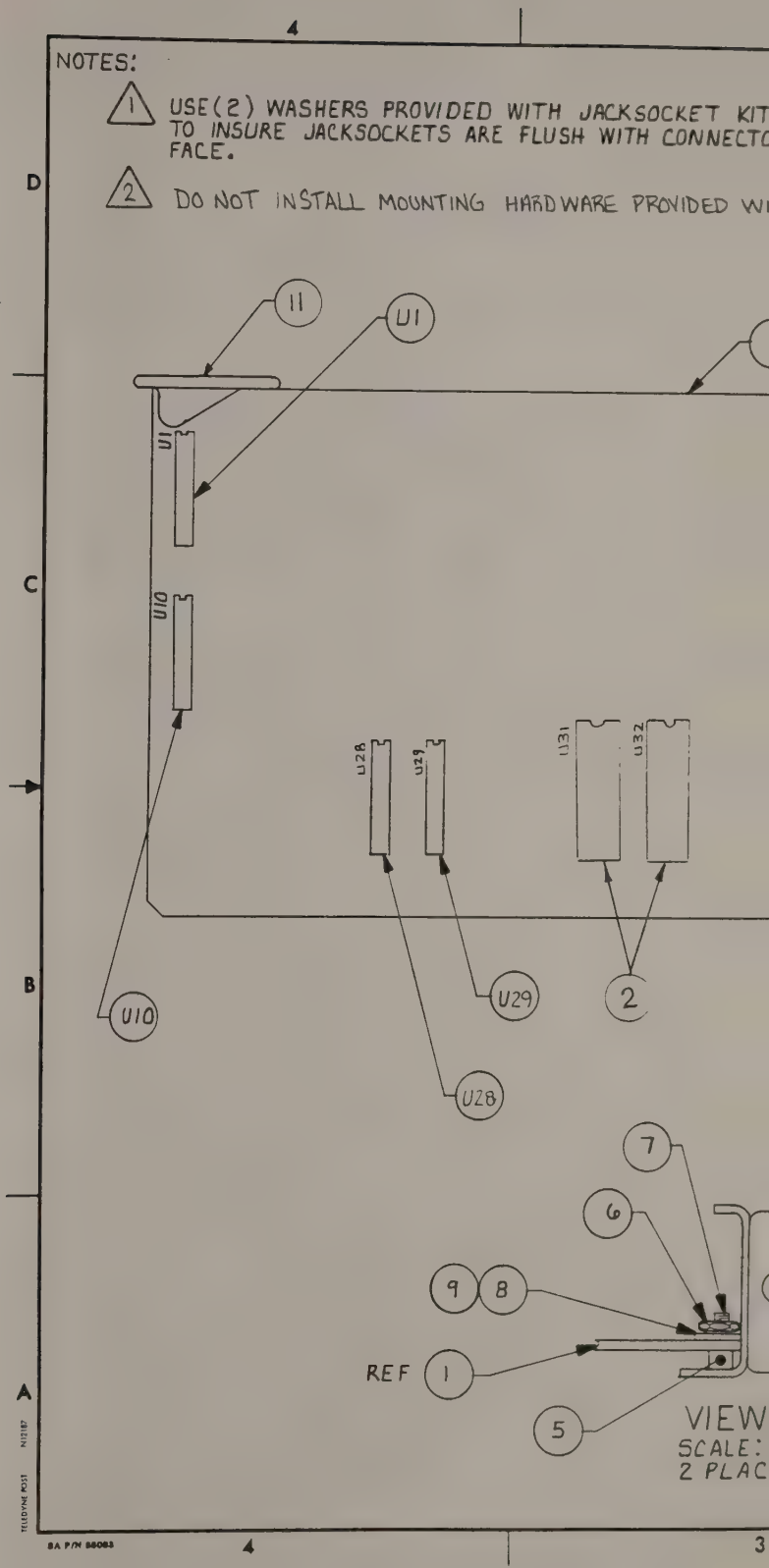
4
NOTES:
1 USE(2) WASHERS PROVIDED WITH JACKSOCKET KIT
TO INSURE JACKSOCKETS ARE FLUSH WITH CONNECTO
FACE.
2 DO NOT INSTALL MOUNTING HARDWARE PROVIDED WI
D
C
B
A
11
U1
U10
U28
U29
U31
U32
2
7
6
9
8
REF
1
5
VIEW
SCALE:
2 PLAC
TELEDYNE POST
SA P/N 86083
4
3

APPLICATION		
QTY REQD	NEXT ASSY	USED ON
1	306200	AT 9000

REVISIONS				
ZONE	REV	DESCRIPTION	DATE	APPROVED
	-	INITIAL RELEASE		
	A	ECO NO. 10482	4/28/89	[illegible]
	B	ECO NO. 10572 ADDED SH 2	4/28/89	[illegible]
	C	ECO 10576	4/28/89	[illegible]
	D	ECO 10624	6/1/89	[illegible]
	E	ECO NO. 10664	6/6/89	[illegible]
	F	ECO NO. 10672	6/13/89	[illegible]
	G	ECO 10758 ADDED SHT 3	10/11/89	[illegible]
	H	ECO 10825	10/11/89	[illegible]
	J	ECO 10795-97, 10871-872	11/14/89	[illegible]
	K	ECO 10945	2/8/90	[illegible]
	L	ECO 11003	7/10/90	[illegible]
	M	ECO 11135	7/10/90	[illegible]
	N	ECO 11174	7/10/90	[illegible]
	P	ECO'S 11131, 11351, 11365	2/1/91	[illegible]
	R	ECO 12722	2/1/91	[illegible]
	T	INC ECR 15029, RMW 6-20-91	6/28/91	[illegible]

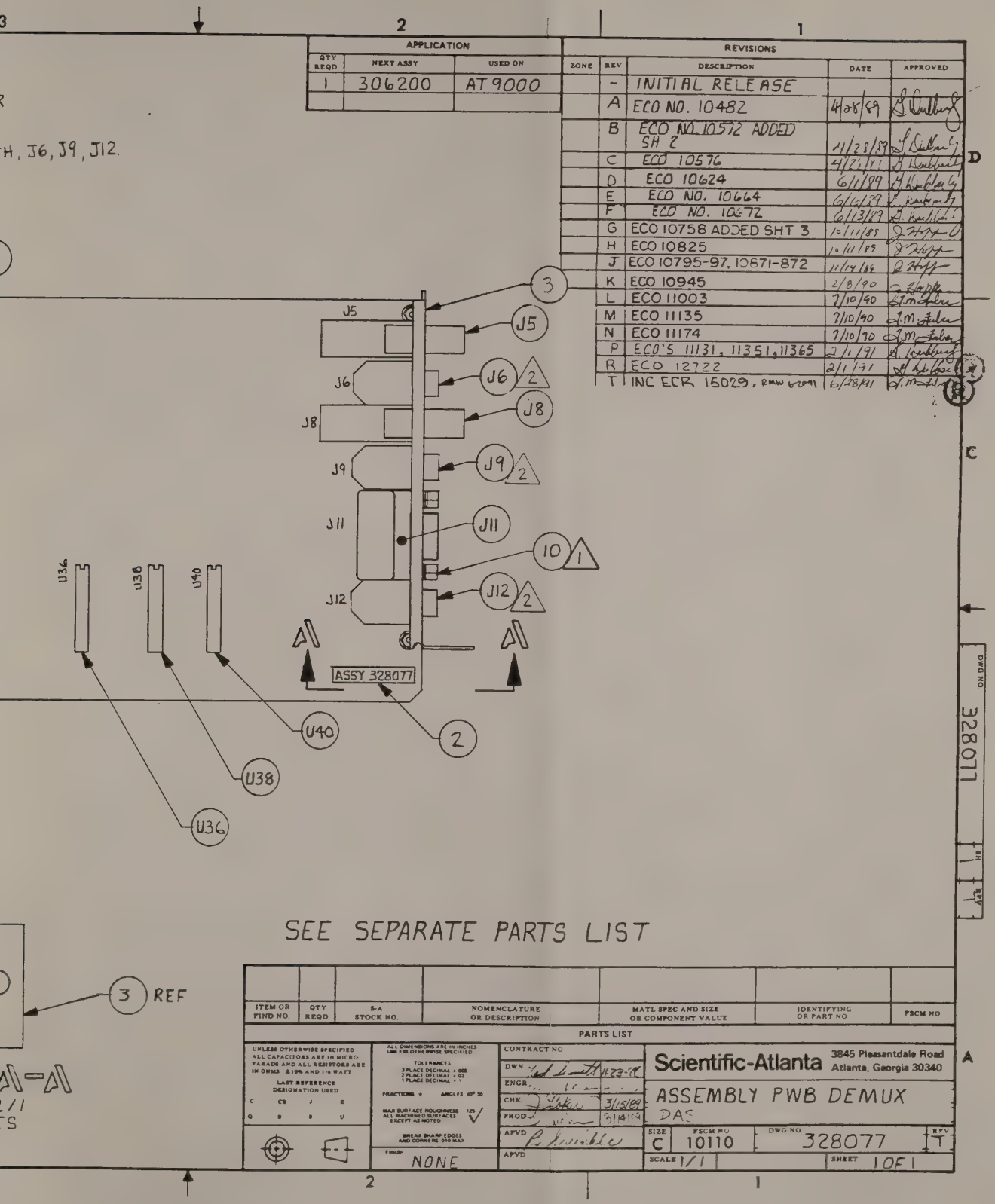

SEE SEPARATE PARTS LIST

ITEM OR FIND NO.	QTY REQD	S-A STOCK NO.	NOMENCLATURE OR DESCRIPTION	MATL SPEC AND SIZE OR COMPONENT VALUE	IDENTIFYING OR PART NO	FSCM NO

PARTS LIST

UNLESS OTHERWISE SPECIFIED ALL CAPACITORS ARE IN MICROFARADS AND ALL RESISTORS ARE IN OHMS ±10% AND 1/4 WATT

LAST REFERENCE DESIGNATION USED

C CR J E
Q R S U

ALL DIMENSIONS ARE IN INCHES UNLESS OTHERWISE SPECIFIED

TOLERANCES
2 PLACE DECIMAL ± .005
2 PLACE DECIMAL ± .02
1 PLACE DECIMAL ± .1

FRACTIONS ± ANGLES 45° 30'

MAX SURFACE ROUGHNESS 125
ALL MACHINED SURFACES EXCEPT AS NOTED

BREAK SHARP EDGES AND CORNERS .010 MAX

FINISH NONE

CONTRACT NO
DWN [illegible] 11-23-88
ENGR [illegible]
CHK [illegible] 3/15/89
PROD [illegible] 3/14/89
APVD [illegible]
APVD

Scientific-Atlanta 3845 Pleasantdale Road Atlanta, Georgia 30340

ASSEMBLY PWB DEMUX
DAS

SIZE C | FSCM NO 10110 | DWG NO 328077 | REV T
SCALE 1/1 | SHEET 1 OF 1

DWG NO. 328077 SH 1 REV T

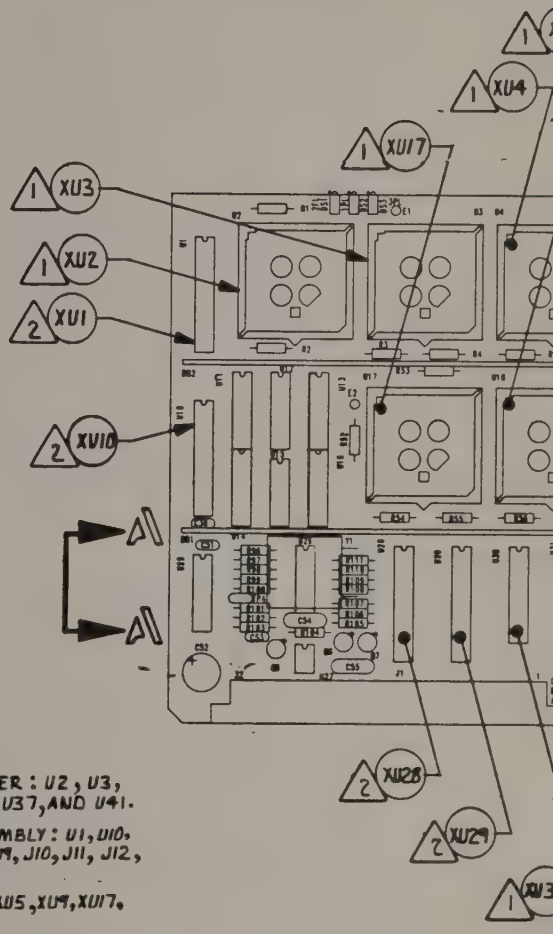

NOTES:

1. INSTALL THE FOLLOWING AFTER WAVE SOLDER: U2, U3, U4, U5, U9, U17, U18, U19, U24, U30, U33, U34, U35, U37, AND U41.
2. INSTALL THE FOLLOWING AT NEXT HIGHER ASSEMBLY: U1, U10, U28, U29, U31, U32, U36, U38, U40, J5, J6, J7, J8, J9, J10, J11, J12, J13, AND J15.
3. NOTE LOCATION OF PIN 1 ON ITEMS XU2, XU3, XU4, XU5, XU9, XU17, XU18, XU19, AND XU24.
4. ADD ITEM 2 TO Y1 BEFORE MOUNTING ON PWB. (SEE VIEW A-A)
5. PREP Q1 WITH LONG LEG TO RIGHT CUT TOP EMITTER LEAD OFF AT BODY. (SEE VIEW B)
6. INSTALL J19 WITH ONE SPACER ITEM 5 AS SHOWN PER "VIEW C" ORIENT AS SHOWN ON DRAWING.
7. ORIENT J16 AS SHOWN ON DRAWING.
8. INSTALL W1 WITH SIDE EXIT CABLE POSITIONED AS SHOWN. ON J16 TURN WIRE DOWN TOWARDS PWB.

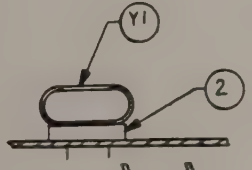

VIEW A1-A1
SCALE: NONE

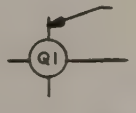

VIEW B
SCALE: NONE

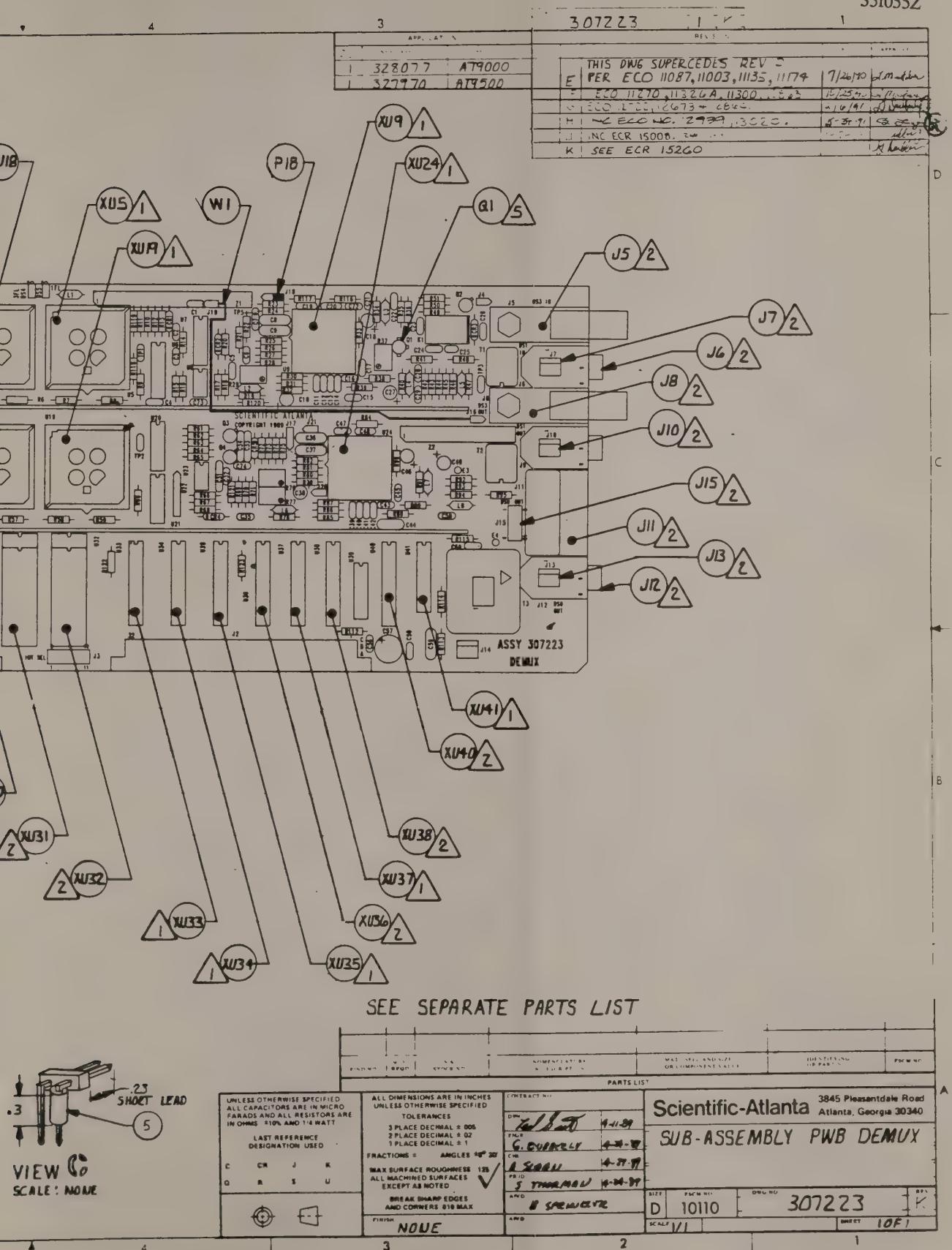
307223
1 328077 AT9000
1 327970 AT9500
E THIS DWG SUPERCEDES REV 5 PER ECO 11087, 11003, 11135, 11174 7/26/90
F ECO 11270, 11326A, 11300, 11363
G ECO 12700, 12673 + 12866
H INC ECO NO. 2939, 13020
J INC ECR 15008
K SEE ECR 15260
XU9 1
XU24 1
P18
W1
XU5 1
XU19 1
Q1 5
J5 2
J7 2
J6 2
J8 2
J10 2
J15 2
J11 2
J13 2
J12 2
SCIENTIFIC ATLANTA
COPYRIGHT 1989
ASSY 307223
DEMUX
XU41 1
XU40 2
XU38 2
XU37 1
XU36 2
XU35 1
XU34 1
XU33 1
XU32 2
XU31 2
SEE SEPARATE PARTS LIST
PARTS LIST
.23 SHORT LEAD
.3
5
VIEW C
SCALE: NONE
UNLESS OTHERWISE SPECIFIED ALL CAPACITORS ARE IN MICRO FARADS AND ALL RESISTORS ARE IN OHMS ±10% AND 1/4 WATT
LAST REFERENCE DESIGNATION USED
C CR J K
Q R S U
ALL DIMENSIONS ARE IN INCHES UNLESS OTHERWISE SPECIFIED
TOLERANCES
3 PLACE DECIMAL ± .005
2 PLACE DECIMAL ± .02
1 PLACE DECIMAL ± .1
FRACTIONS ± ANGLES ±0° 30'
MAX SURFACE ROUGHNESS 125
ALL MACHINED SURFACES EXCEPT AS NOTED
BREAK SHARP EDGES AND CORNERS .010 MAX
FINISH NONE
CONTRACT NO
DWN 4-11-89
ENGR G. CUDDERLY 4-24-89
CHK A. SLOAN 4-27-89
PROJ S. THORMAN 4-24-89
APVD B. SPRINGER
APVD
Scientific-Atlanta
3845 Pleasantdale Road
Atlanta, Georgia 30340
SUB-ASSEMBLY PWB DEMUX
SIZE D
FSCM NO 10110
DWG NO 307223
REV K
SCALE 1/1
SHEET 1 OF 1

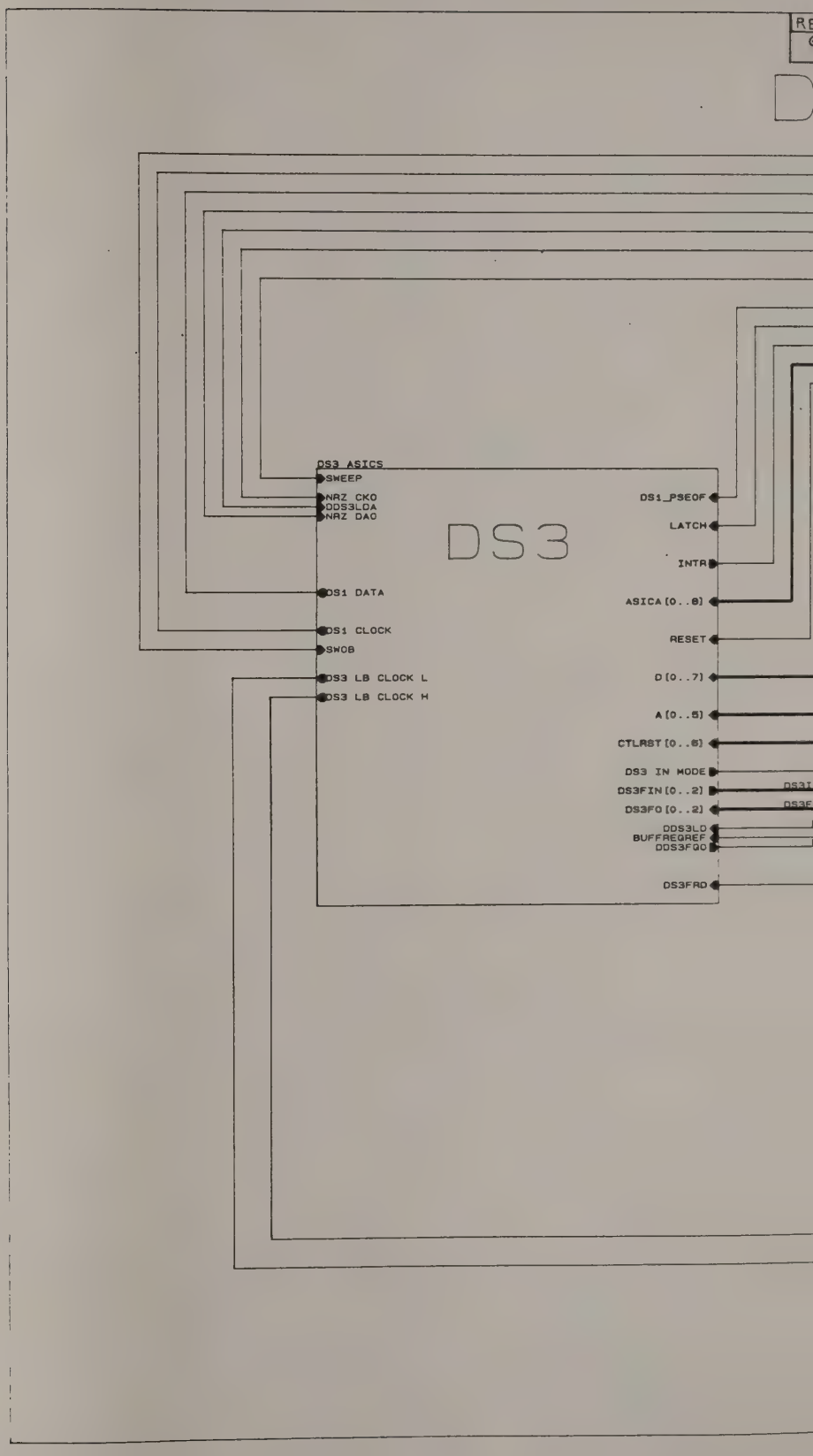
DS3 ASICS
SWEEP
NRZ CKO
DDS3LDA
NRZ DAO
DS3
DS1 DATA
DS1 CLOCK
SWOB
DS3 LB CLOCK L
DS3 LB CLOCK H
DS1_PSEOF
LATCH
INTR
ASICA[0..8]
RESET
D[0..7]
A[0..5]
CTLRST[0..6]
DS3 IN MODE
DS3FIN[0..2]
DS3FO[0..2]
DDS3LD
BUFFREQREF
DDS3FQO
DS3FRD

V	DESCRIPTION	DATE	APVD
	INC ECR'S 12673, 12939, & 13020	3-30-9	

APPLICATION			QTY REQD
NEXT ASSY	USED ON		0

REVISIONS				
ZONE	REV	DESCRIPTION	DATE	APVD
	B	SEE ECO 10909	12-13-90	T.M.FABER
	C	SEE ECO 10941	2-13-90	T.M.FABER
	D	SEE ECO 11135	6-14-90	T.M.FABER
	E	SEE ECO 11270	10-24-90	T.M.FABER
	F	SEE ECO 11326A	5/14/91	T.M.FABER

DEMUX

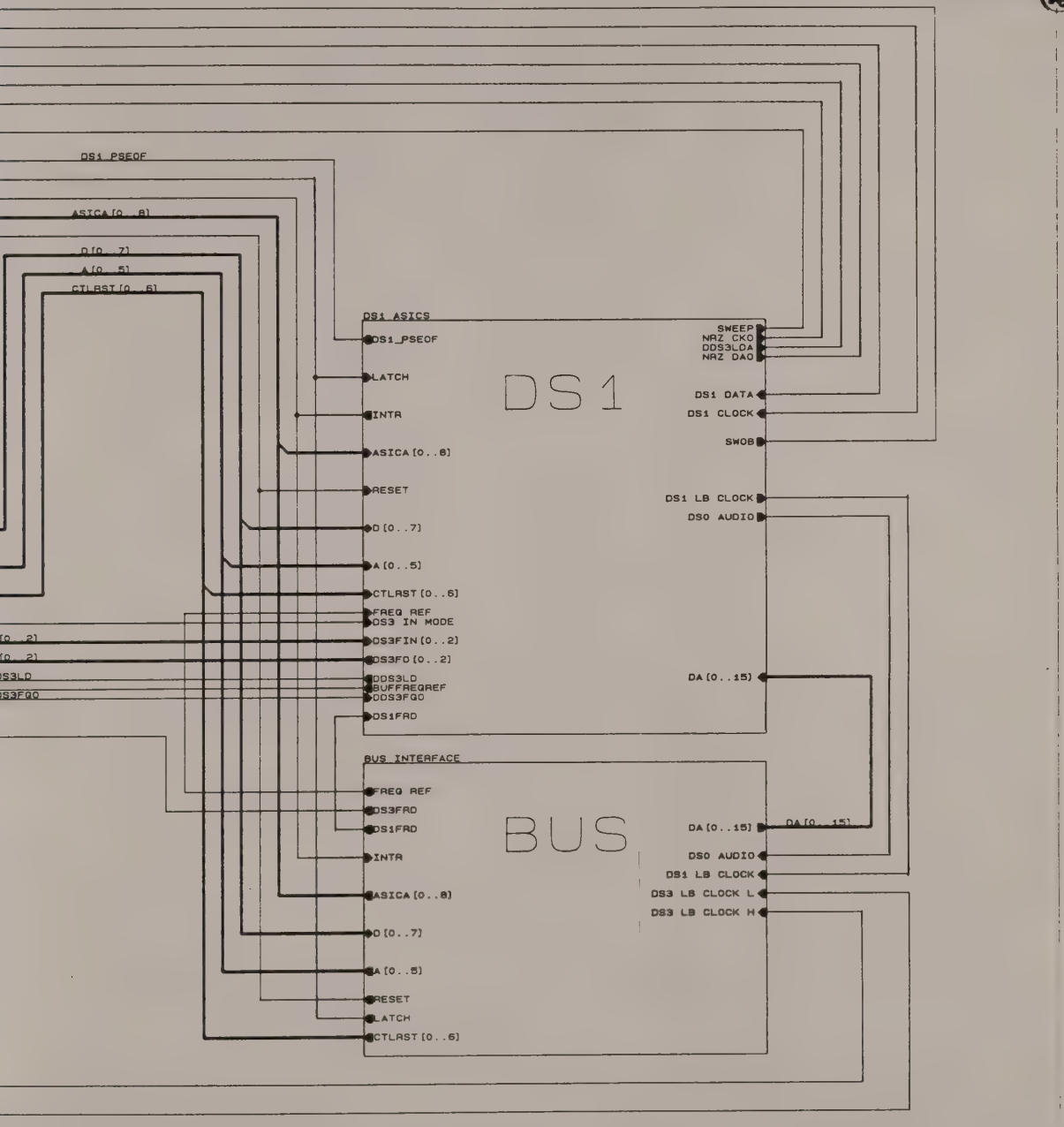

/*$INCRC=0x2B03*/

DWN	N. KAYTON	6-2-89
ENGR	THOMAS M. FABER	6-14-90
CHK	JANICE F. COKER	6-14-90
PROD	JAMES L. HOLLAND	6-14-90
APVD		
APVD		

SCIENTIFIC-ATLANTA, INC.
INSTRUMENTATION DIVISION
4386 SHACKLEFORD RD.
NORCROSS, GA 30093

Title: DEMUX CARD: TOP LEVEL

Size	Document Number	REV
C	307221	G

Date: December 10, 1990 Sheet 1 of 11

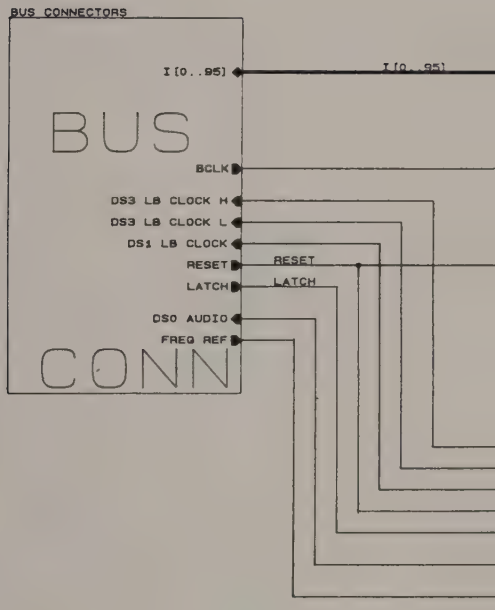
BUS CONNECTORS
I[0..95]
BUS
BCLK
DS3 LB CLOCK H
DS3 LB CLOCK L
DS1 LB CLOCK
RESET
LATCH
DS0 AUDIO
FREQ REF
CONN
I[0..95]
RESET
LATCH

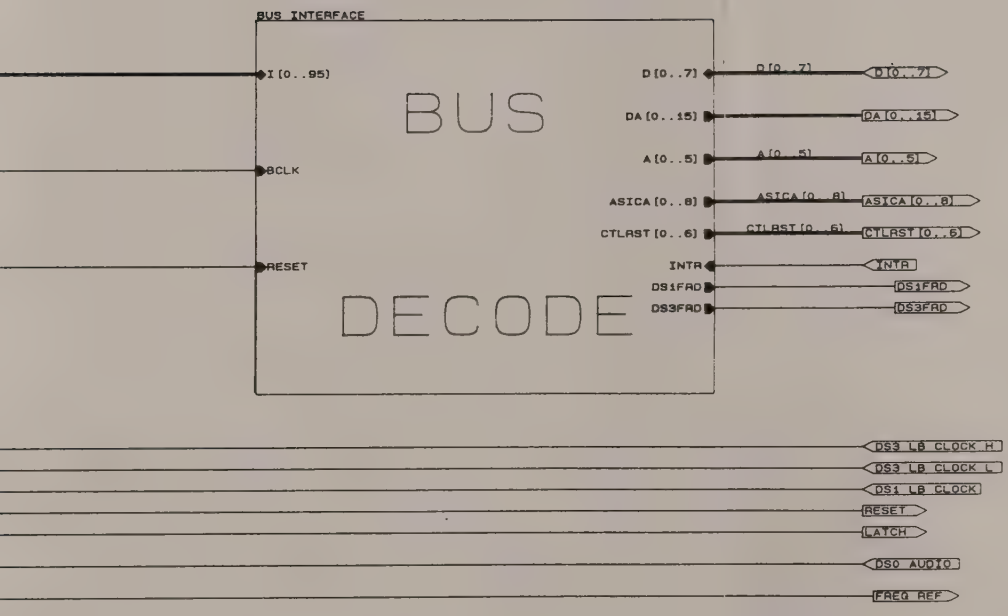

/*$INCRC=0x9ED9*/

SCIENTIFIC-ATLANTA, INC.
INSTRUMENTATION DIVISION
4388 SHACKLEFORD RD.
NORCROSS, GA 30093

Title
DEMUX CARD: BUS INTERFACE INTERCONNECT

Size	Document Number	REV
C	307221	G

Date: December 10, 1990 Sheet 2 of 11

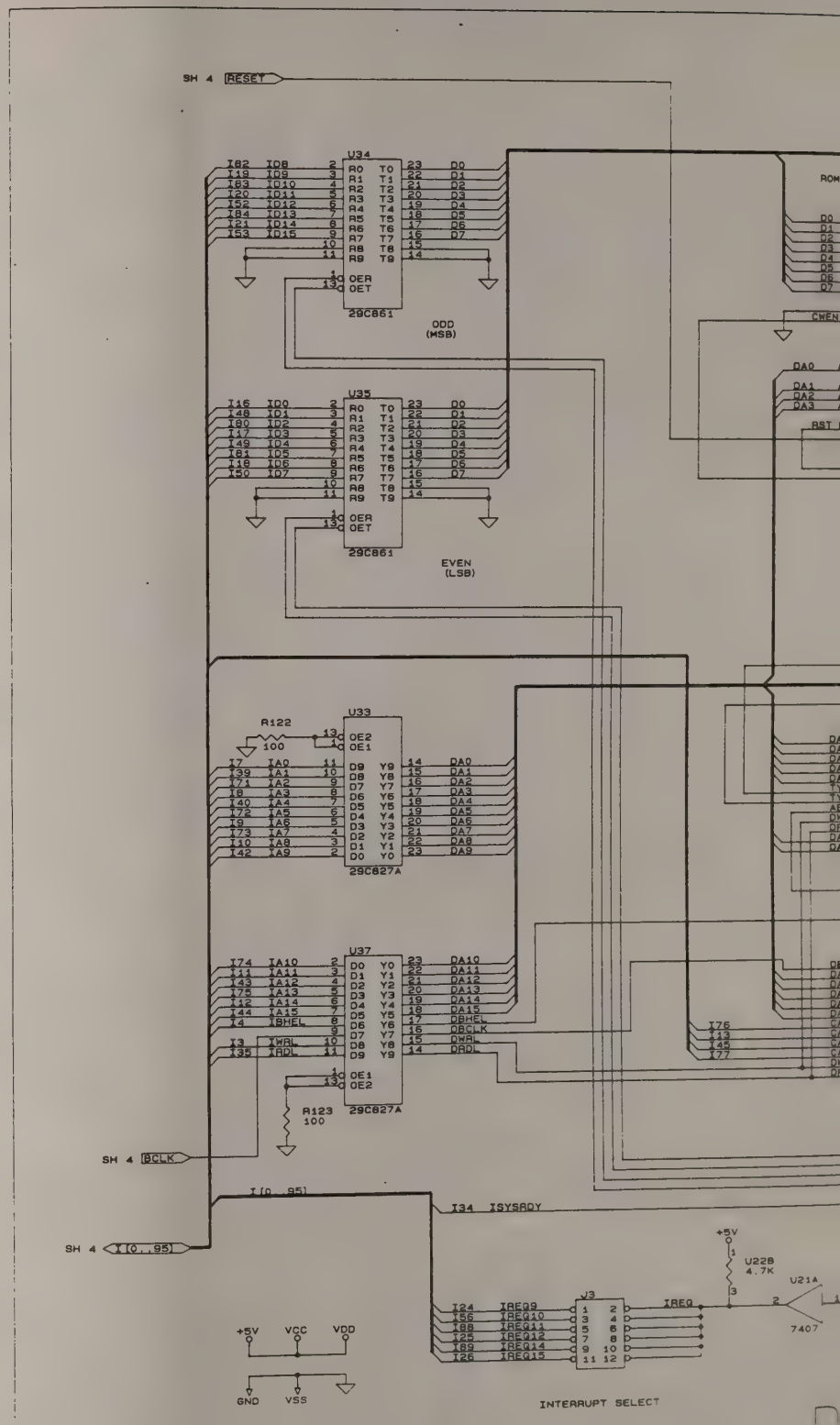
SH 4 RESET
U34
29C861
DDD (MSB)
U35
29C861
EVEN (LSB)
R122 100
U33
29C827A
U37
29C827A
R123 100
SH 4 BCLK
I[0..95]
SH 4 I[0..95]
I34 ISYSRDY
+5V
U22B 4.7K
U21A
7407
U3
IREQ
INTERRUPT SELECT
+5V VCC VDD
GND VSS
ROM
CWEN
RST

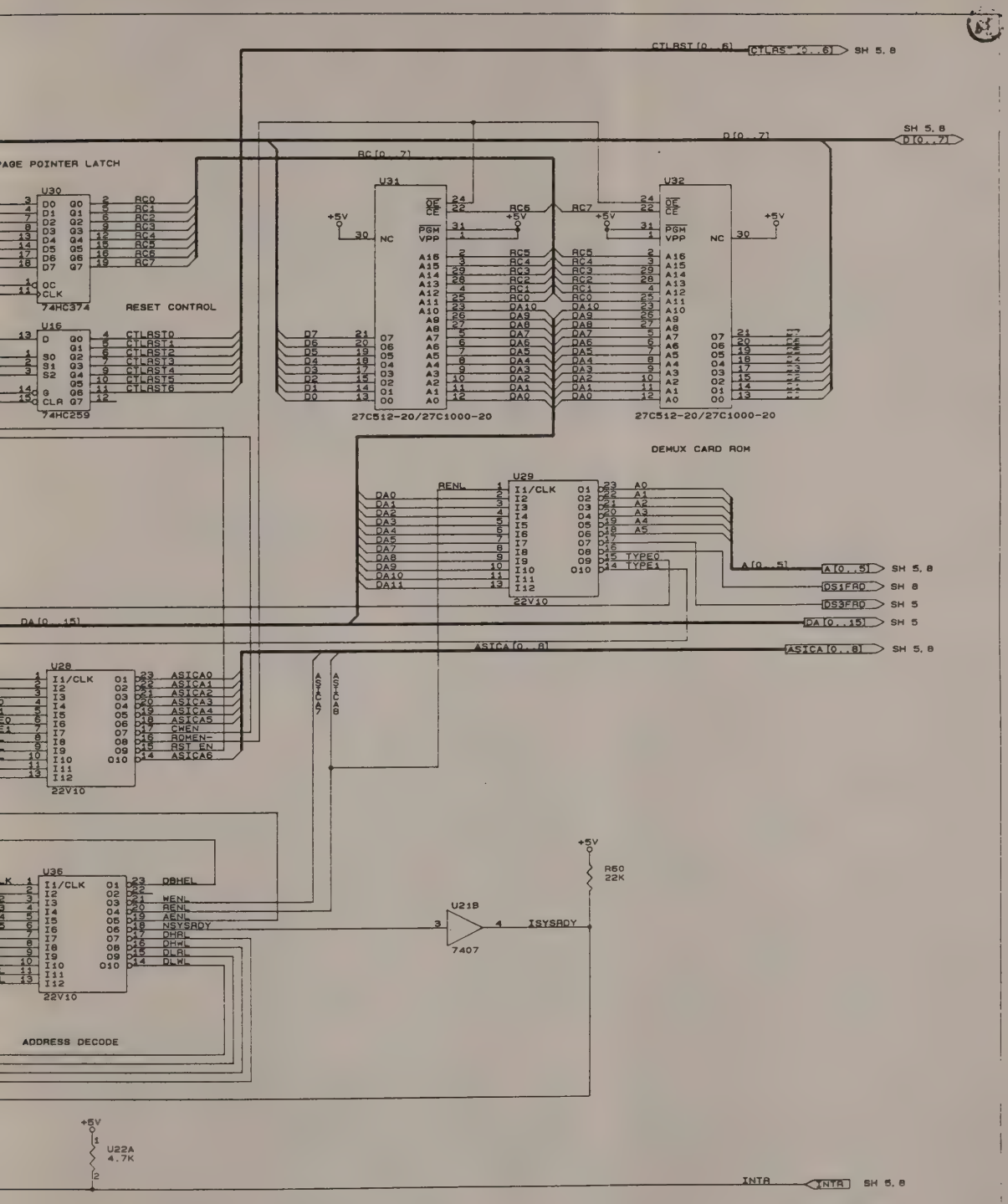

EMUX DECODE LOGIC

DEMUX

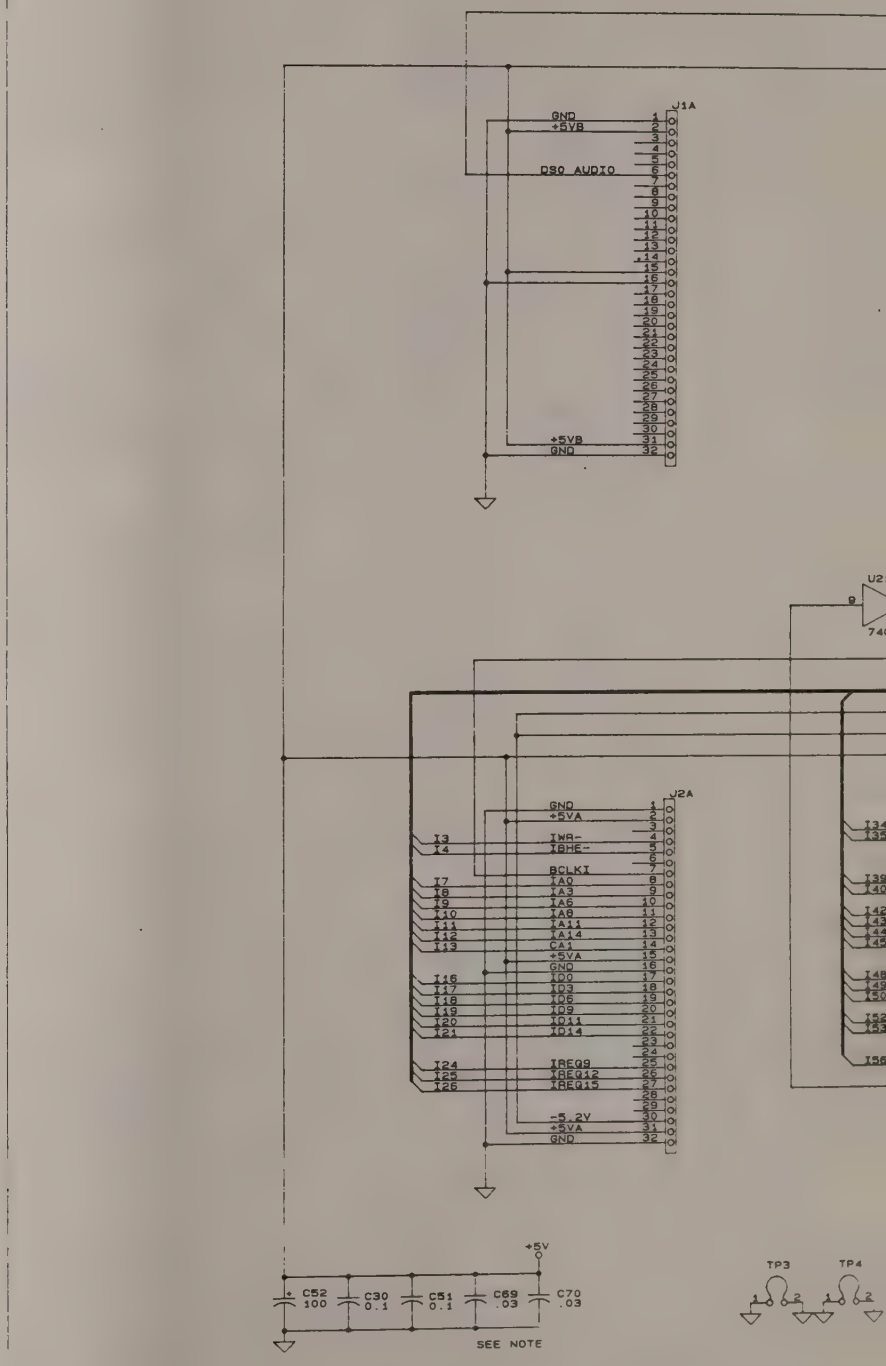

NOTE:
C69 AND C70 ARE LOCATED UNDERNEATH INTEGRATED CIRCUITS.

BUS CONNECTORS

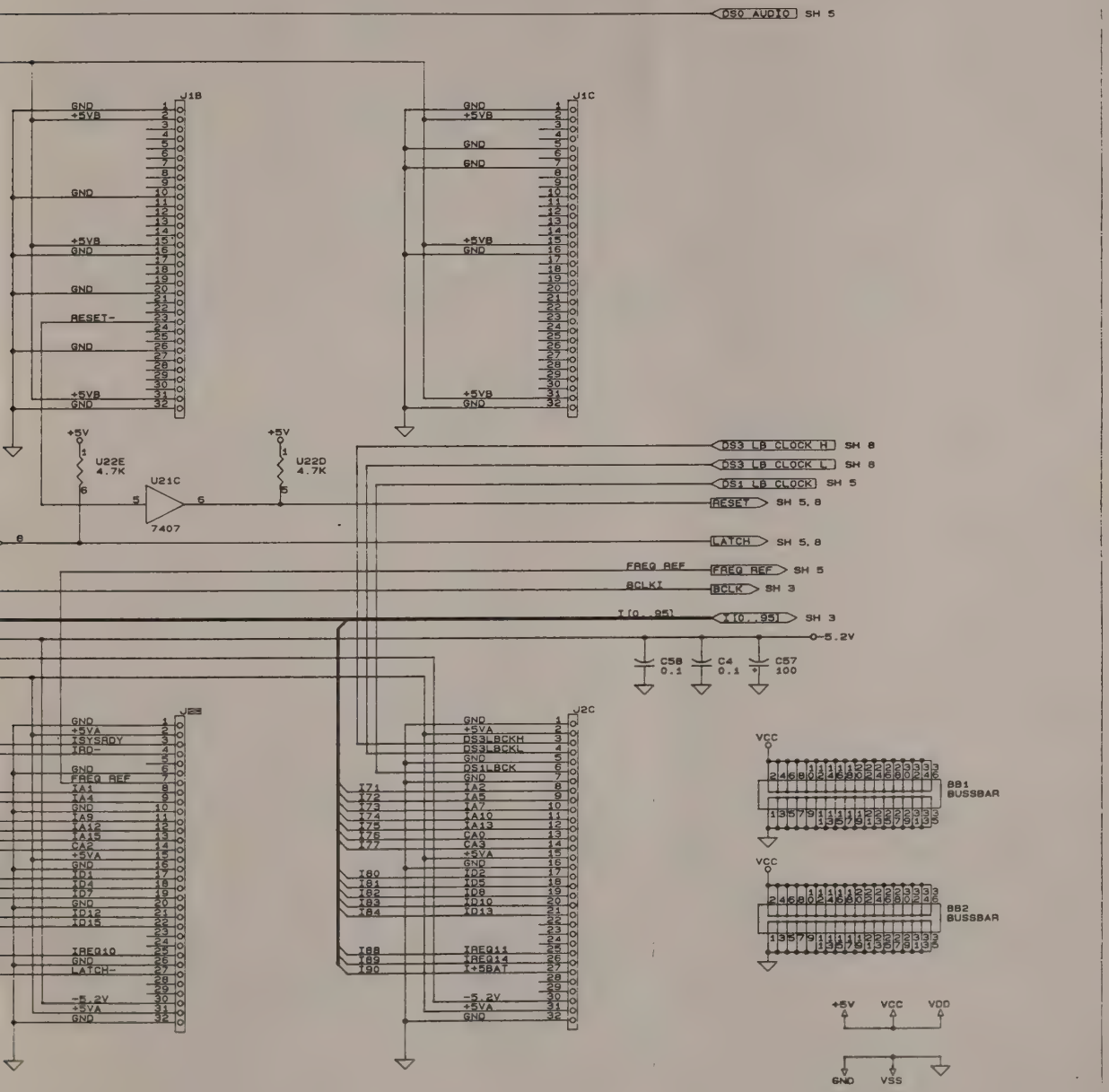

/*BINCRC=0xFDE3*/

SCIENTIFIC-ATLANTA, INC INSTRUMENTATION DIVISION 4386 SHACKLEFORD RD NORCROSS, GA 30093		
Title: DEMUX: BUS CONNECTOR WIRING		
Size: C	Document Number: 307221	REV: G
Date: December 10, 1990	Sheet 4 of 11	

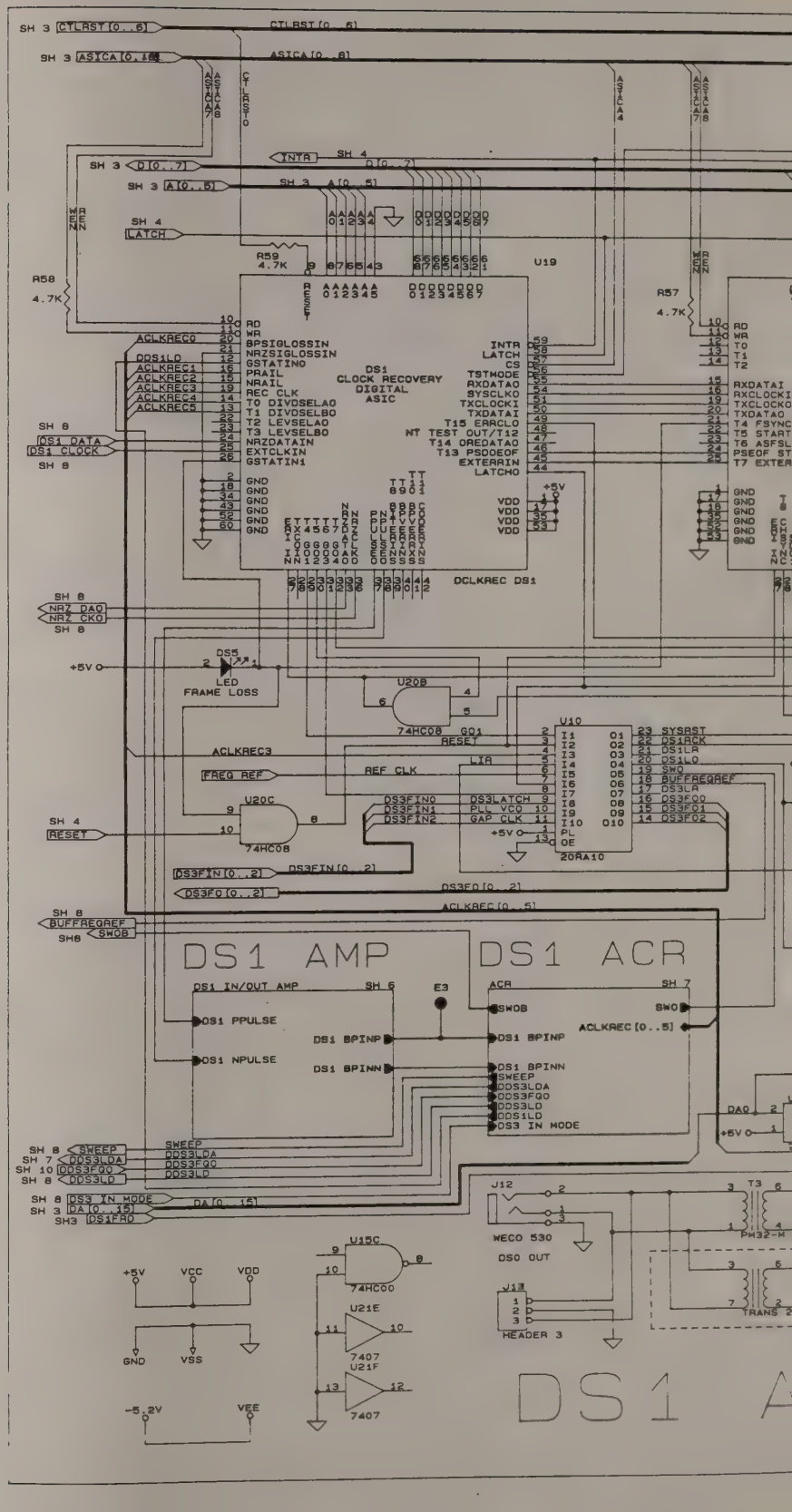

DS1 AMP
DS1 ACR
DS1 CLOCK RECOVERY DIGITAL ASIC
DCLKREC DS1
LED FRAME LOSS
74HC08
20RA10
WECO 530
DS0 OUT
HEADER 3
7407

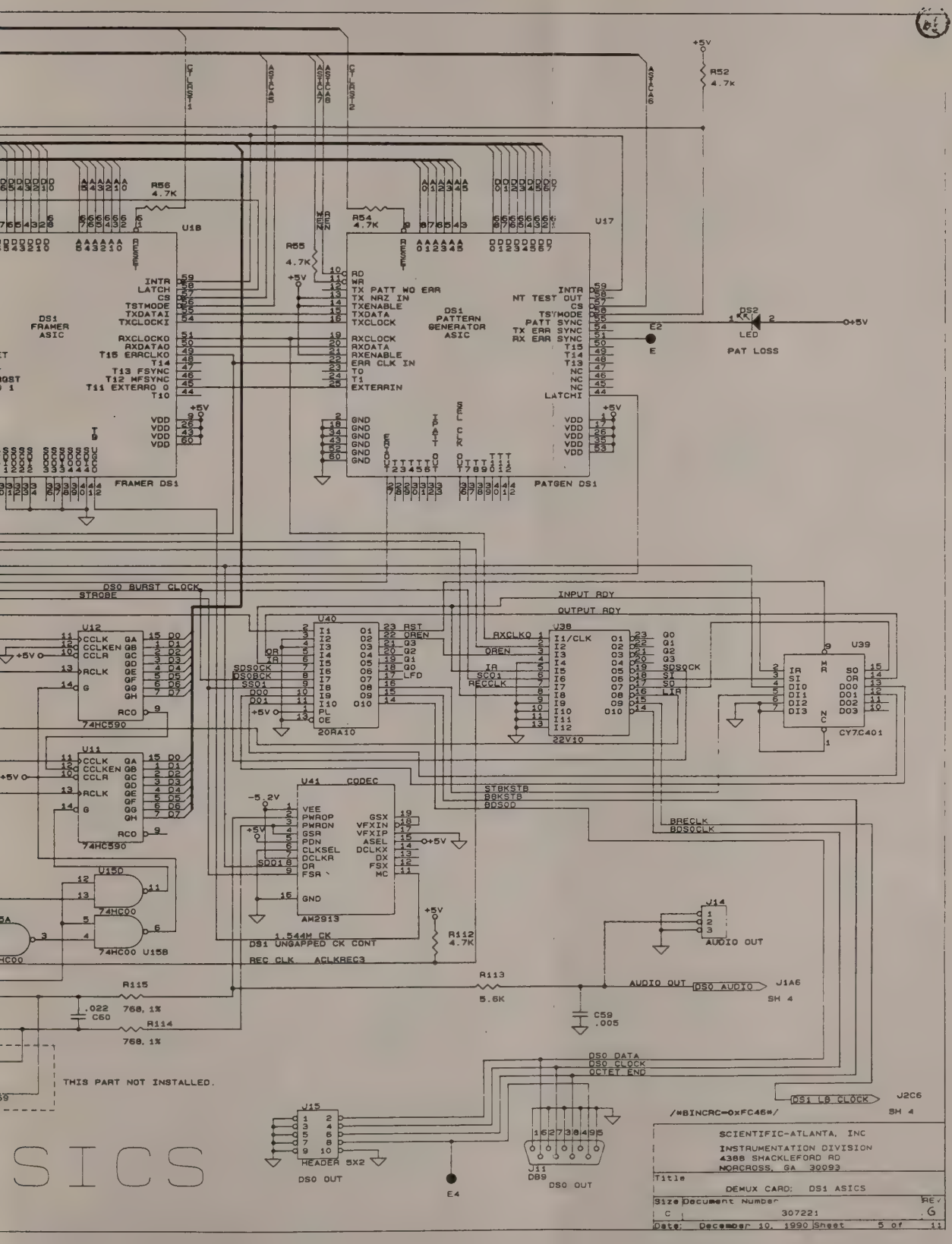
R52
4.7k
R56
4.7K
R54
4.7K
R55
4.7K
U18
U17
DS1
FRAMER
ASIC
DS1
PATTERN
GENERATOR
ASIC
DS2
LED
PAT LOSS
FRAMER DS1
PATGEN DS1
DS0 BURST CLOCK
STROBE
INPUT RDY
OUTPUT RDY
U12
U11
74HC590
U40
20RA10
U38
22V10
U39
CY7C401
U41
CODEC
AM2913
1.544M CK
DS1 UNGAPPED CK CONT
REC CLK
ACLKREC3
74HC00
U15D
U15B
R112
4.7K
R113
5.6K
R115
.022
C60
768, 1%
R114
768, 1%
C59
.005
AUDIO OUT
DS0 AUDIO
J1A6
SH 4
J14
THIS PART NOT INSTALLED.
DS0 DATA
DS0 CLOCK
OCTET END
DS1 LB CLOCK
J2C6
/#BINCRC=0xFC46#/
SH 4
U15
HEADER 5X2
DS0 OUT
J11
DB9
DS0 OUT
E4
SCIENTIFIC-ATLANTA, INC
INSTRUMENTATION DIVISION
4386 SHACKLEFORD RD
NORCROSS, GA 30093
Title
DEMUX CARD: DS1 ASICS
Size C
Document Number 307221
REV G
Date: December 10, 1990 Sheet 5 of 11

DS1

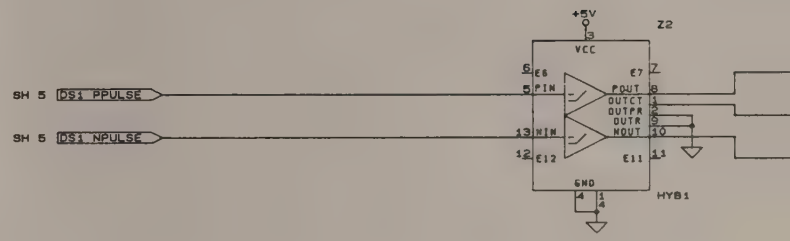

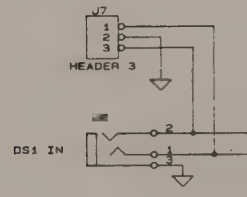

NOTE: THE FOLLOWING PARTS ARE NOT USED ON THIS BOARD

J6, J9

IN/OUT AMP

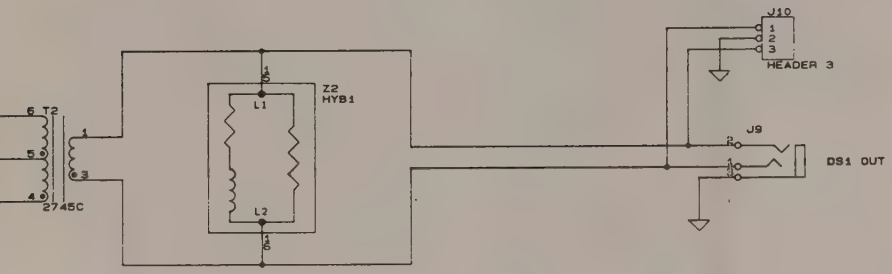

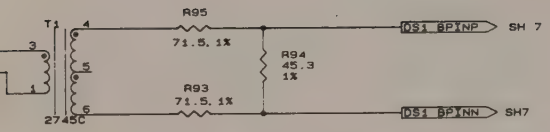

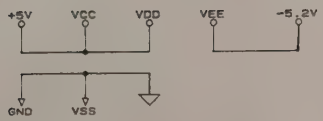

/*$INCRC=0xBACA*/

SCIENTIFIC-ATLANTA, INC INSTRUMENTATION DIVISION 4368 SHACKLEFORD RD NORCROSS, GA 30093		
Title: DEMUX CARD: DS1 OUTPUT AMP		
Size: C	Document Number: 307221	REV: G
Date: December 10, 1990	Sheet 6 of 11	

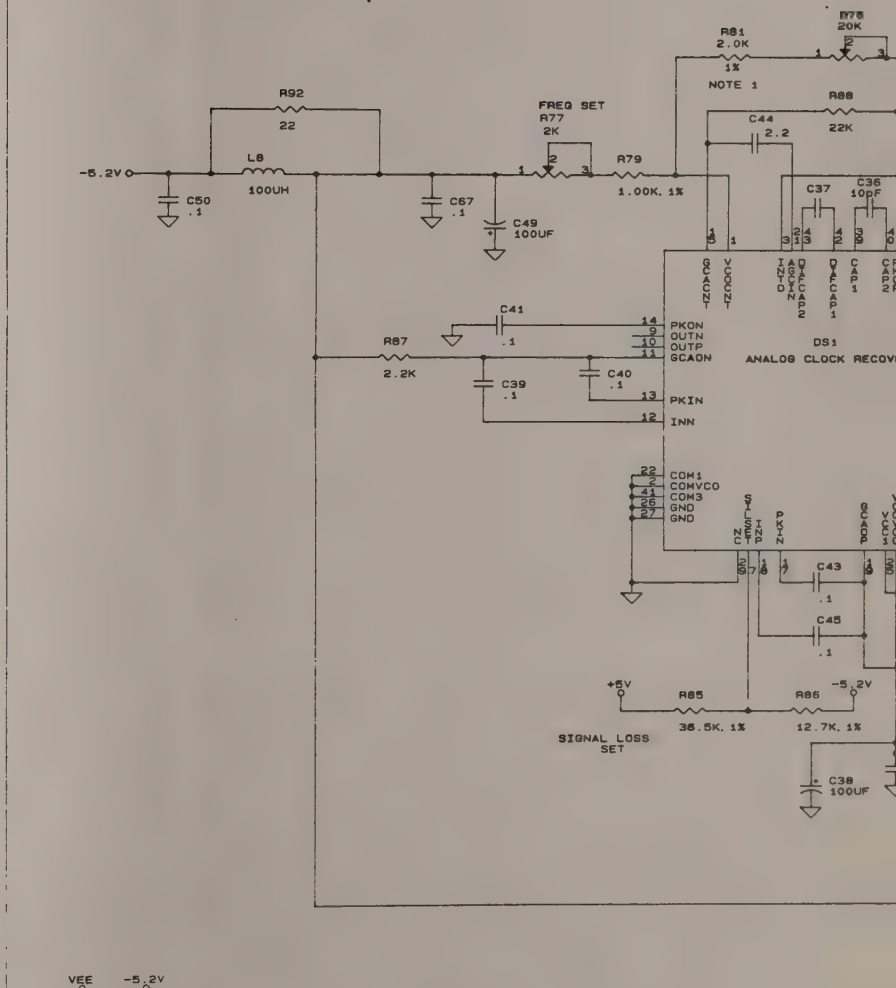

VEE -5.2V

DS1 ANALOG CL

NOTES:
1. THE VALUES FOR R81 & R75 ARE NOMINAL VALUES. THESE ARE SELECTED AT TEST

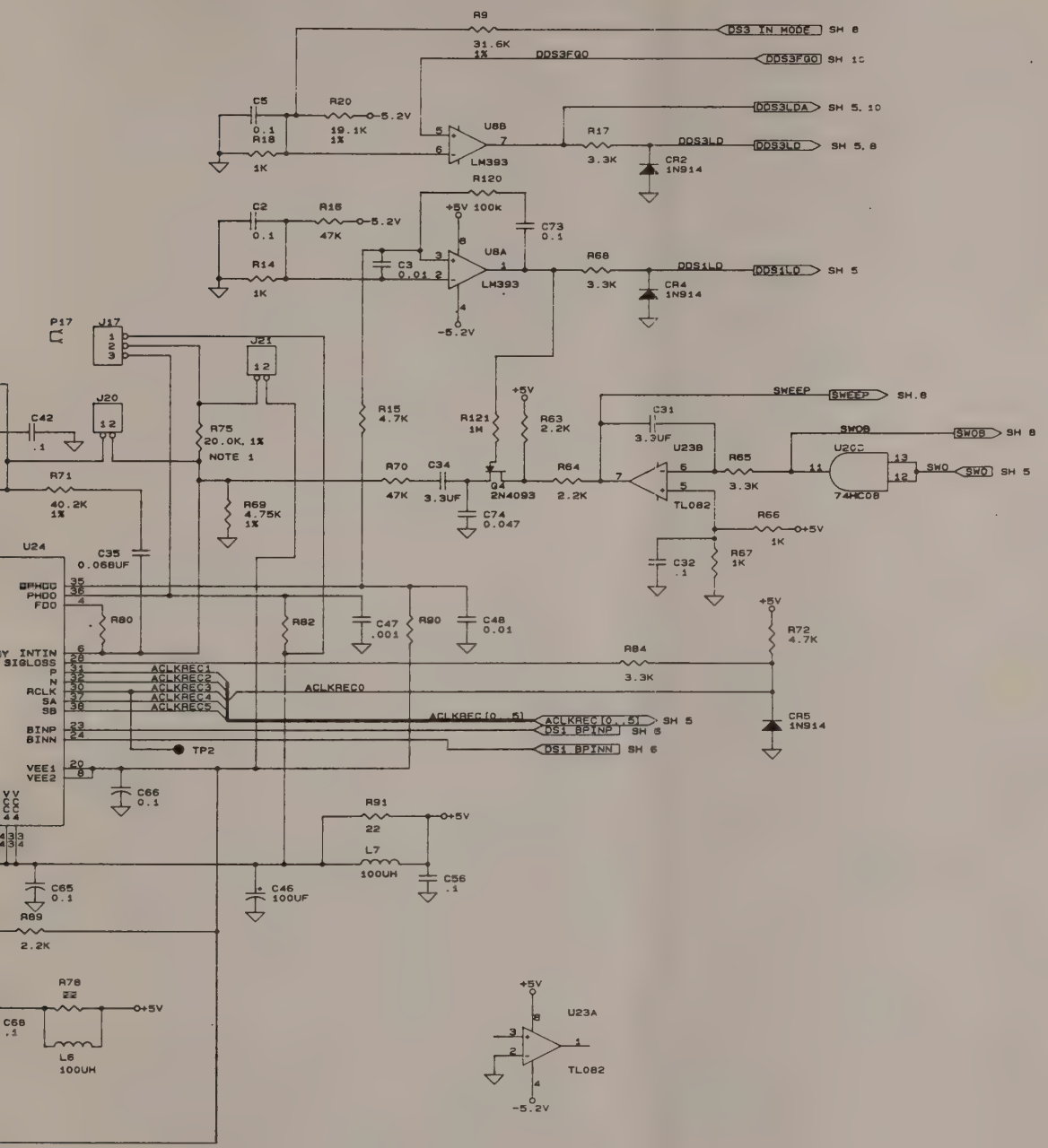

OCK RECOVERY

/*BINCRC=0xE8F0*/

SCIENTIFIC-ATLANTA, INC.		
INSTRUMENTATION DIVISION 4388 SHACKLEFORD RD NORCROSS, GA 30093		
Title DEMUX CARD: ANALOG CLOCK RECOVERY DS1		
Size C	Document Number 307221	REV G
Date: December 10, 1990	Sheet 7 of 11	

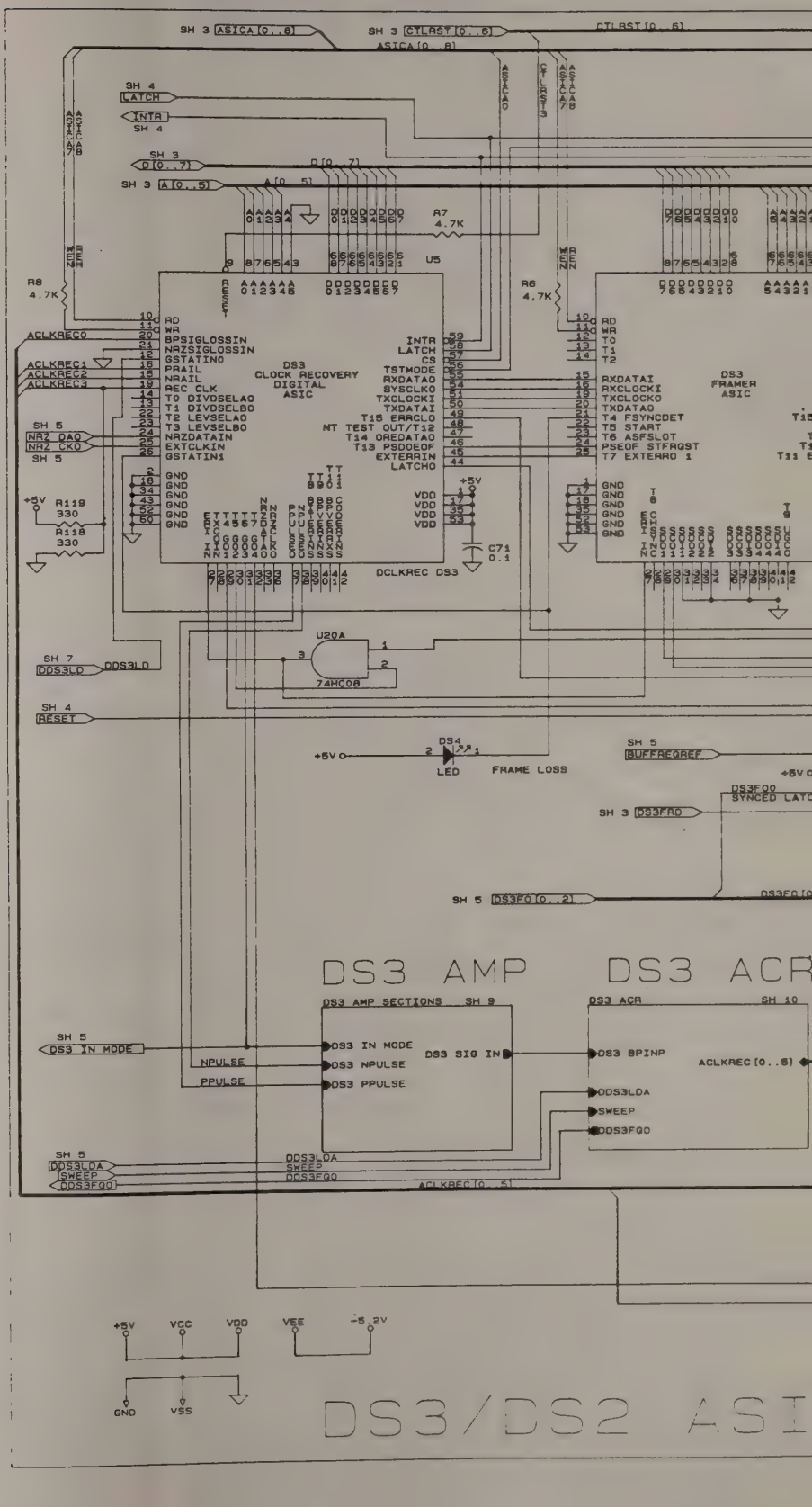
DS3 AMP
DS3 ACR
DS3/DS2 ASI
DS3 AMP SECTIONS SH 9
DS3 ACR SH 10
DS3 CLOCK RECOVERY DIGITAL ASIC
DS3 FRAMER ASIC
DCLKREC DS3
74HC08
LED
FRAME LOSS
DS3 IN MODE
DS3 NPULSE
DS3 PPULSE
DS3 SIG IN
DS3 BPINP
ACLKREC[0..5]
SWEEP
+5V
VCC
VDD
VEE
-5.2V
GND
VSS

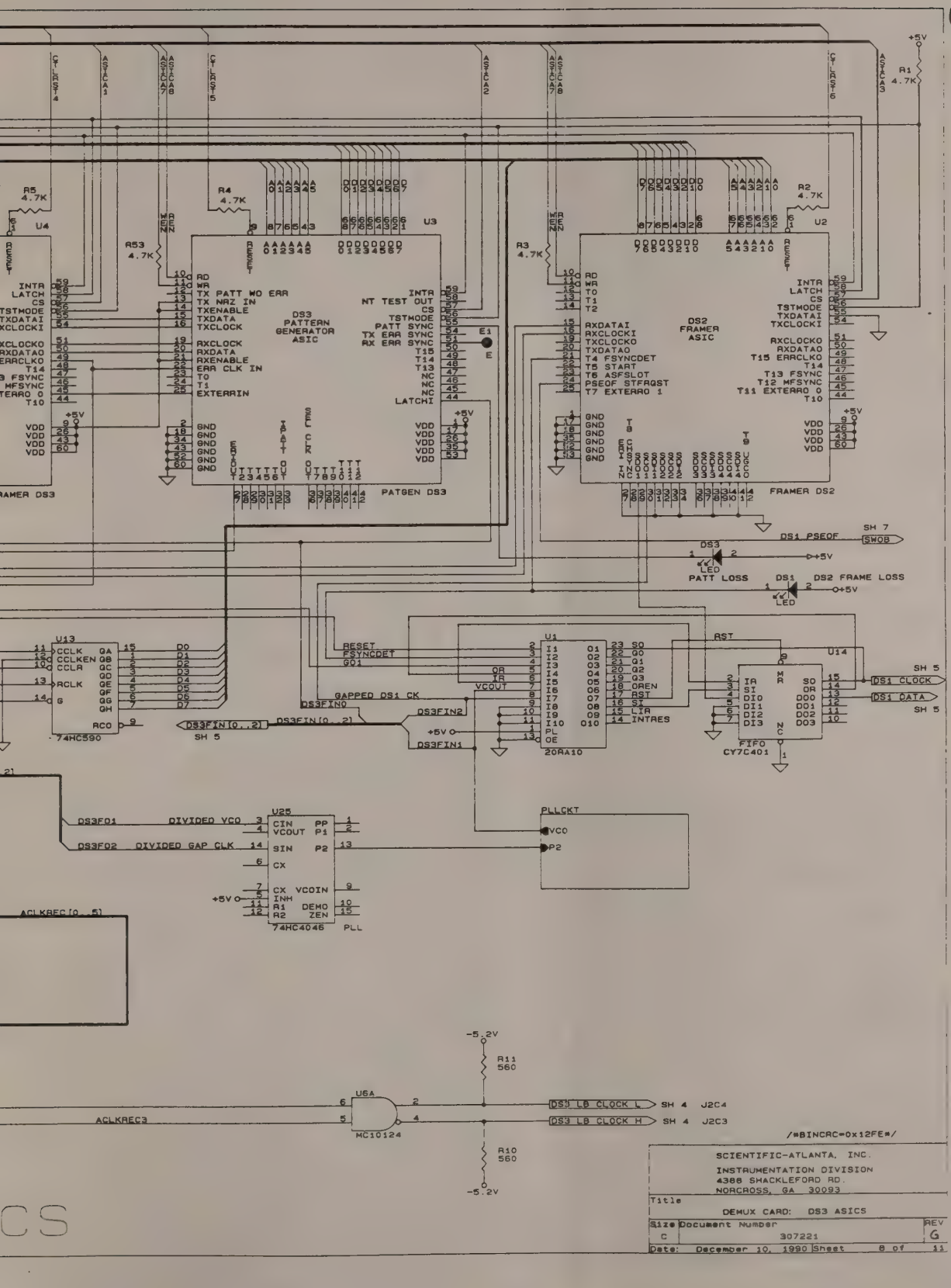
DS3 PATTERN GENERATOR ASIC
PATGEN DS3
DS2 FRAMER ASIC
FRAMER DS2
DS3 LED PATT LOSS
DS1 LED DS2 FRAME LOSS
DS1 PSEOF
DS1 CLOCK
DS1 DATA
74HC590
74HC4046 PLL
20RA10
CY7C401 FIFO
MC10124
DEMUX CARD: DS3 ASICS
SCIENTIFIC-ATLANTA, INC.
INSTRUMENTATION DIVISION
4386 SHACKLEFORD RD.
NORCROSS, GA 30093
Date: December 10, 1990 Sheet 8 of 11

DS3

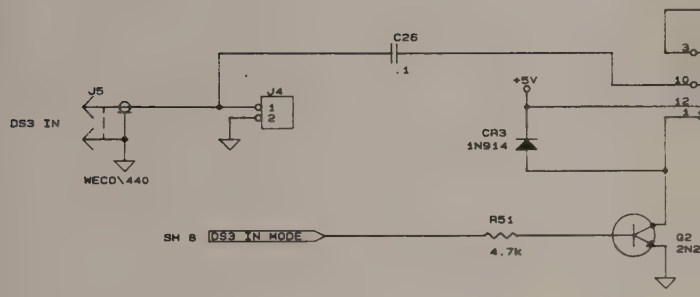

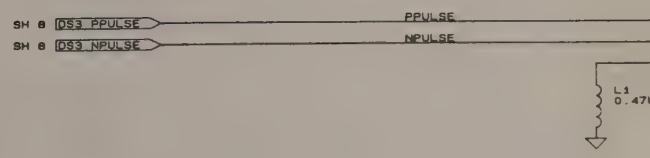

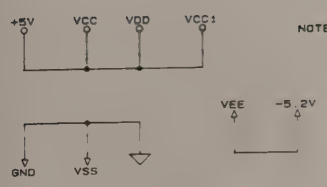

NOTE: THE FOLLOWING PARTS ARE NOT USED ON THIS B
J4, J16

IN/OUT AMP

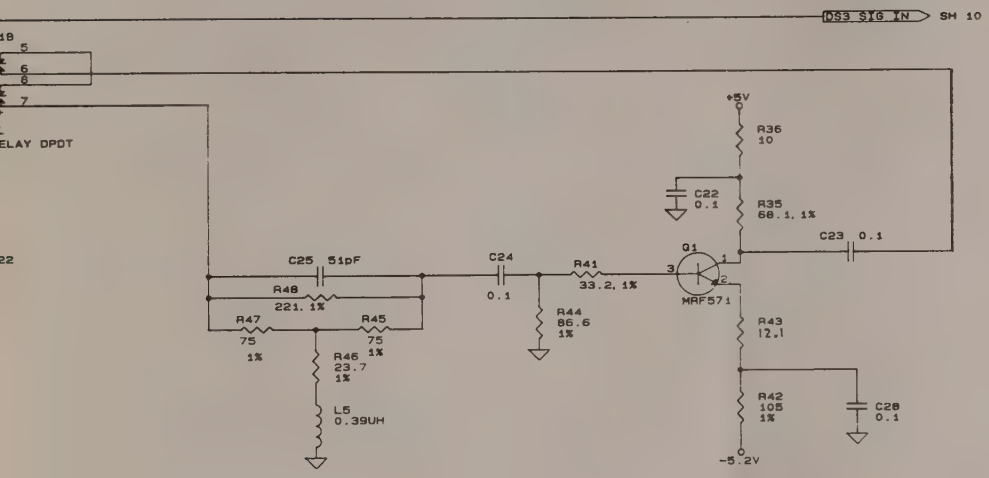

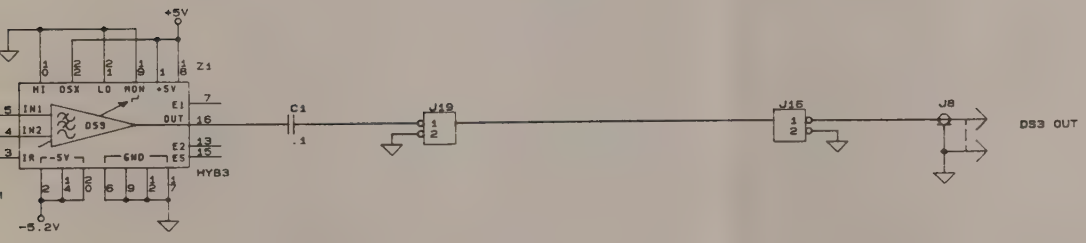

ARD

/*BINCRC=0x5727*/

SCIENTIFIC-ATLANTA, INC. INSTRUMENTATION DIVISION 4388 SHACKLEFORD RD. NORCROSS, GA 30093		
Title: DEMUX: DS3 IN/OUT SECTIONS		
Size: C	Document Number: 307221	REV: G
Date: December 10, 1990	Sheet 9 of 11	

DS3 ANALO

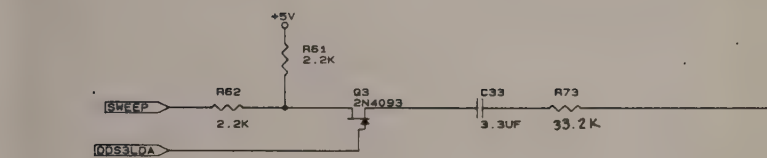

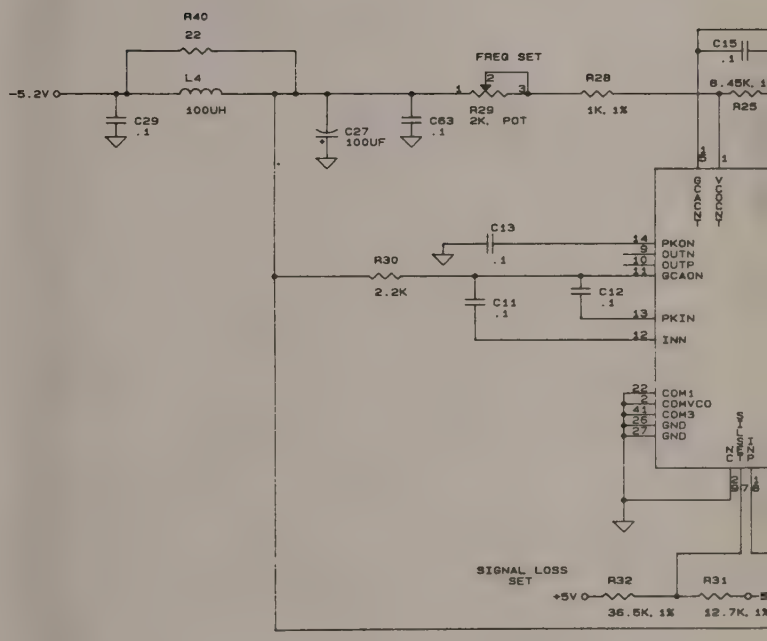

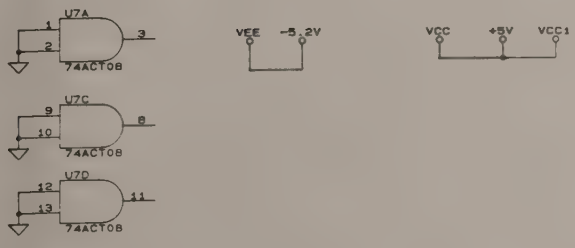

NOTE 1: R117 IS A SELECT AT TEST RESISTOR.
(TYP. RANGE 1.5K-3.3K)

OG CLOCK RECOVERY

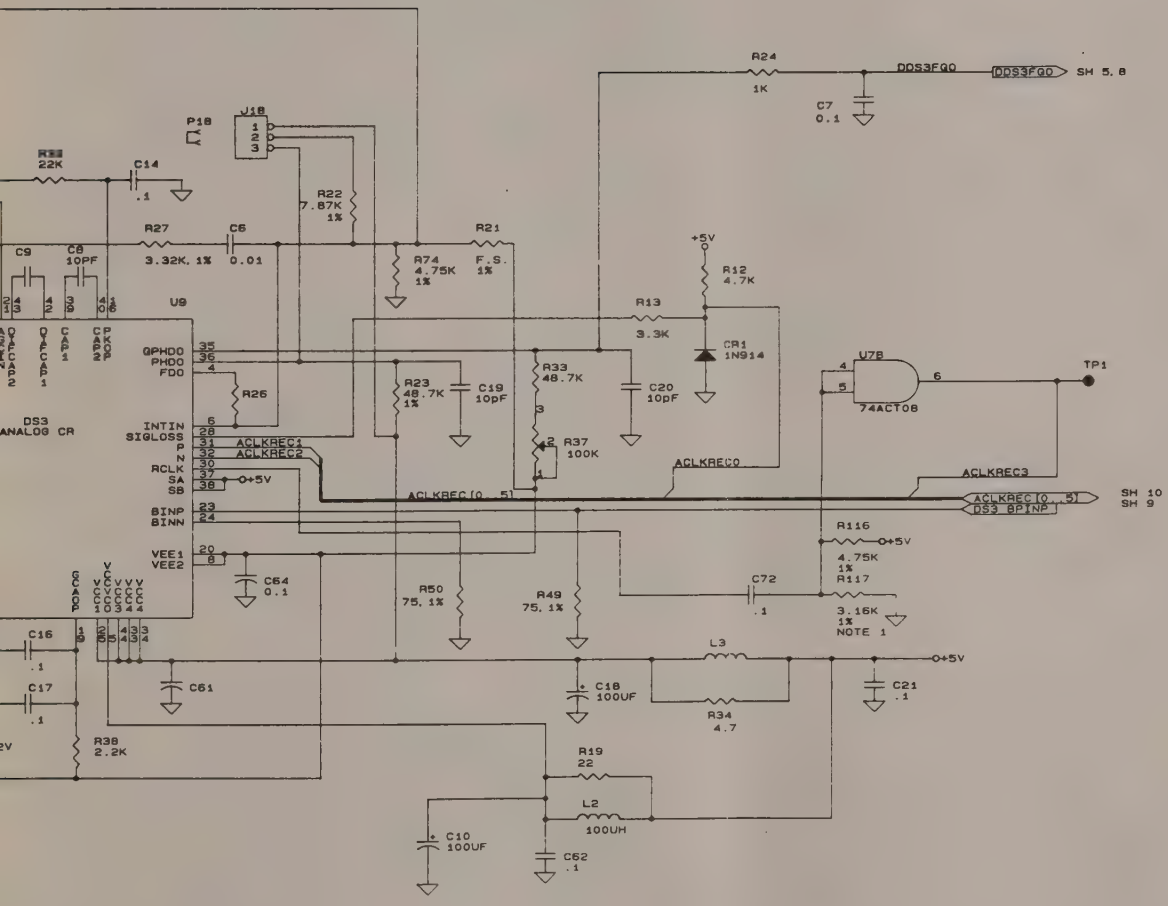

/*BINCRC=0x20FA*/

SCIENTIFIC-ATLANTA, INC INSTRUMENTATION DIVISION 4388 SHACKLEFORD RD NORCROSS, GA 30093	
Title DEMUX CARD: ANALOG CLOCK RECOVERY DS3	
Size Document Number C , 307221	REV G
Date: December 10, 1990 Sheet 10 of 11	

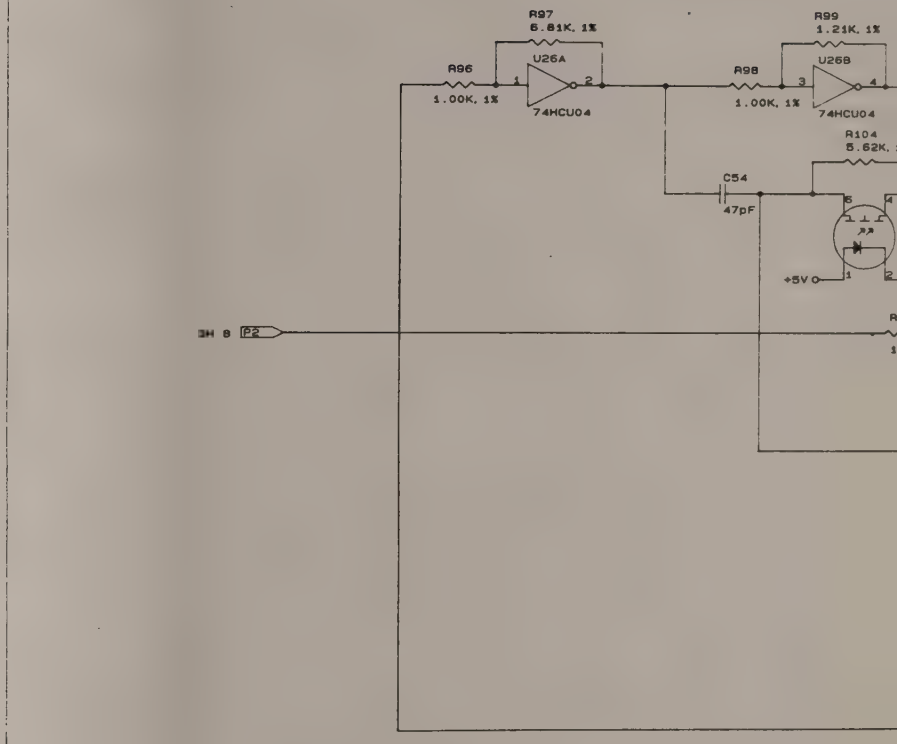
R97
6.81K, 1%
R99
1.21K, 1%
U26A
R96
1.00K, 1%
74HCU04
R98
1.00K, 1%
U26B
74HCU04
R104
C54
47pF
+5V
3H 8
P2

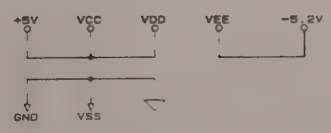
+5V
VCC
VDD
VEE
-5.2V
GND
VSS

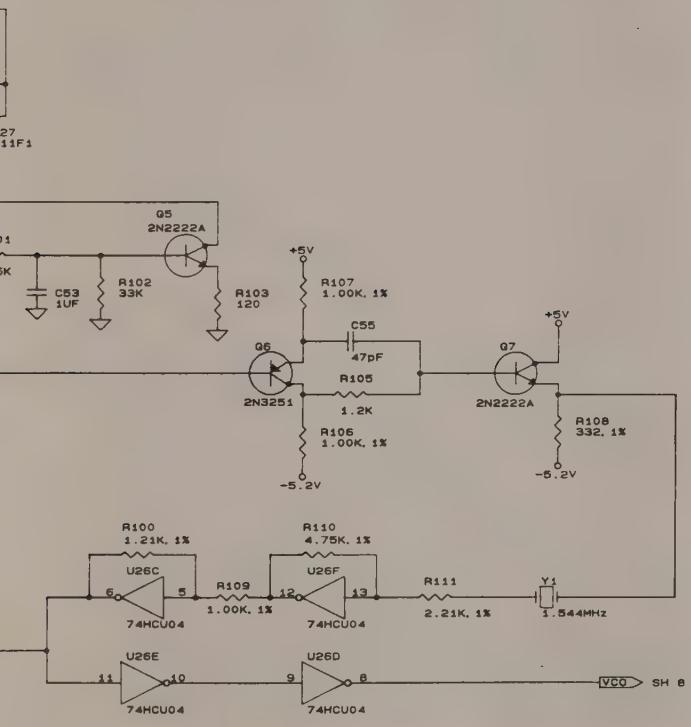

/*BINCRC=0x93F7*/

SCIENTIFIC-ATLANTA, INC.		
INSTRUMENTATION DIVISION		
4386 SHACKLEFORD RD		
NORCROSS, GA 30093		
Title		
DEMUX CARD: PLL CIRCUIT		
Size: C	Document Number: 307221	REV: G
Date: December 10, 1990	Sheet 11 of 11	

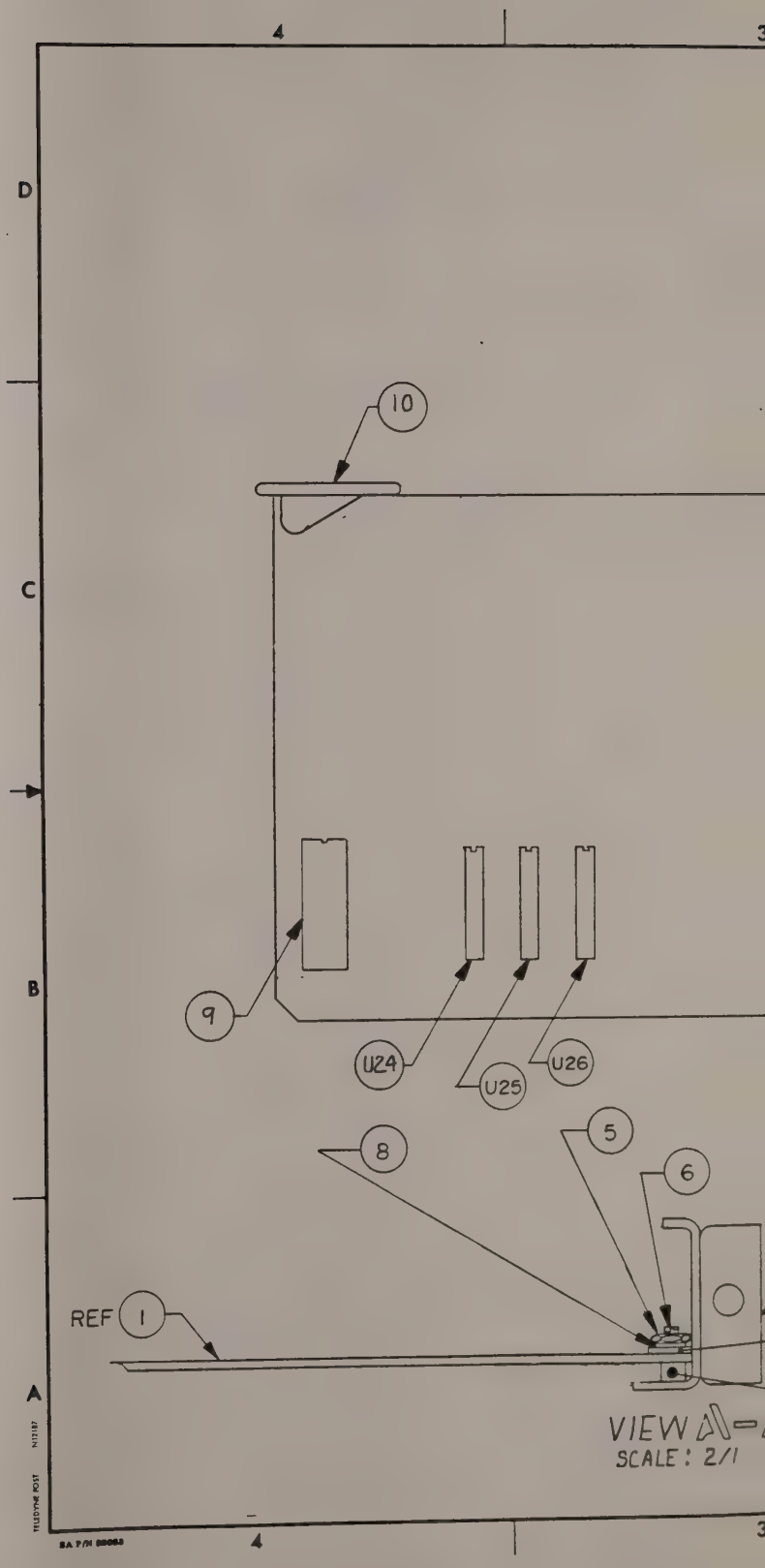
4
3
D
C
B
A
10
9
U24
U25
U26
8
5
6
REF
1
VIEW A-
SCALE: 2/1
4
3

APPLICATION		
QTY REQD	NEXT ASSY	USED ON
1	306200	AT9000

REVISIONS				
ZONE	REV	DESCRIPTION	DATE	APPROVED
	-	INITIAL RELEASE		
	A	ECO 10746	7/13/89	
	B	ECO 10871-10872	11-9-89	
	C	ECO 10944, 10909	2-22-90	
	D	INC ECR'S 12923, 12928 AND 12930	5-29-91	

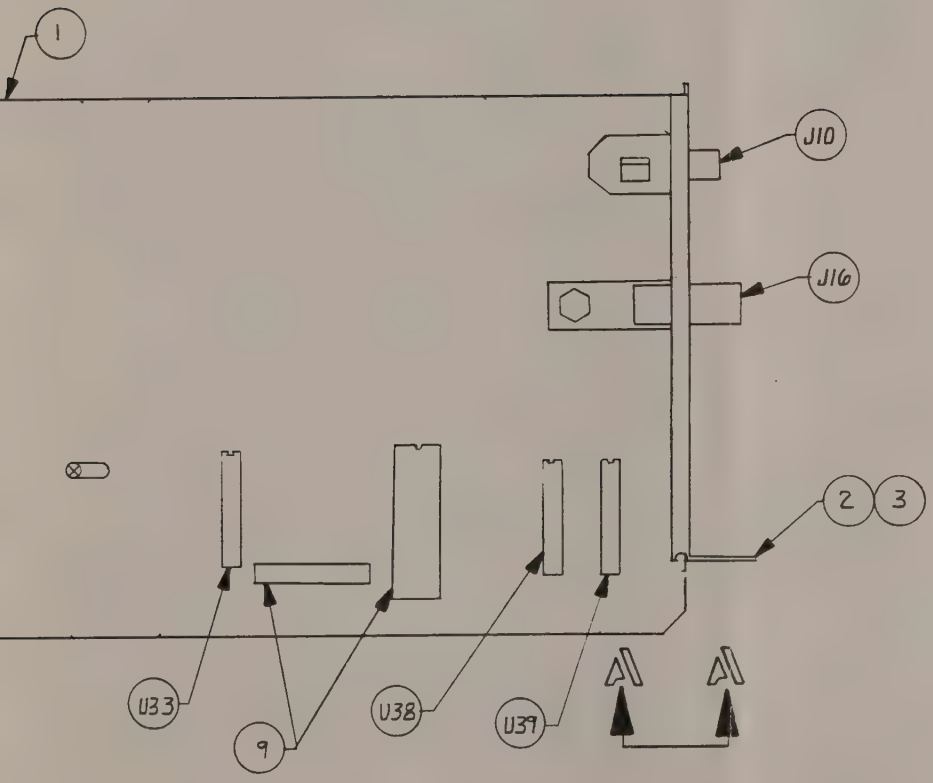

SEE SEPARATE PARTS LIST

2 REF
7
4

ITEM OR FIND NO.	QTY REQD	S-A STOCK NO	NOMENCLATURE OR DESCRIPTION	MATL SPEC AND SIZE OR COMPONENT VALUE	IDENTIFYING OR PART NO	FSCM NO.

PARTS LIST

UNLESS OTHERWISE SPECIFIED ALL CAPACITORS ARE IN MICROFARADS AND ALL RESISTORS ARE IN OHMS ±10% AND 1/4 WATT

LAST REFERENCE DESIGNATION USED

C	CR	J	K
Q	R	S	U

ALL DIMENSIONS ARE IN INCHES UNLESS OTHERWISE SPECIFIED

TOLERANCES
3 PLACE DECIMAL ± .005
2 PLACE DECIMAL ± .02
1 PLACE DECIMAL ± .1

FRACTIONS ± ANGLES ± 30

MAX SURFACE ROUGHNESS 125 ALL MACHINED SURFACES EXCEPT AS NOTED

BREAK SHARP EDGES AND CORNERS .010 MAX

FINISH NONE

CONTRACT NO.

DWN	Ted Smith	7-12-89
ENGR	Johnny Mac	7/12/89
CHK	David Cain	7-17-89
PROD		9-5-89
APVD		
APVD		

Scientific-Atlanta 3845 Pleasantdale Road Atlanta, Georgia 30340

ANALOG ASSEMBLY DAS

SIZE	FSCM NO	DWG NO	REV
C	10110	328079	D

SCALE 1/1 SHEET 1 OF 2

DWG NO 328079 REV D

EPROM AND PAL CHART

	ECO NO. 10746	ECO NO. 10871-872	EC
TOP ASSY - 328079	328079A	328079B	
SUB-ASSY - 327989	→	→	
PWB - 309233A	309260	→	
U24 - 309652 U24 3E43	→	→	
U25 - 309653 U25 58EB	→	→	
U26 - 309654 U26 51BC	→	→	
U33 - 309655 U33 BABI	→	→	
U38 - 309656 U38 B4E2	→	→	
U39 - 309657 U39 4EC7	→	→	
ITEM 9 { U22 - 309658 DOAA U22 / U36 - 309658 28FB U36 }	ITEM 9 { U22 - 309672 EC66 U22 / U36 - 309672 816W U36 }	ITEM 9 { U22 - 457019 F4C4 U22 / U36 - 457019 05DE U36 }	IT
VER 2.2	VER 2.3	VER. 3.0	

APPLICATION		
QTY REQD	NEXT ASSY	USED ON
1	306200	AT9000

REVISIONS				
ZONE	REV	DESCRIPTION	DATE	APPROVED
	-	SEE SHEET 1 FOR REV		R

O NO. 10907	ECO NO. 12928	ECO NO. 12930	ECO NO.
328079C	328079D	328079D	
→	→	→	
→	→	→	
→	→	→	
→	→	→	
→	→	→	
→	→	→	
→	→	→	
→	→	→	
EM U22-457032 F4D2 U22 / U36-457032 11FC U36	ITEM 9 U22-461076 74D2 U22 / U36-461076 0B2F U36	ITEM 9 U22-461093 F4D2 U22 / U36-461093 0B2D U36	
→	→	→	

ITEM OR FIND NO.	QTY REQD	S-A STOCK NO	NOMENCLATURE OR DESCRIPTION	MATL SPEC AND SIZE OR COMPONENT VALUE	IDENTIFYING OR PART NO	FSCM NO

PARTS LIST

UNLESS OTHERWISE SPECIFIED ALL CAPACITORS ARE IN MICROFARADS AND ALL RESISTORS ARE IN OHMS ±10% AND 1/4 WATT

LAST REFERENCE DESIGNATION USED

C CR J K
Q R S U

ALL DIMENSIONS ARE IN INCHES UNLESS OTHERWISE SPECIFIED

TOLERANCES
3 PLACE DECIMAL ± .005
2 PLACE DECIMAL ± .02
1 PLACE DECIMAL ± .1

FRACTIONS ± ANGLES ±0°30'

MAX SURFACE ROUGHNESS ALL MACHINED SURFACES EXCEPT AS NOTED

BREAK SHARP EDGES AND CORNERS .010 MAX

FINISH NONE

CONTRACT NO

DWN [signature] 7-12-89
ENGR
CHK
PROD
APVD
APVD

Scientific-Atlanta 3845 Pleasantdale Road Atlanta, Georgia 30340

ASSEMBLY PWB ANALOG DAS

SIZE C | FSCM NO 10110 | DWG NO 328079 | REV C

SCALE NONE | SHEET 2

DWG NO 328079 | SH 2 | REV D

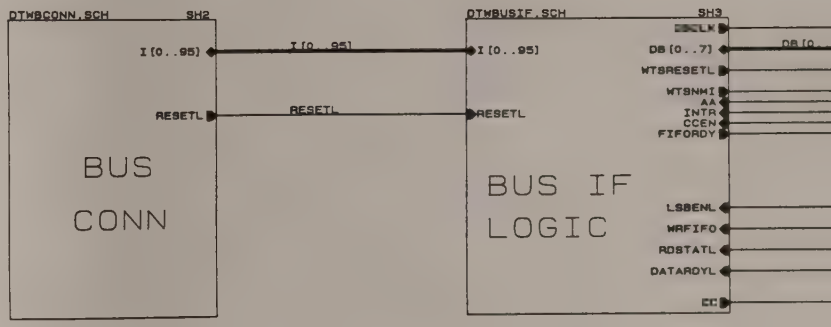
DTWBCONN.SCH
SH2
I[0..95]
RESETL
BUS
CONN
I[0..95]
RESETL
DTWBUSIF.SCH
SH3
I[0..95]
RESETL
DB[0..7]
WTSRESETL
WTSNMI
AA
INTR
CCEN
FIFORDY
BUS IF
LOGIC
LSBENL
WRFIFO
RDSTATL
DATARDYL

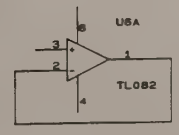
U6A
TL082

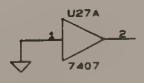
U27A
7407

APPLICATION			REVISIONS			
QTY REQD	NEXT ASSY	USED ON	SYM	DESCRIPTION	DATE	APPROVED
	327998	AT9500	A	SEE ECO 10746 , 10721		
	328079	AT9000	B	ECO 10823 SEE ECO 10849,10871-872	11/9/89	

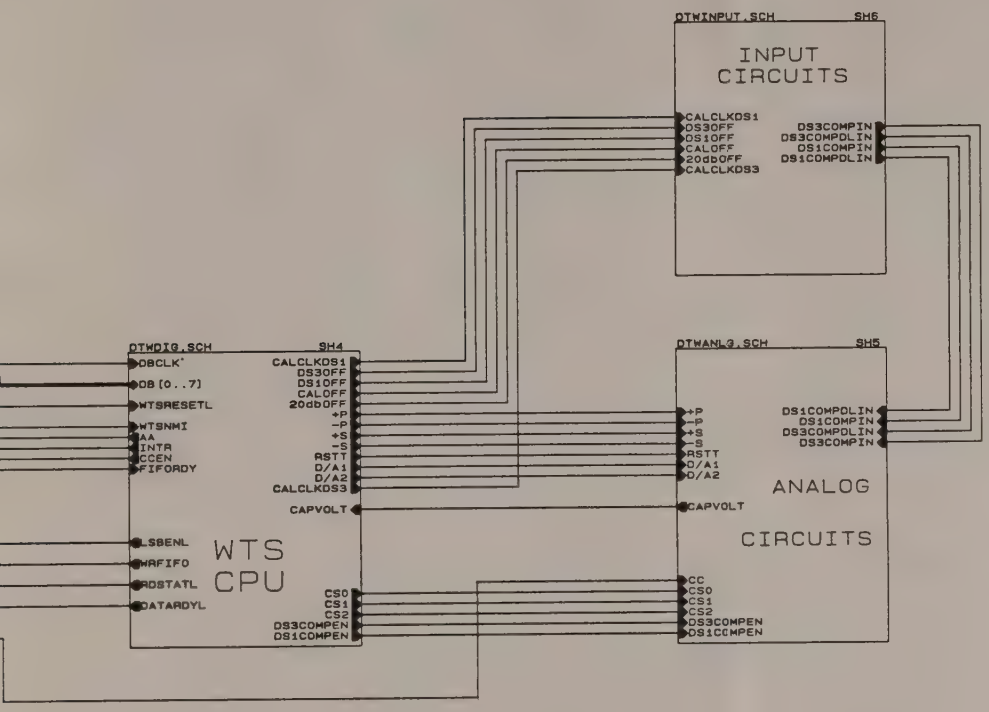

/*BINCRC=0xDC93*/

DWN	R.ROBERTS	14-JUN-89
ENGR	ROBERT C. HYERS	6-6-89
CHK	L. GILLELAND	6-19-89
PROD	JAMES HOLLAND	
APVD	B. SPRINKLE	
APVD		

SCIENTIFIC-ATLANTA, INC.
INSTRUMENTATION DIVISION
4386 SHACKLEFORD RD.
NORCROSS, GA. 30093

Title: DTA ANALOG PWB: TOP LEVEL

Size	Document Number	REV
C	327987	B

Date: October 24, 1989 Sheet 1 of 6

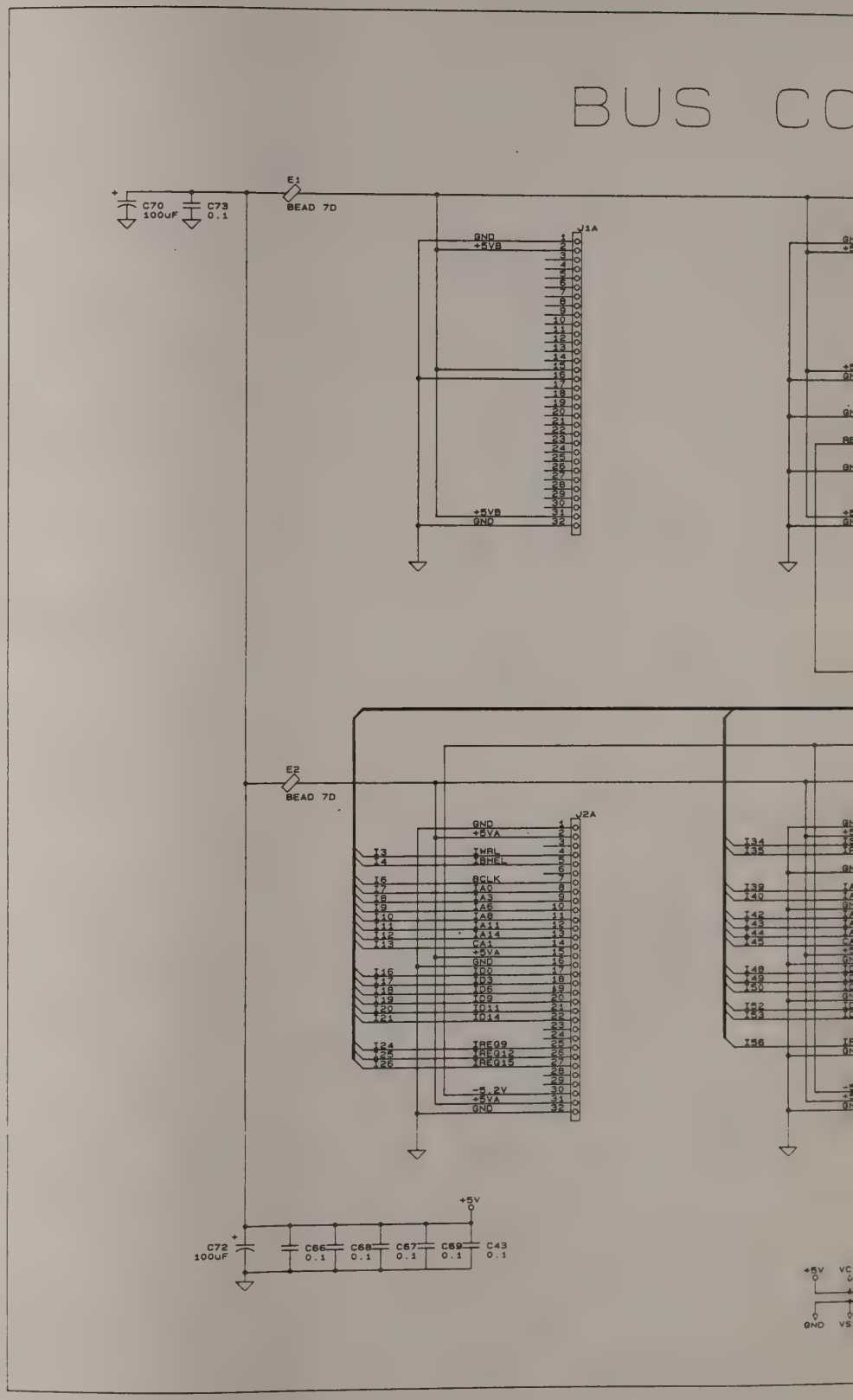
BUS CO
E1
BEAD 7D
C70
100uF
C73
0.1
J1A
GND
+5VB
+5VB
GND
E2
BEAD 7D
J2A
GND
+5VA
IWRL
IBHEL
BCLK
IA0
IA3
IA5
IA8
IA11
IA14
CA1
+5VA
GND
ID0
ID3
ID6
ID9
ID11
ID14
IREQ9
IREQ12
IREQ15
-5.2V
+5VA
GND
+5V
C72
100uF
C66
0.1
C68
0.1
C67
0.1
C69
0.1
C43
0.1
+5V
GND

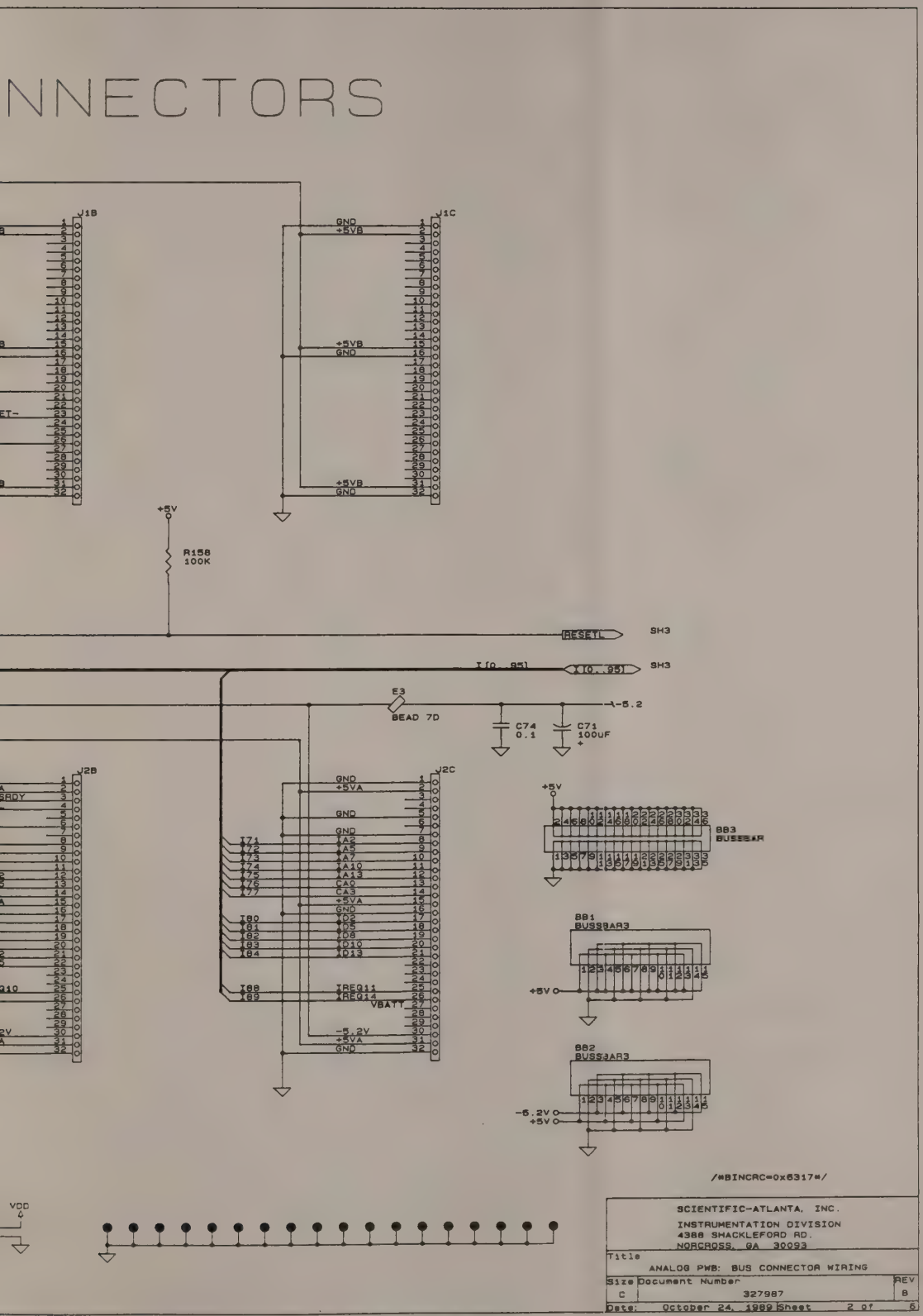
NNECTORS
J1B
J1C
GND
+5VB
+5VB
GND
+5VB
GND
+5V
R158
100K
RESETL
SH3
I[0..85]
I[0..85]
SH3
E3
BEAD 7D
-5.2
C74
0.1
C71
100UF
J2B
J2C
GND
+5VA
GND
GND
I71
I72
I73
I74
I75
I76
I77
IA2
IA5
IA7
IA10
IA13
CA0
CA3
+5VA
I80
I81
I82
I83
I84
I88
I89
ID2
ID5
ID6
ID10
ID13
IREQ11
IREQ14
VBATT
-5.2V
+5VA
GND
+5V
BB3
BUSSEAR
BB1
BUSSBAR3
+5V
BB2
BUSSBAR3
-5.2V
+5V
/*BINCRC=0x6317*/
VDD
SCIENTIFIC-ATLANTA, INC.
INSTRUMENTATION DIVISION
4386 SHACKLEFORD RD.
NORCROSS, GA 30093
Title
ANALOG PWB: BUS CONNECTOR WIRING
Size
C
Document Number
327987
REV
B
Date: October 24, 1989
Sheet 2 of 6

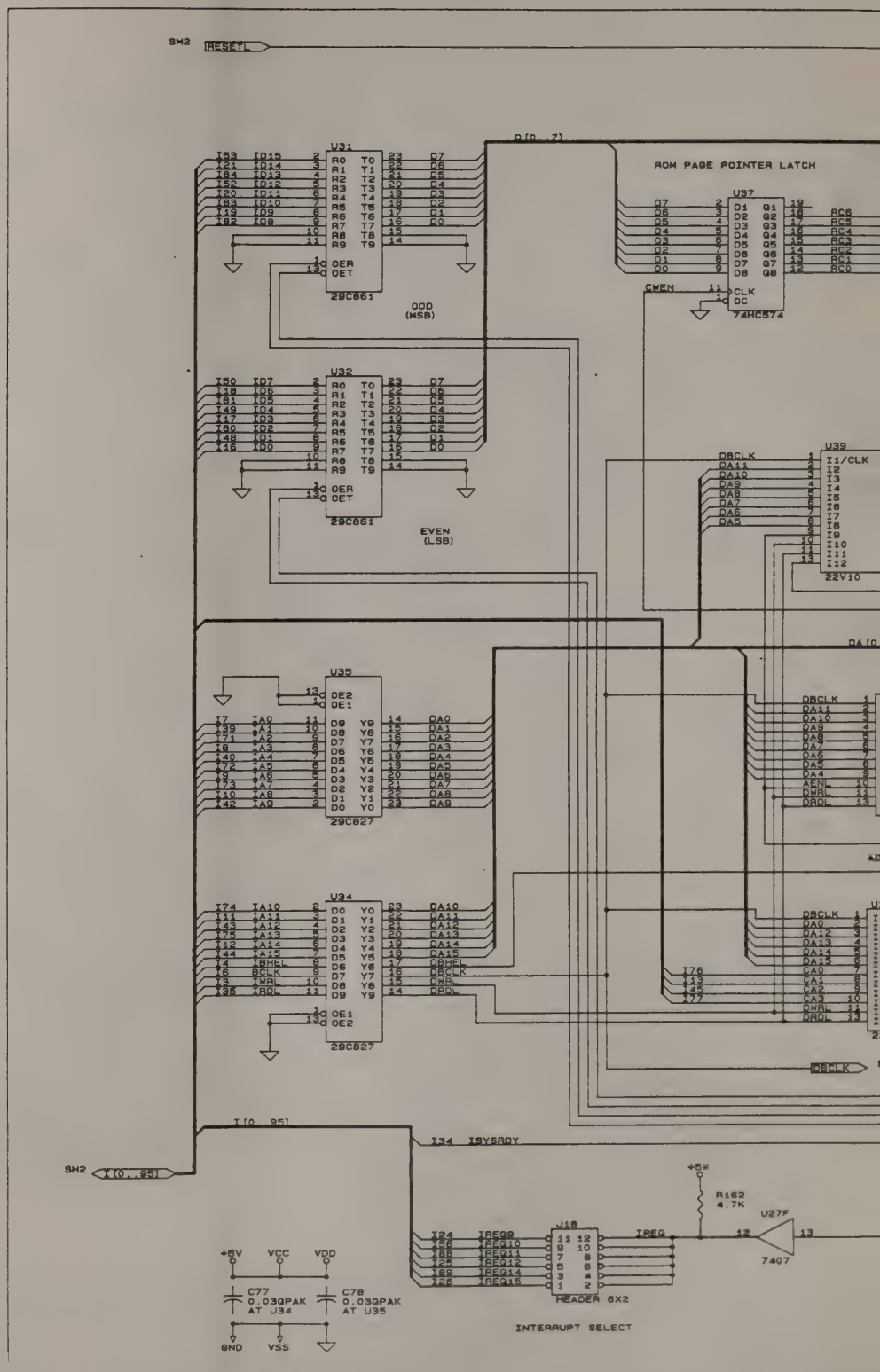

ANALOG PWB BUS

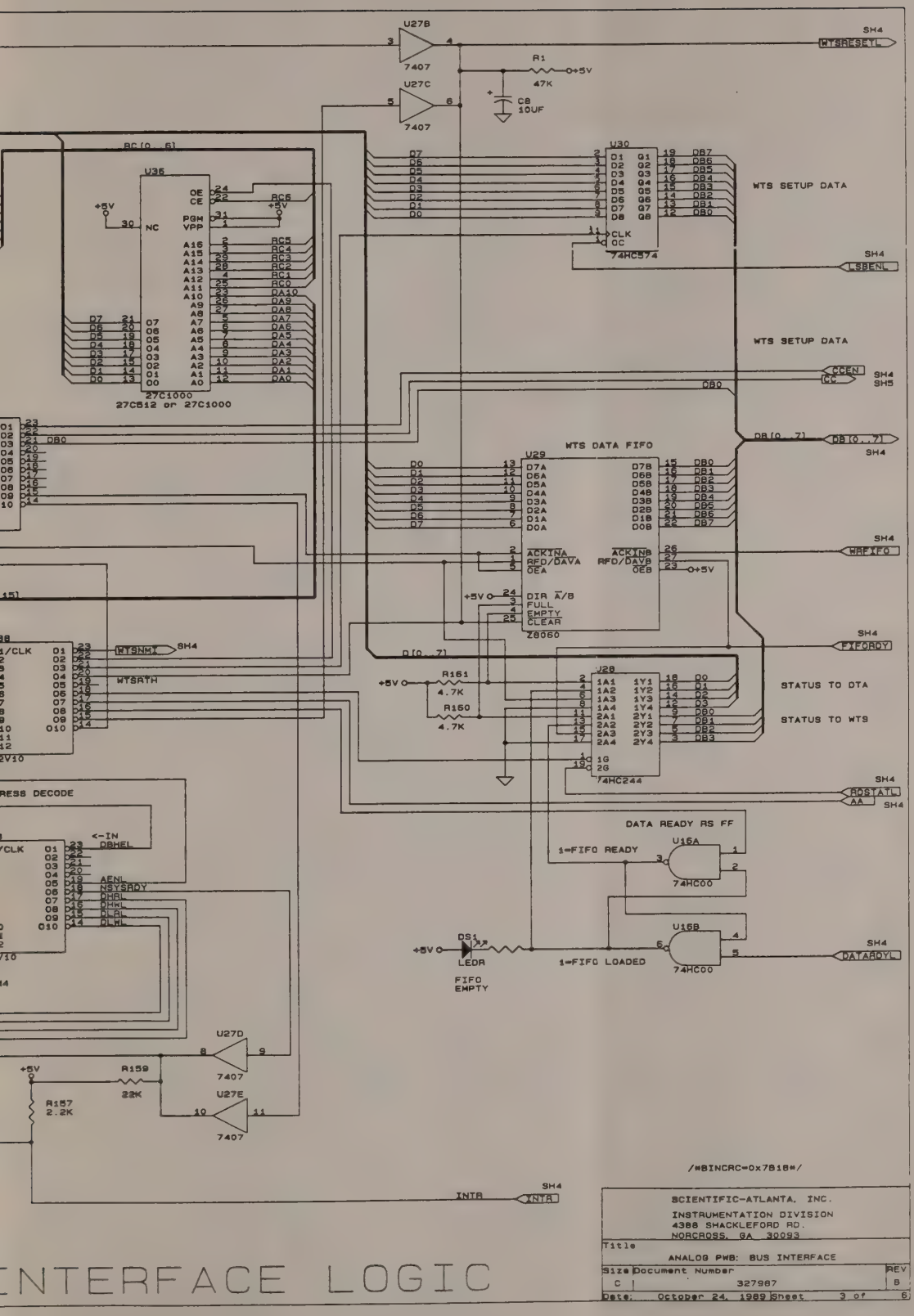
U27B
7407
WTSRESETL
R1
47K
+5V
U27C
C8
10UF
U36
27C1000
27C512 or 27C1000
U30
74HC574
WTS SETUP DATA
LSBENL
CCEN
CC
DB0
DB[0..7]
WTS DATA FIFO
U29
Z8060
ACKINA
RFD/DAVA
OEA
ACKINB
RFD/DAVB
OEB
DIR A/B
FULL
EMPTY
CLEAR
WRFIFO
FXFORDY
WTSNMX
WTSATH
R161
4.7K
R160
4.7K
U28
74HC244
STATUS TO DTA
STATUS TO WTS
HDSTATL
AA
DATA READY RS FF
1=FIFO READY
U16A
74HC00
U16B
DS1
LEDR
FIFO EMPTY
1=FIFO LOADED
DATARDYL
U27D
U27E
R159
22K
R157
2.2K
/*BINCRC=0x7B18*/
INTA
INTA
SCIENTIFIC-ATLANTA, INC.
INSTRUMENTATION DIVISION
4386 SHACKLEFORD RD.
NORCROSS, GA 30093
Title
ANALOG PWB: BUS INTERFACE
Size
Document Number
327987
REV
B
Date: October 24, 1989
Sheet 3 of 6
INTERFACE LOGIC

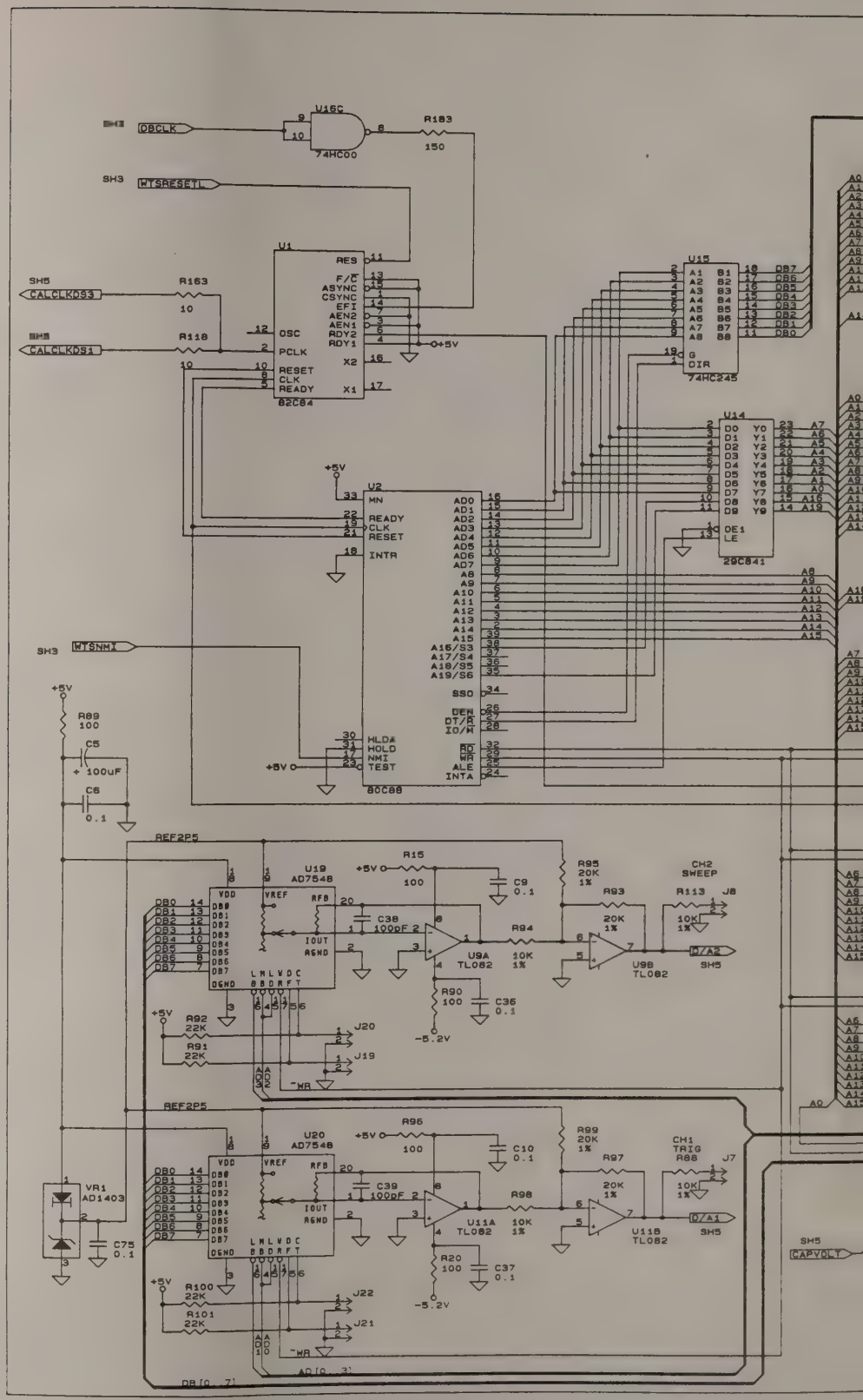

U16C
74HC00
R183
150
DBCLK
WTSRESETL
U1
82C84
RES
F/C
ASYNC
CSYNC
EFI
AEN2
AEN1
RDY2
RDY1
OSC
PCLK
RESET
CLK
READY
X2
X1
+5V
CALCLKDS3
CALCLKDS1
R163
10
R118
U15
74HC245
DIR
U14
29C841
OE1
LE
U2
80C88
MN
READY
CLK
RESET
INTR
HLDA
HOLD
NMI
TEST
SSO
DEN
DT/R
IO/M
RD
WR
ALE
INTA
WTSNMI
R89
100
C5
100uF
C6
0.1
REF2P5
U19
AD7548
VDD
VREF
RFB
IOUT
AGND
DGND
R15
100
C9
0.1
C38
100pF
U9A
TL082
R94
10K
1%
R95
20K
1%
R93
20K
1%
U9B
TL082
CH2
SWEEP
R113
10K
1%
J8
D/A2
SH5
R90
100
C36
0.1
-5.2V
R92
22K
R91
22K
J20
J19
~WR
U20
AD7548
R96
100
C10
0.1
C39
100pF
U11A
TL082
R98
10K
1%
R99
20K
1%
R97
20K
1%
U11B
TL082
CH1
TRIG
R88
10K
1%
J7
D/A1
R20
100
C37
0.1
R100
22K
R101
22K
J22
J21
VR1
AD1403
C75
0.1
CAPVOLT

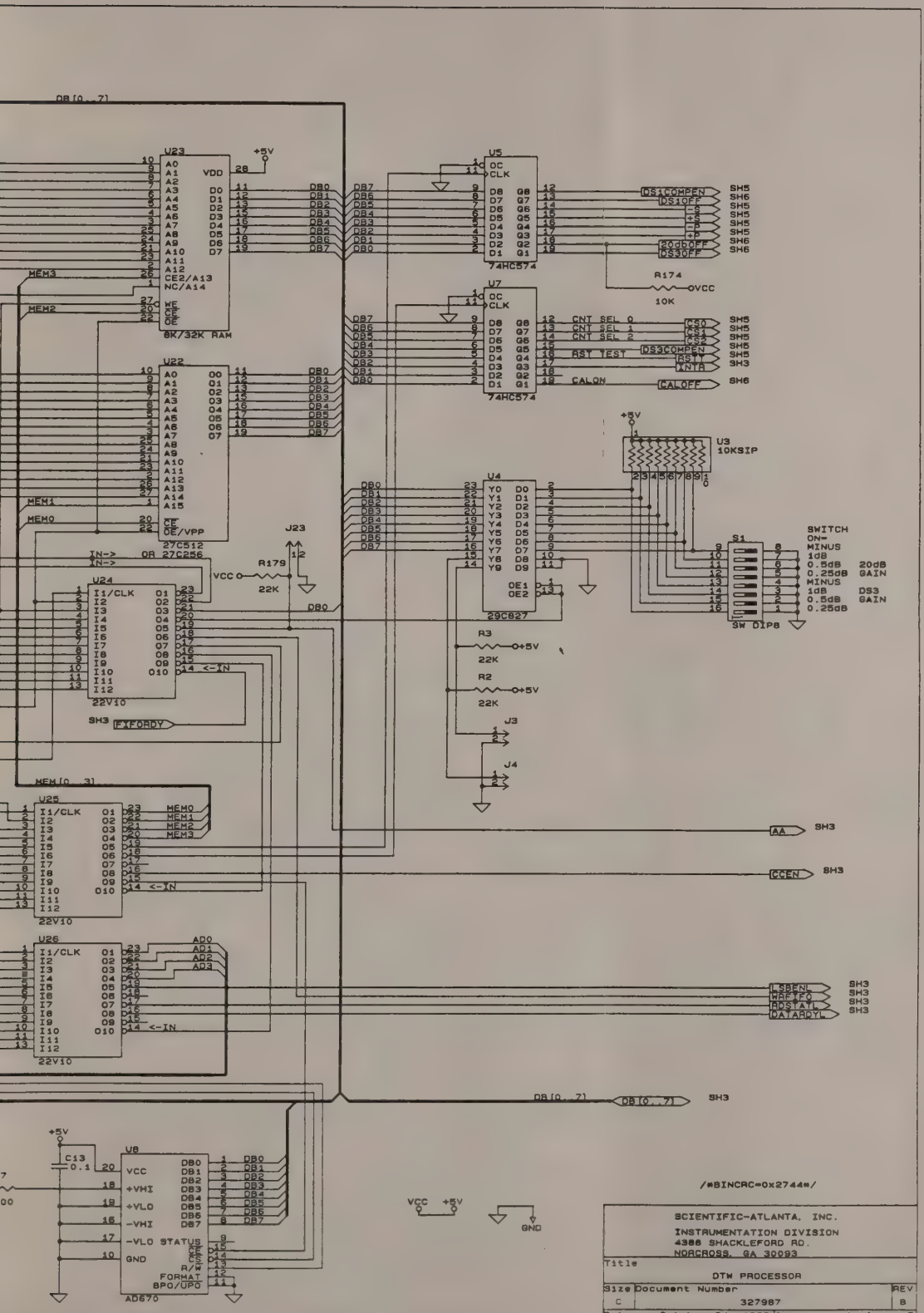
DB[0..7]
U23
8K/32K RAM
U22
27C512
OR 27C256
U24
22V10
U25
22V10
U26
22V10
U5
74HC574
U7
74HC574
U4
29C827
U3
10KSIP
S1
SW DIP8
SWITCH
ON=
MINUS
1dB
0.5dB
0.25dB
20dB
GAIN
MINUS
1dB
0.5dB
0.25dB
DS3
GAIN
R174
10K
R179
22K
R3
22K
R2
22K
J23
J3
J4
FIFORDY
MEM[0..3]
AA
CCEN
LSBENL
WRFIFO
ROSTATL
DATARDYL
DB[0..7]
U8
AD670
C13
0.1
/*BINCRC=0x2744*/
SCIENTIFIC-ATLANTA, INC.
INSTRUMENTATION DIVISION
4386 SHACKLEFORD RD.
NORCROSS, GA 30093
Title
DTW PROCESSOR
Size
C
Document Number
327987
REV
B
Date: October 24, 1989
Sheet 4 of 6

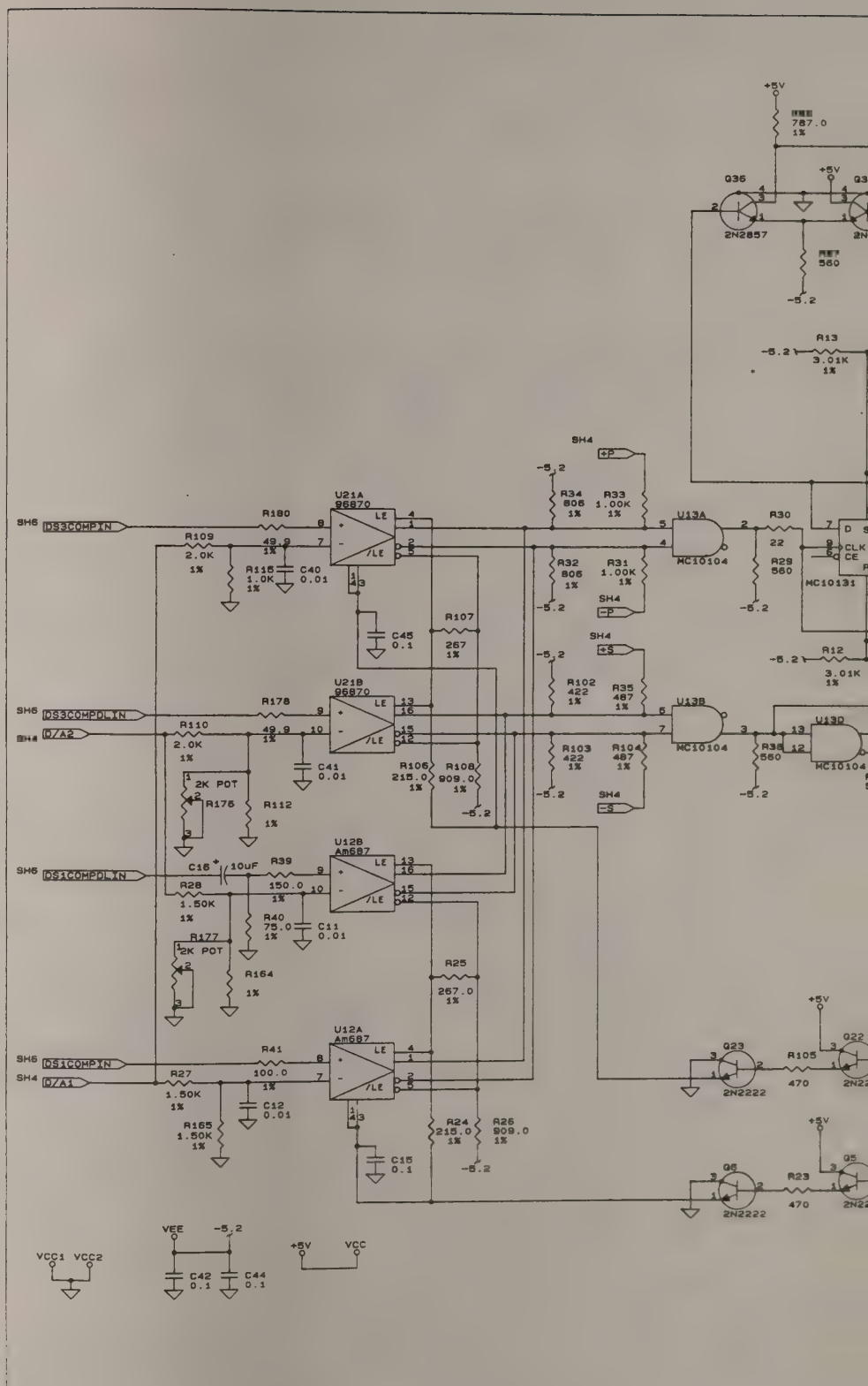

+5V
787.0
1%
Q36
2N2857
560
-5.2
R13
3.01K
1%
SH4
+P
-P
+S
-S
R34
806
1%
R33
1.00K
1%
R32
806
1%
R31
1.00K
1%
U13A
MC10104
R30
22
R29
560
MC10131
R12
3.01K
1%
U13B
MC10104
R38
560
U13D
MC10104
R102
422
1%
R35
487
1%
R103
422
1%
R104
487
1%
SH6
DS3COMPIN
R180
49.9
1%
R109
2.0K
1%
R115
1.0K
1%
C40
0.01
U21A
96870
LE
/LE
C45
0.1
R107
267
1%
SH6
DS3COMPDLIN
SH4
D/A2
R178
49.9
1%
R110
2.0K
1%
C41
0.01
2K POT
R176
R112
1%
U21B
96870
R106
215.0
1%
R108
909.0
1%
SH6
DS1COMPDLIN
C16
10uF
R39
150.0
1%
R28
1.50K
1%
R40
75.0
1%
C11
0.01
R177
2K POT
R164
1%
U12B
Am687
R25
267.0
1%
SH6
DS1COMPIN
SH4
D/A1
R41
100.0
1%
R27
1.50K
1%
C12
0.01
R165
1.50K
1%
U12A
Am687
C15
0.1
R24
215.0
1%
R26
909.0
1%
Q23
2N2222
R105
470
Q22
Q6
2N2222
R23
470
Q5
VCC1
VCC2
VEE
-5.2
C42
0.1
C44
0.1
+5V
VCC

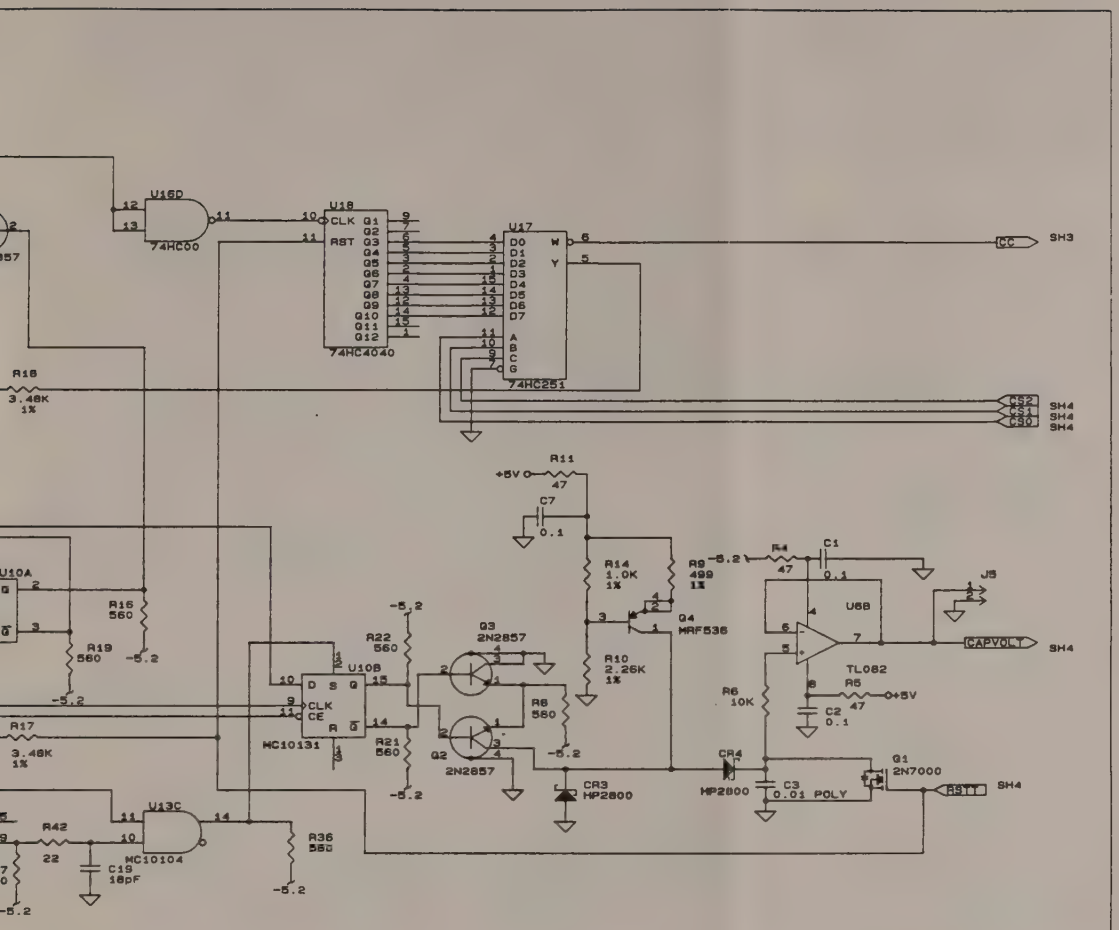

/*BINCRC=0x6893*/

SCIENTIFIC-ATLANTA, INC INSTRUMENTATION DIVISION 4386 SHACKLEFORD RD. NORCROSS, GA 30093		
Title MEASUREMENT CIRCUITS WTS		
Size C	Document Number 327987	REV B
Date: October 24, 1989	Sheet 5 of 6	

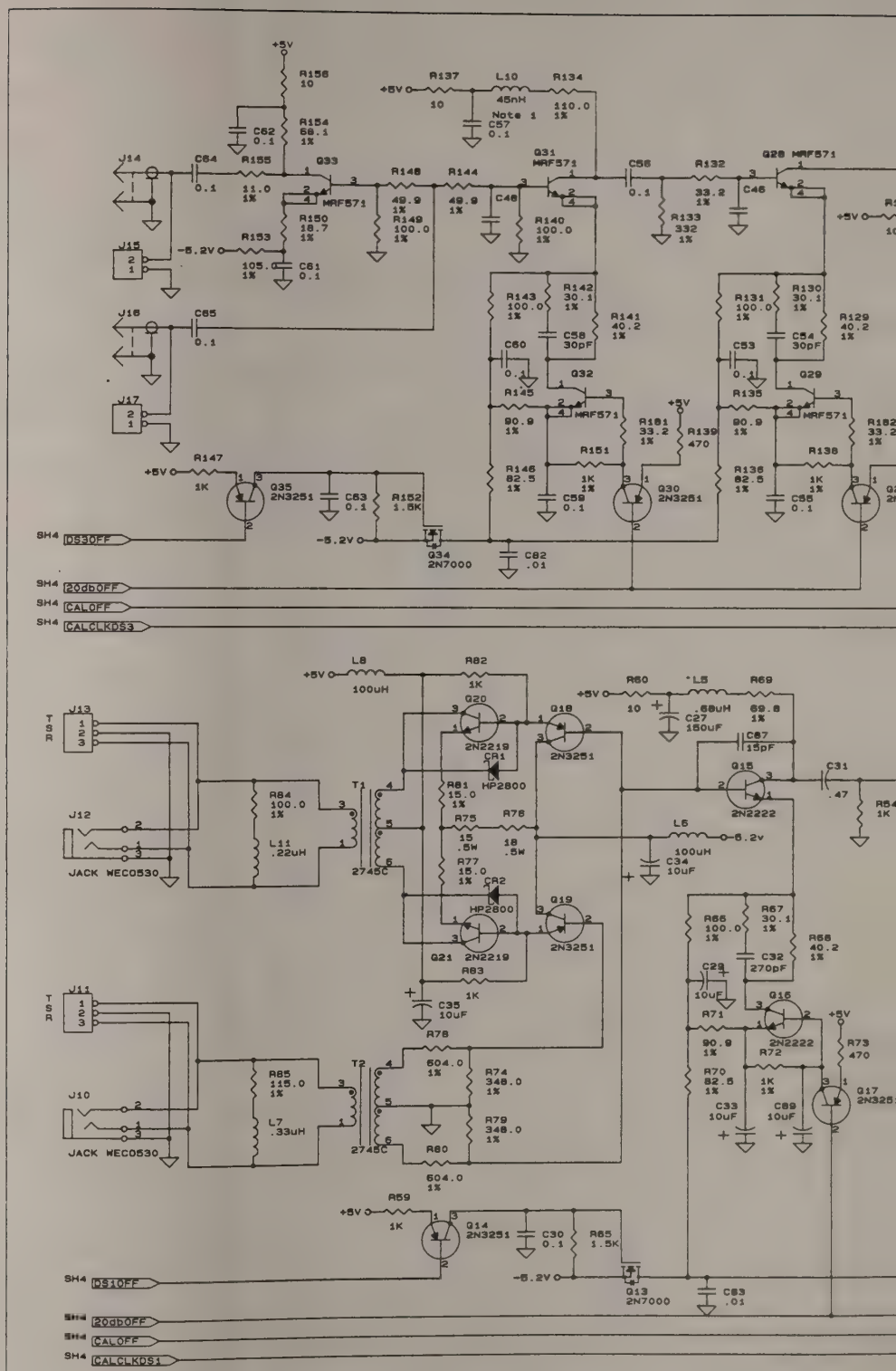
+5V
R156 10
C62 0.1
R154 68.1 1%
J14
C64 0.1
R155 11.0 1%
Q33 MRF571
R150 18.7 1%
R153 105.0 1%
C61 0.1
-5.2V
J15
J16
C65 0.1
J17
R147 1K
Q35 2N3251
C63 0.1
R152 1.5K
Q34 2N7000
C82 .01
SH4 DS30FF
SH4 20dbOFF
SH4 CALOFF
SH4 CALCLKDS3
R137 10
L10 45nH
Note 1
C57 0.1
R134 110.0 1%
R148 49.9 1%
R144 49.9 1%
C48
R149 100.0 1%
Q31 MRF571
R140 100.0 1%
C56 0.1
R132 33.2 1%
R133 332 1%
Q28 MRF571
C46
R143 100.0 1%
R142 30.1 1%
R141 40.2 1%
C58 30pF
C60 0.1
Q32
R145 90.9 1%
R146 82.5 1%
R151 1K 1%
C59 0.1
Q30 2N3251
R131 100.0 1%
R130 30.1 1%
R129 40.2 1%
C54 30pF
C53 0.1
Q29
R135 90.9 1%
R136 82.5 1%
R138 1K 1%
C55 0.1
R181 33.2 1%
R139 470
L8 100uH
R82 1K
Q20 2N2219
CR1 HP2800
Q18 2N3251
R60 10
L9 .68uH
R69 69.8 1%
C27 150uF
C67 15pF
Q15 2N2222
C31 .47
R54 1K
J13
J12
JACK WECO530
R84 100.0 1%
L11 .22uH
T1 2745C
R81 15.0 1%
R75 15 .5W
R78 18 .5W
R77 15.0 1%
L6 100uH
C34 10uF
-5.2v
CR2 HP2800
Q19 2N3251
Q21 2N2219
R83 1K
C35 10uF
R66 100.0 1%
R67 30.1 1%
R68 40.2 1%
C32 270pF
C29 10uF
Q16 2N2222
R71 90.9 1%
R72
R70 82.5 1%
R73 470
C33 10uF
C89 10uF
Q17 2N325
J11
J10
JACK WECO530
R85 115.0 1%
L7 .33uH
T2 2745C
R74 348.0 1%
R79 348.0 1%
R80 604.0 1%
R78 604.0 1%
R59 1K
Q14 2N3251
C30 0.1
R65 1.5K
Q13 2N7000
C83 .01
SH4 DS10FF
SH4 20dbOFF
SH4 CALOFF
SH4 CALCLKDS1
Notes:
1. L9 , L10 & L12 are etched on the printed board.

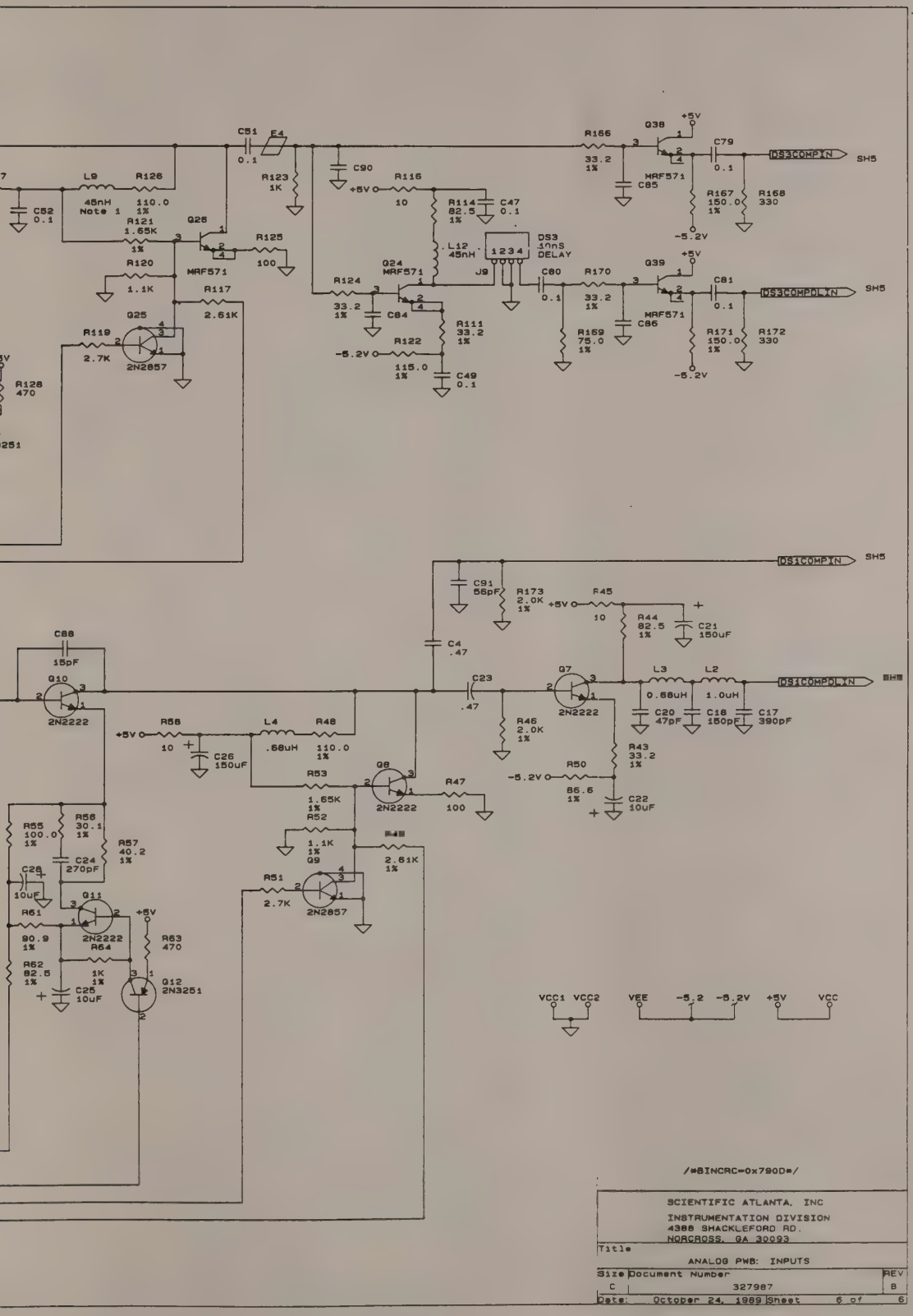
DS3COMPIN
SH5
DS3COMPDLYIN
DS1COMPIN
DS1COMPDLYIN
VCC1 VCC2 VEE -5.2 -5.2V +5V VCC
/*$INCRC=0x790D*/
SCIENTIFIC ATLANTA, INC
INSTRUMENTATION DIVISION
4386 SHACKLEFORD RD.
NORCROSS, GA 30093
Title
ANALOG PWB: INPUTS
Size Document Number REV
C 327987 B
Date: October 24, 1989 Sheet 6 of 6

	ECO NO. 10871-872	ECO NO. 11003	ECO NO.
TOP ASSY: 309124	309124C	309124D	309
SUB-ASSY: 309237	→	→	
PWB: 309236	→	→	
U18- 309148 U18 D55C	→	→	U18- U
U25- 309149 U25 8FFA	→	→	
U27- 309625 U27 986D	→	U27- 458355 U27 9AE5	
ITEM2 U19- 309626 U19 D9FF	ITEM 2 {U19- 457016 D4FF U19	→	ITEM 2 { U

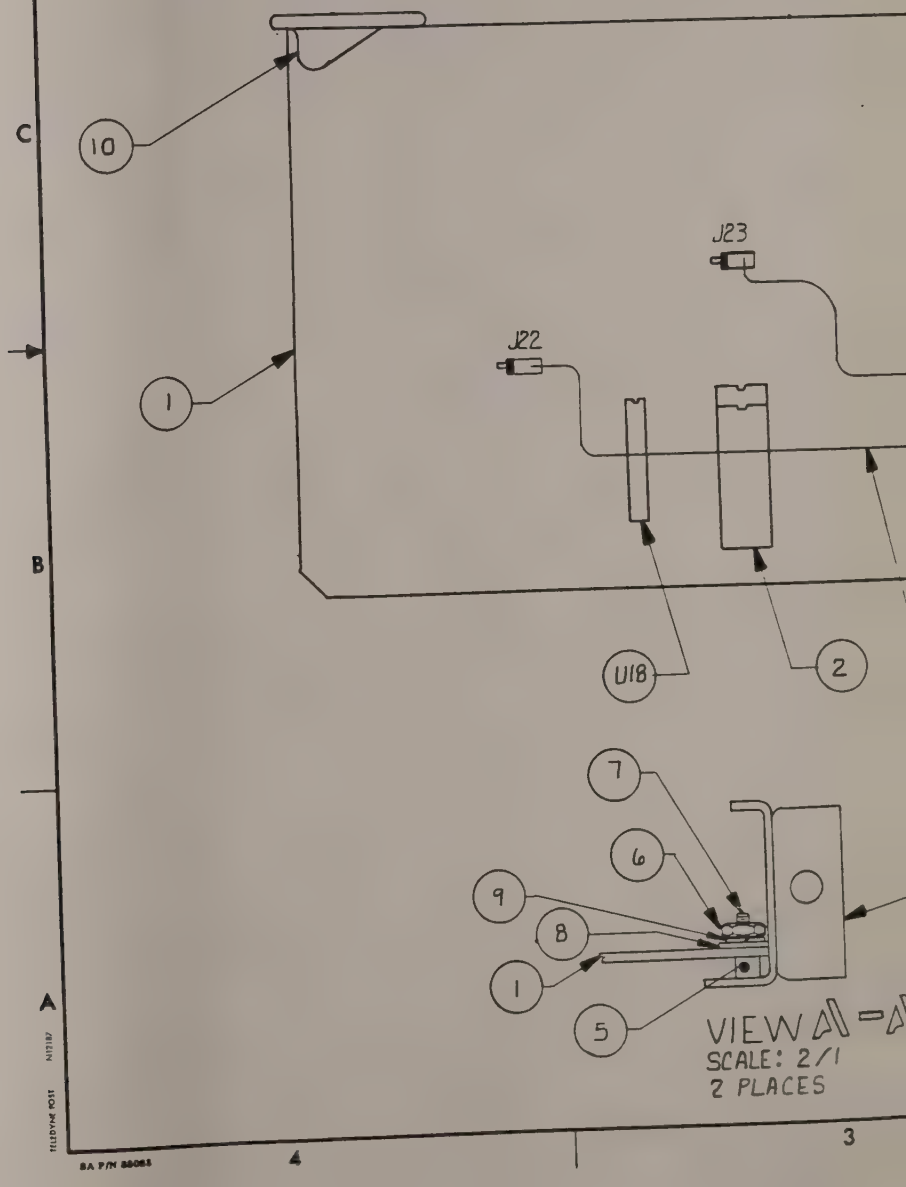

APPLICATION		
QTY REQD	NEXT ASSY	USED ON
1	306200	AT9000

REVISIONS				
ZONE	REV	DESCRIPTION	DATE	APPROVED
	-	INITIAL RELEASE		
	A	ECO 10685 : 10748	9-11-89	
	B	ECO 10824, 10813	10-5-89	J.M. Faber
	C	ECO 10871-872, 10843 & 10795-97	11/14/89	J. Mafaber
	D	ECO 12740	7/10/90	J.Mafaber
	E	ECO 12908	5/14/91	J.Mafaber
	F	ECR 15029.	6/28/91	J.Mafaber

NOTES:

1. ORIENT J5, J6, J22, J23 AS SHOWN ON DRAWING.
2. INSTALL W1, W2 WITH SIDE EXIT CABLE POSITIONED AS SHOWN.

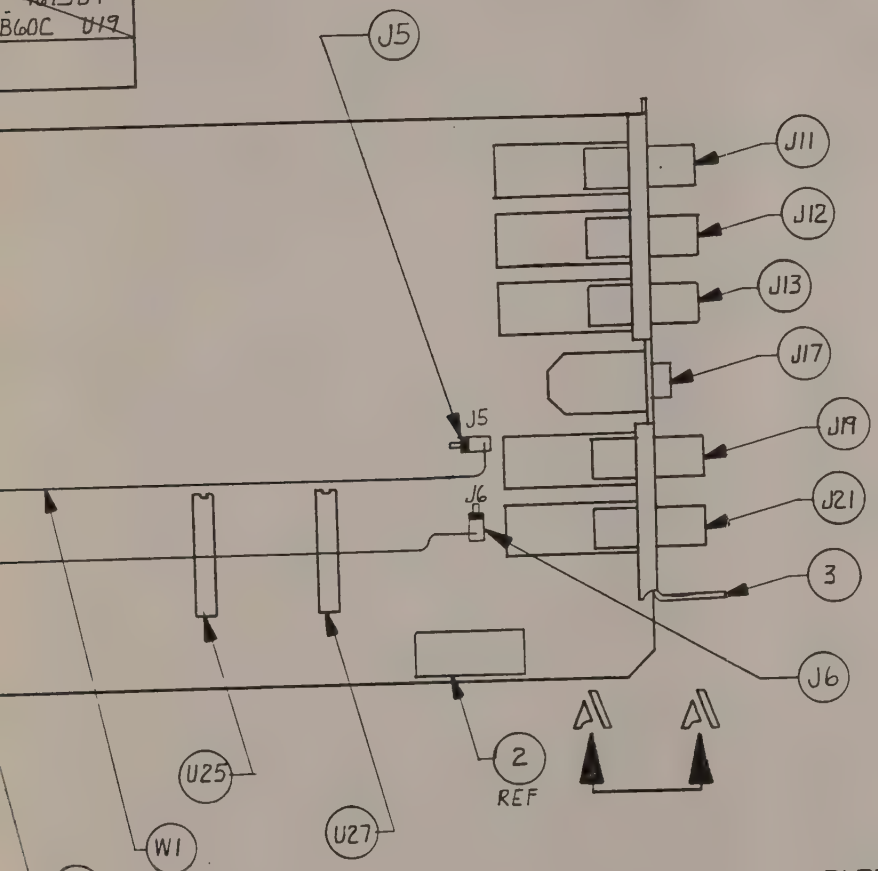

SEE SEPARATE PARTS LIST

ITEM OR FIND NO.	QTY REQD	S-A STOCK NO.	NOMENCLATURE OR DESCRIPTION	MATL SPEC AND SIZE OR COMPONENT VALUE	IDENTIFYING OR PART NO	FSCM NO

PARTS LIST

UNLESS OTHERWISE SPECIFIED ALL CAPACITORS ARE IN MICROFARADS AND ALL RESISTORS ARE IN OHMS ±10% AND 1/4 WATT

LAST REFERENCE DESIGNATION USED

C	CR	J	K
Q	R	S	U

ALL DIMENSIONS ARE IN INCHES UNLESS OTHERWISE SPECIFIED

TOLERANCES
3 PLACE DECIMAL ± .005
2 PLACE DECIMAL ± .02
1 PLACE DECIMAL ± 1

FRACTIONS ± ANGLES ±0° 30'

MAX SURFACE ROUGHNESS 125 ALL MACHINED SURFACES EXCEPT AS NOTED

BREAK SHARP EDGES AND CORNERS .010 MAX

FINISH NONE

CONTRACT NO		
DWN	Ted Scott	5-9-89
ENGR	J.M. Faber	7/5/89
CHK	J.M. Faber	7-5-89
PROD		7-5-89
APVD	B Davidson	
APVD		

Scientific-Atlanta 3845 Pleasantdale Road Atlanta, Georgia 30340

PWB ASSY - TRANSMITTER

DAC

SIZE	FSCM NO	DWG NO	REV
C	10110	309124	F
SCALE 1/1		SHEET 1 OF 1	

DWG NO 309124 SH 1 REV E

NOTES:

1. MOUNT ITEM 2 UNDER U1 AND U8 BEFORE WAVE SOLDER.
2. MASK ALL TRIANGLE HOLES TO PREVENT FILLING WITH SOLDER. (21 PLACES)
3. INSTALL AFTER WAVE SOLDER U4, U5, U6, U12, U13, U14, U21, U22 U23, U24, U26.
4. SOLDER C5 AND C21 ON BACKSIDE OF PWB.
5. ORIENT J22 J23 AS SHOWN ON DRAWING.
6. INSTALL ON NEXT ASSEMBLY: U18, U19, U25, U27.

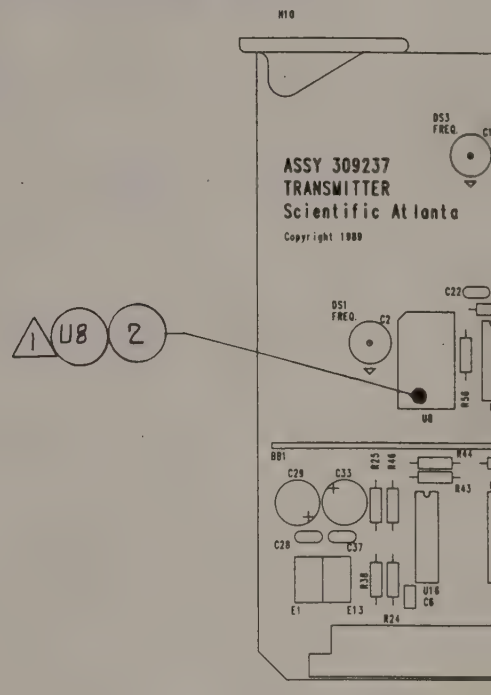

PN309236
REV A

SILKSC

NEXT ASSEMBLIES		
1	309123	AT9500
1	309124	AT9000

REV	DESCRIPTION	APPROVAL	DATE
[illegible]	[illegible] 0748 ECO10636	[illegible]	9/5 [illegible]
[illegible]	[illegible] 524 ECO 10814	[illegible]	10/5/89
C	ECO 10843, 10887	[illegible]	11/[illegible]
[illegible]	[illegible]	[illegible]	12/8/89
E	ECO 11087, ECO11003	[illegible]	7/10/90
[illegible]	[illegible] 12917 12941	[illegible]	[illegible]

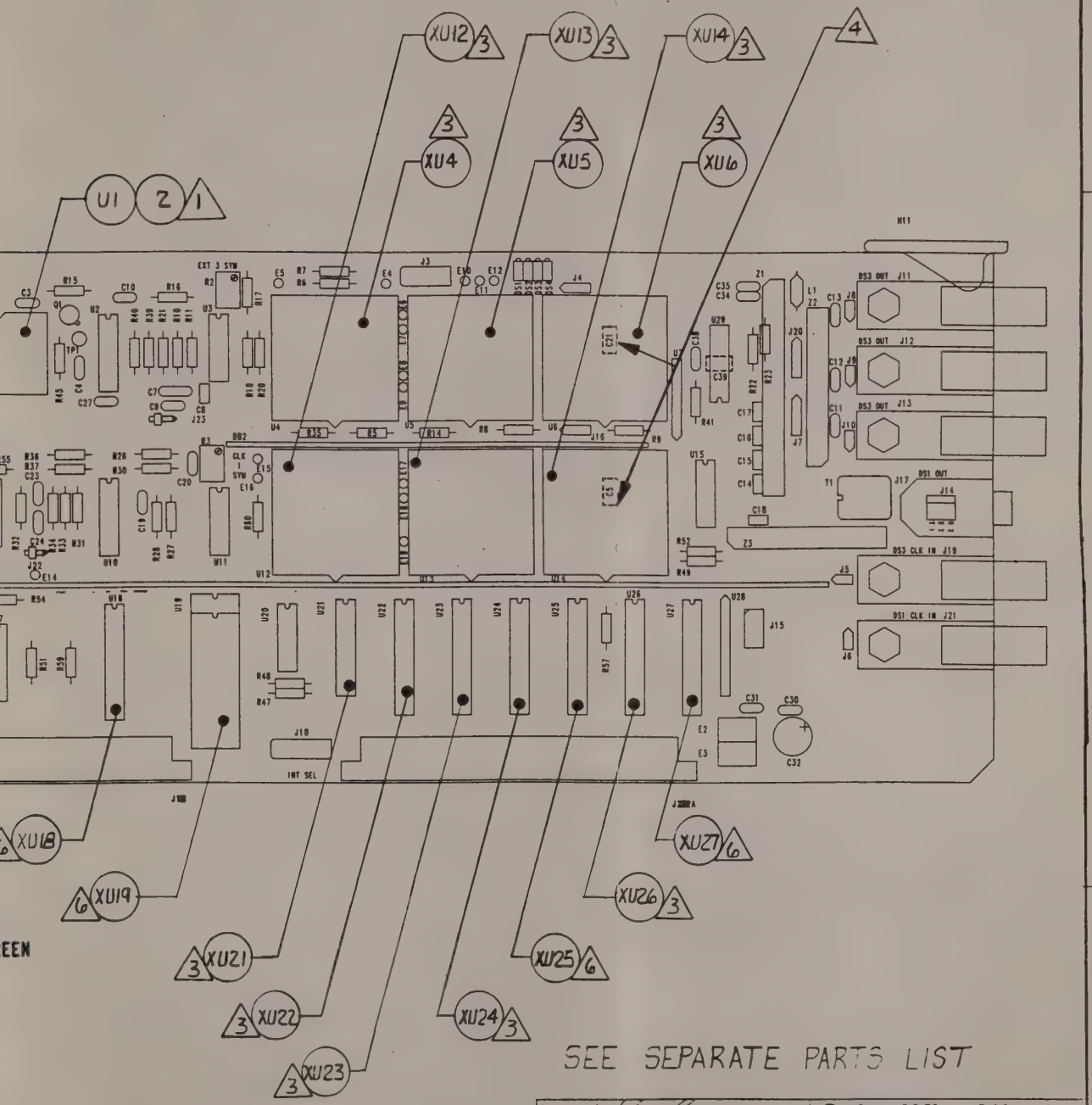

SEE SEPARATE PARTS LIST

DWN	[illegible]	7-7-89	**Scientific-Atlanta**
ENGR	[illegible]	7/7/89	P.O.BOX 105027 ATLANTA, GA 303[illegible]
CHK	[illegible]	7-7-89	SUB-ASSY PWB
PROD	[illegible]	[illegible]-18-89	TRANSMITTER DTA
APVD	[illegible]	FSCM NO.	SCALE [illegible] DWG. NO. 309237 REV F
SOURCE		10110	SHT [illegible]

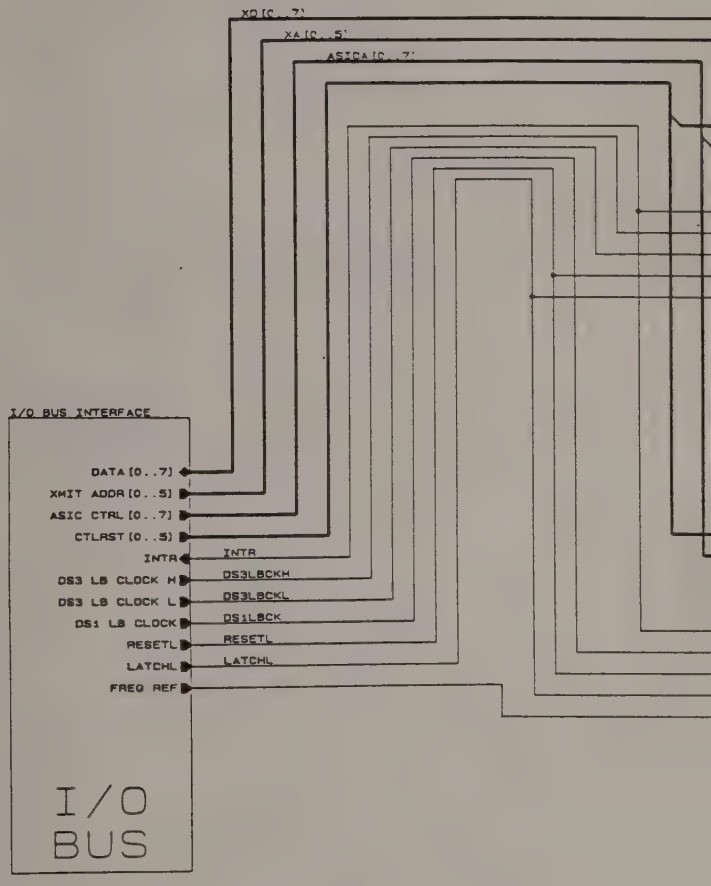
XD[0..7]
XA[0..5]
ASICA[0..7]
I/O BUS INTERFACE
DATA[0..7]
XMIT ADDR[0..5]
ASIC CTRL[0..7]
CTLRST[0..5]
INTR
DS3 LB CLOCK H
DS3 LB CLOCK L
DS1 LB CLOCK
RESETL
LATCHL
FREQ REF
INTR
DS3LBCKH
DS3LBCKL
DS1LBCK
RESETL
LATCHL
I/O
BUS

APPLICATION		
QTY REQD	NEXT ASSY	USED ON
0	A309237	AT9000
0	A309237	AT9500

REVISIONS			
SYM	DESCRIPTION	DATE	APPROVED
B	ECO 10814	10/05/89	T.M. FABER
C	ECO 10887	11/16/89	T.M. Faber
D	INC ECN 12941.	8/16/91	T.M. Faber

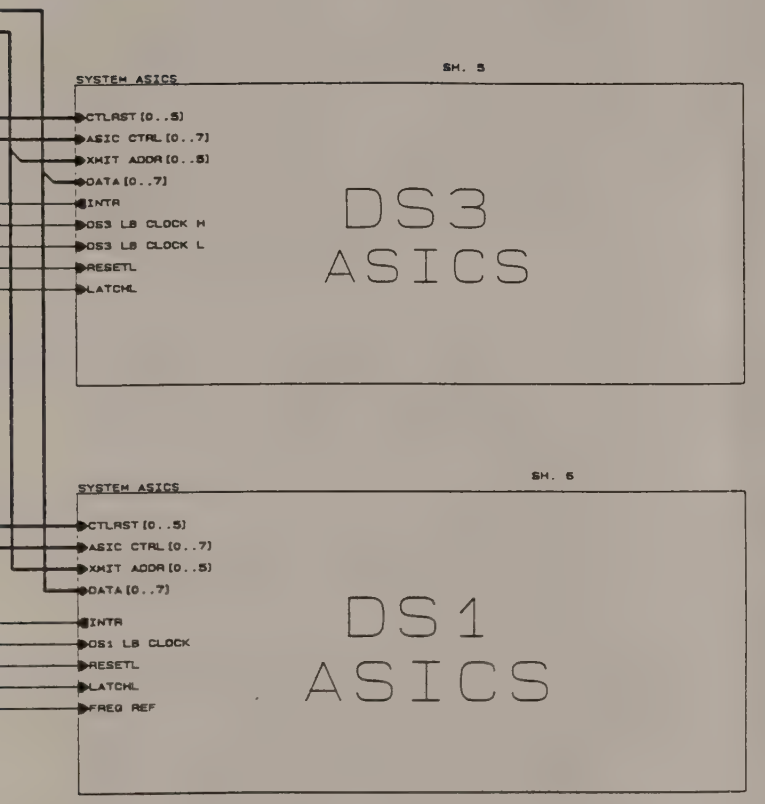

/*BINCRC=0x6678*/

DWN	JOE LITTLE	06/20/89
ENGR	THOMAS M. FABER	06/27/89
CHK	JANICE COKER	06/27/89
PROD	JAMES HOLLAND	06/30/89
APVD	B. SPRINKLE	
SOURCE	OrCAD	FSCM NO. 10110

SCIENTIFIC-ATLANTA, INC.
INSTRUMENTATION DIVISION
4388 SHACKLEFORD RD.
NORCROSS, GA 30093

Title: TRANSMIT CARD: TOP LEVEL

Size	Document Number	REV
C	A309235	D

Date: November 15, 1989 Sheet: 1 of 8

TXMI

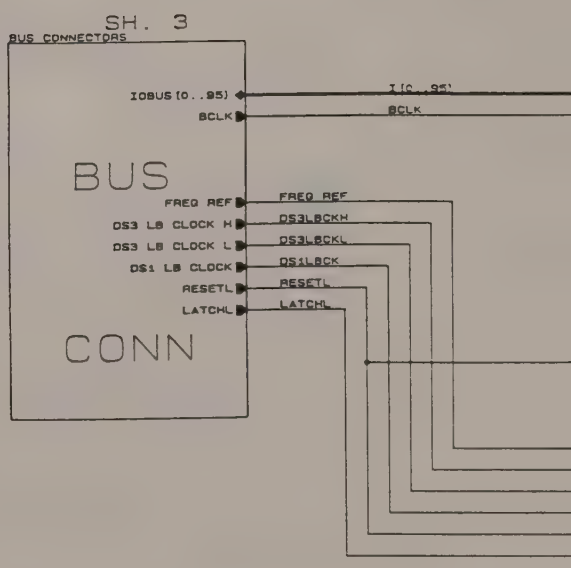
SH. 3
BUS CONNECTORS
IOBUS[0..95]
BCLK
BUS
FREQ REF
DS3 LB CLOCK H
DS3 LB CLOCK L
DS1 LB CLOCK
RESETL
LATCHL
CONN
I[0..95]
BCLK
FREQ REF
DS3LBCKH
DS3LBCKL
DS1LBCK
RESETL
LATCHL

T BUS

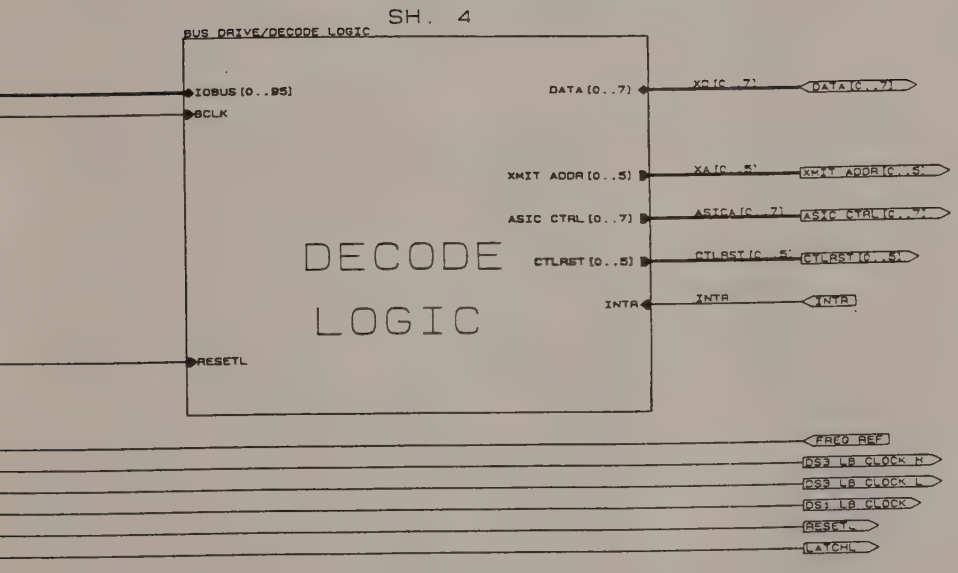

/*BINCRC=0x7B9C*/

SCIENTIFIC-ATLANTA INC INSTRUMENTATION DIVISION 4388 SHACKLEFORD RD. NORCROSS, GA 30093	
Title TRANSMIT CARD: BUS INTERFACE INTERCONNECT	
Size Document Number C A309235	REV D
Date November 15, 1989 Sheet 2 of 6	

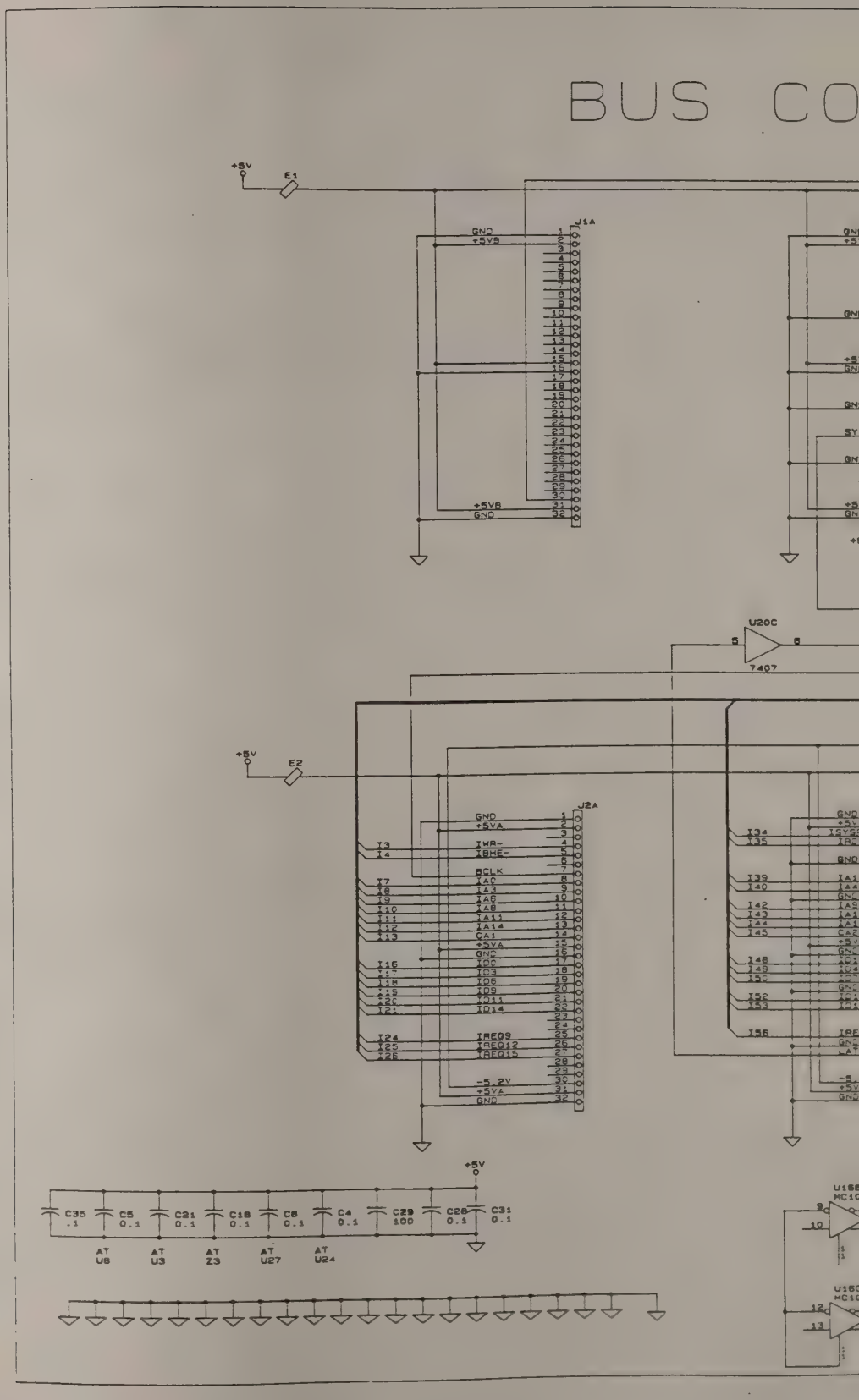
BUS CO
+5V
E1
J1A
GND
+5VB
+5VB
GND
U20C
7407
+5V
E2
J2A
GND
+5VA
IWR-
IBME-
BCLK
IA0
IA3
IA6
IA8
IA11
IA14
CA1
+5VA
GNC
ID0
ID3
ID6
ID9
ID11
ID14
IREQ09
IREQ12
IREQ15
-5.2V
+5VA
GND
+5V
C35 .1
C5 0.1
C21 0.1
C18 0.1
C6 0.1
C4 0.1
C29 100
C28 0.1
C31 0.1
AT U8
AT U3
AT Z3
AT U27
AT U24

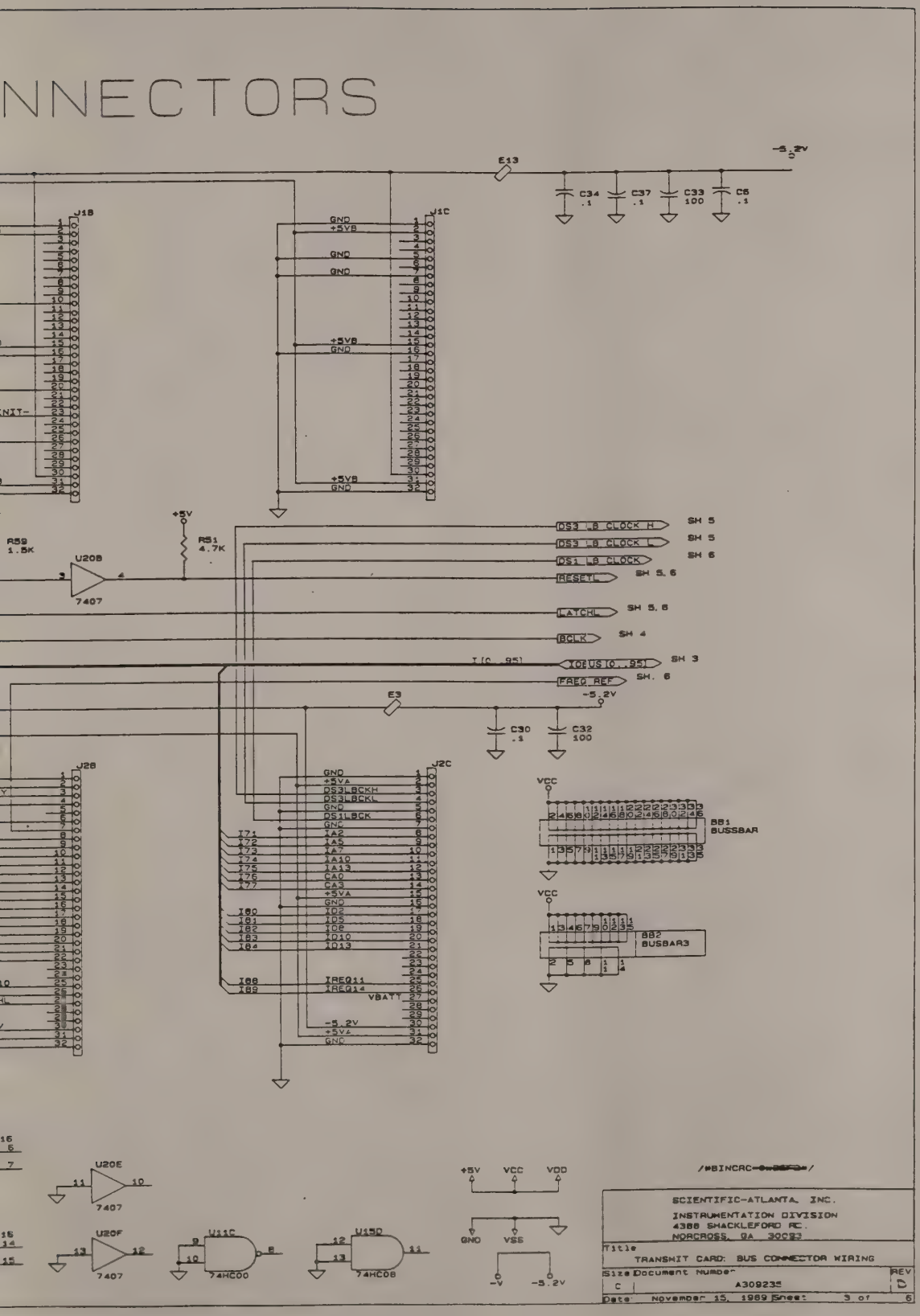
NNECTORS
E13
-5.2V
C34 .1
C37 .1
C33 100
C6 .1
J1B
J1C
GND
+5VB
+5V
R59 1.5K
R51 4.7K
U20B
7407
DS3 LB CLOCK H
DS3 LB CLOCK L
DS1 LB CLOCK
RESETL
LATCHL
BCLK
SH 5
SH 6
SH 5, 6
SH 4
SH 3
SH. 6
FREQ REF
E3
C30 .1
C32 100
J2B
J2C
VCC
BB1 BUSSBAR
BB2 BUSSBAR3
VBATT
U20E
U20F
U11C
U15D
74HC00
74HC08
SCIENTIFIC-ATLANTA, INC.
INSTRUMENTATION DIVISION
4386 SHACKLEFORD RD.
NORCROSS, GA 30093
TRANSMIT CARD: BUS CONNECTOR WIRING
A309235
November 15, 1989
3 of 6

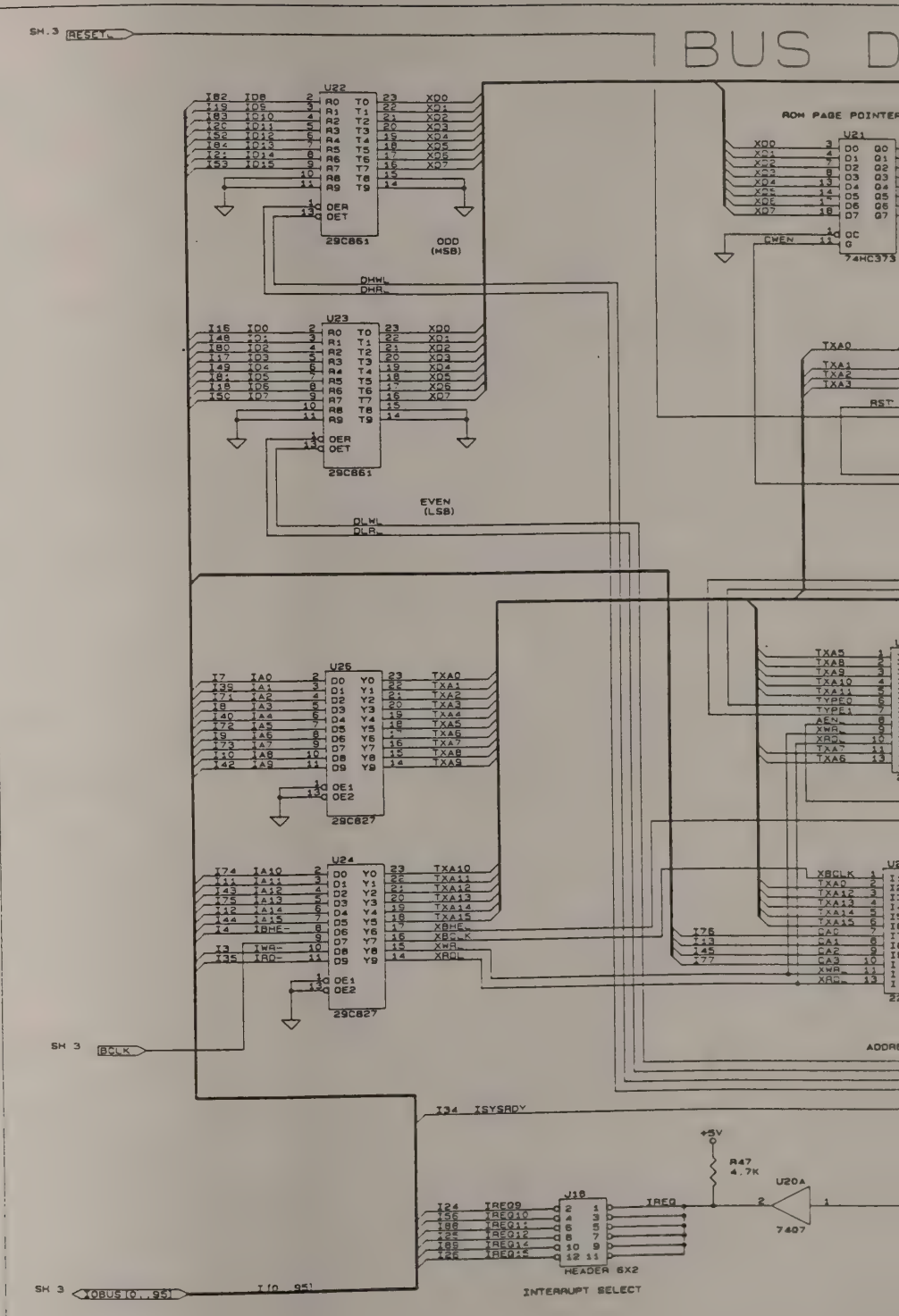
BUS D
SH.3
RESET_
U22
29C861
ODD
(MSB)
DHWL
DHR_
U23
29C861
EVEN
(LSB)
DLWL
DLR_
ROM PAGE POINTER
U21
74HC373
CWEN
TXA0
TXA1
TXA2
TXA3
RST
U25
29C827
U24
29C827
SH 3
BCLK
I34 ISYSRDY
+5V
R47
4.7K
U20A
7407
U18
HEADER 6X2
INTERRUPT SELECT
IREQ
SH 3
IOBUS[0..95]
I/O .95]

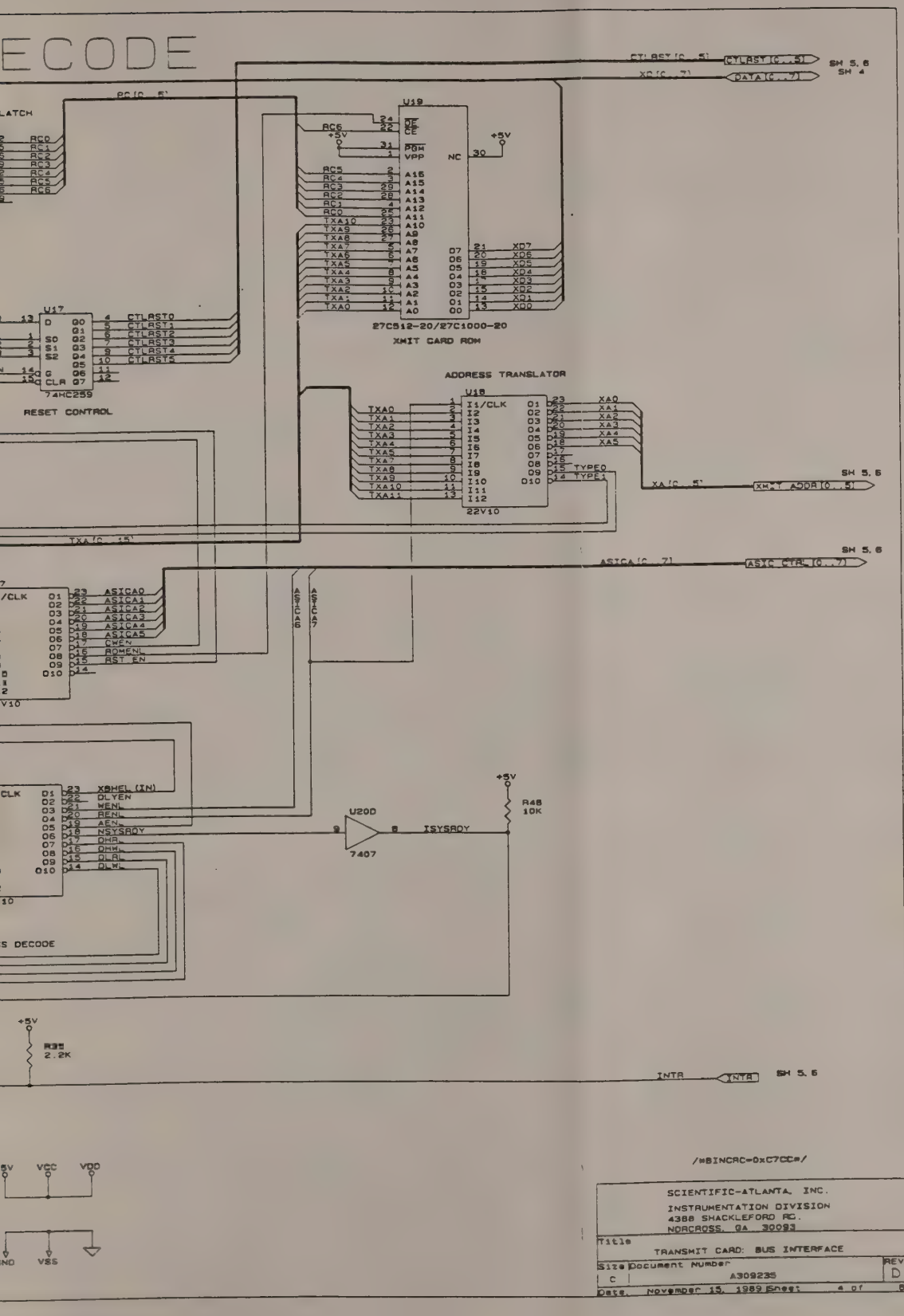
ECODE
LATCH
U19
27C512-20/27C1000-20
XMIT CARD ROM
U17
74HC259
RESET CONTROL
ADDRESS TRANSLATOR
U18
22V10
SH 5, 6
SH 4
XMIT ADDR[0..5]
ASIC CTRL[0..7]
U20D
7407
ISYSRDY
R48
10K
R35
2.2K
INTR
VCC
VDD
VSS
/*BINCRC=0xC7CC*/
SCIENTIFIC-ATLANTA, INC.
INSTRUMENTATION DIVISION
4388 SHACKLEFORD RD.
NORCROSS, GA 30093
Title
TRANSMIT CARD: BUS INTERFACE
Size
C
Document Number
A309235
REV
D
Date. November 15, 1989
Sheet 4 of 8

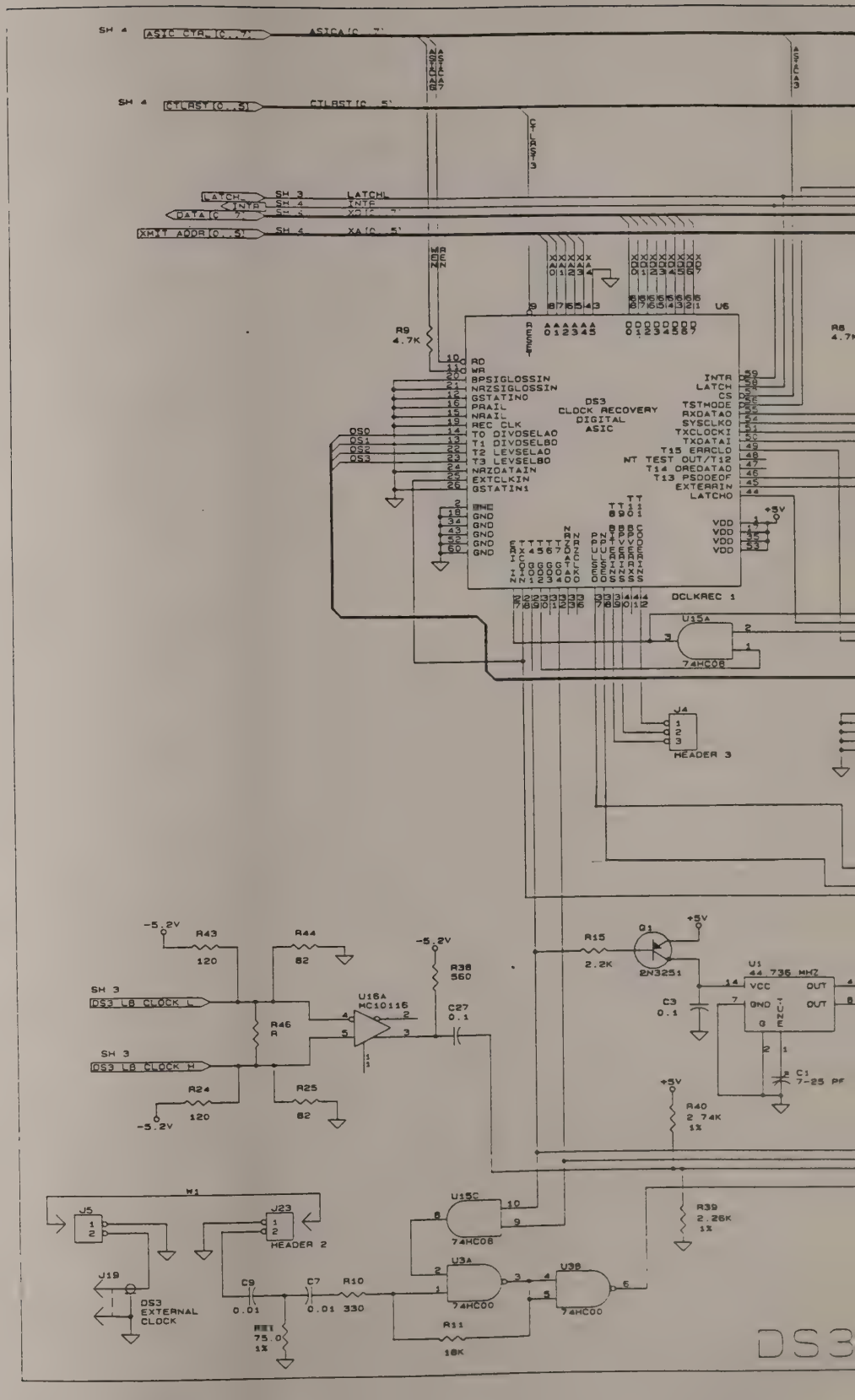
SH 4
ASIC CTR_IC..7
SH 4
CYLAST IC..5
LATCH
SH 3
LATCHL
INTP
SH 4
INTP
DATA
XMIT ADDR IC..5
SH 4
XA IC..5
U6
DS3
CLOCK RECOVERY
DIGITAL
ASIC
R9
4.7K
RD
WR
BPSIGLOSSIN
NRZSIGLOSSIN
GSTATIN0
PRAIL
NRAIL
REC CLK
T0 DIVOSELA0
T1 DIVOSELB0
T2 LEVSELA0
T3 LEVSELB0
NRZDATAIN
EXTCLKIN
GSTATIN1
DS0
DS1
DS2
DS3
INTR
LATCH
CS
TSTMODE
RXDATA0
SYSCLK0
TXCLOCKI
TXDATAI
T15 ERRCLO
T12 TEST OUT/T12
T14 DREDATA0
T13 PSDOEOF
EXTERAIN
LATCH0
VDD
GND
DCLKREC 1
U15A
74HC08
J4
HEADER 3
-5.2V
R43
120
R44
82
R46
A
SH 3
DS3 LB CLOCK L
SH 3
DS3 LB CLOCK H
U16A
MC10116
R38
560
C27
0.1
R24
120
R25
82
R15
2.2K
Q1
2N3251
+5V
U1
44.736 MHZ
VCC
GND
OUT
OUT
TUNE
C3
0.1
C1
7-25 PF
R40
2.74K
1%
R39
2.26K
1%
M1
J5
J23
HEADER 2
J19
DS3
EXTERNAL
CLOCK
C9
0.01
C7
0.01
R10
330
R11
10K
R81
75.0
1%
U15C
74HC08
U3A
74HC00
U3B
74HC00
DS3

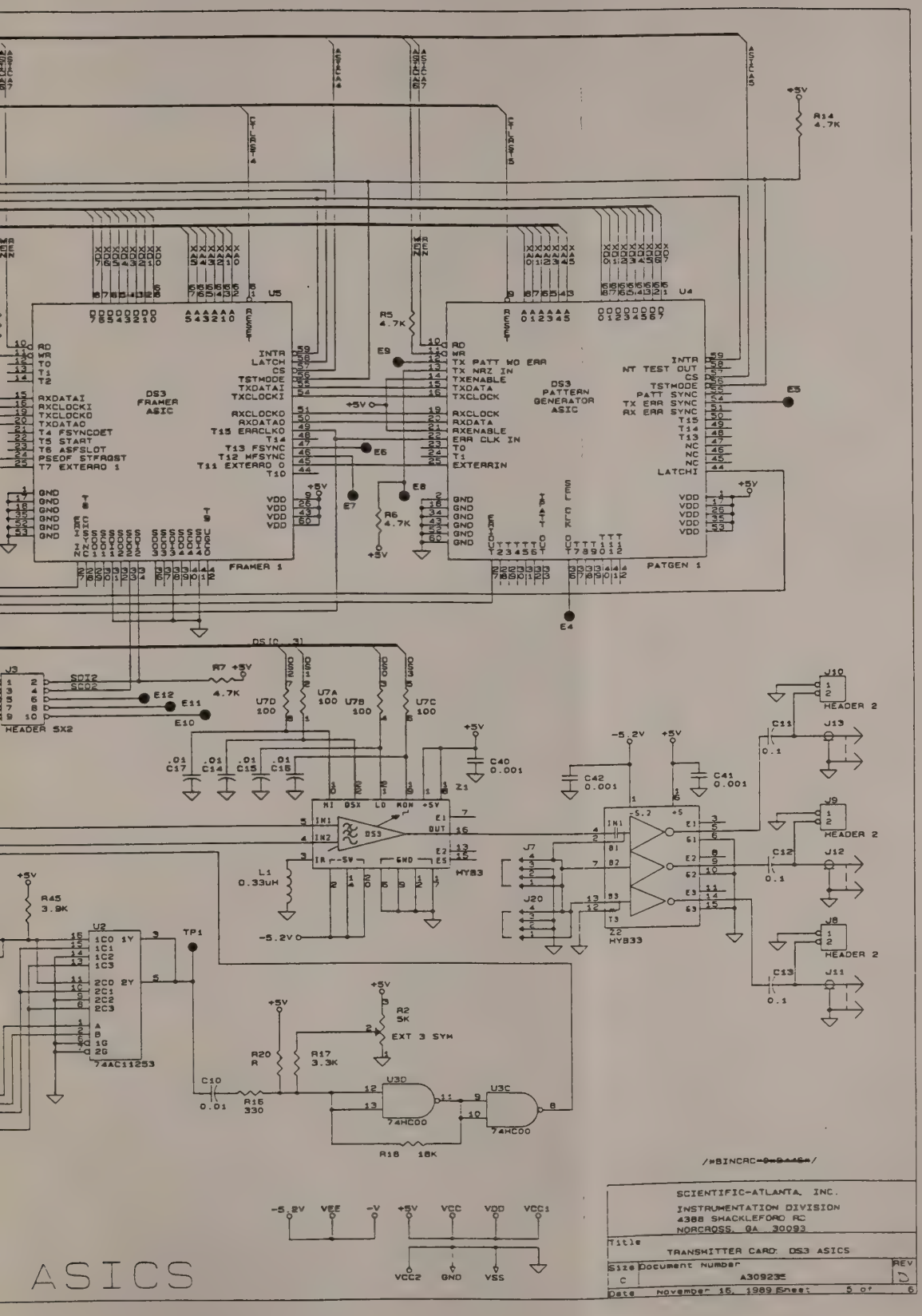
DS3 FRAMER ASIC
FRAMER 1
DS3 PATTERN GENERATOR ASIC
PATGEN 1
HEADER 5X2
HEADER 2
74AC11253
74HC00
HYB33
EXT 3 SYM
SCIENTIFIC-ATLANTA, INC.
INSTRUMENTATION DIVISION
4388 SHACKLEFORD RD
NORCROSS, GA 30093
TRANSMITTER CARD: DS3 ASICS
A30923E
November 16, 1989
ASICS

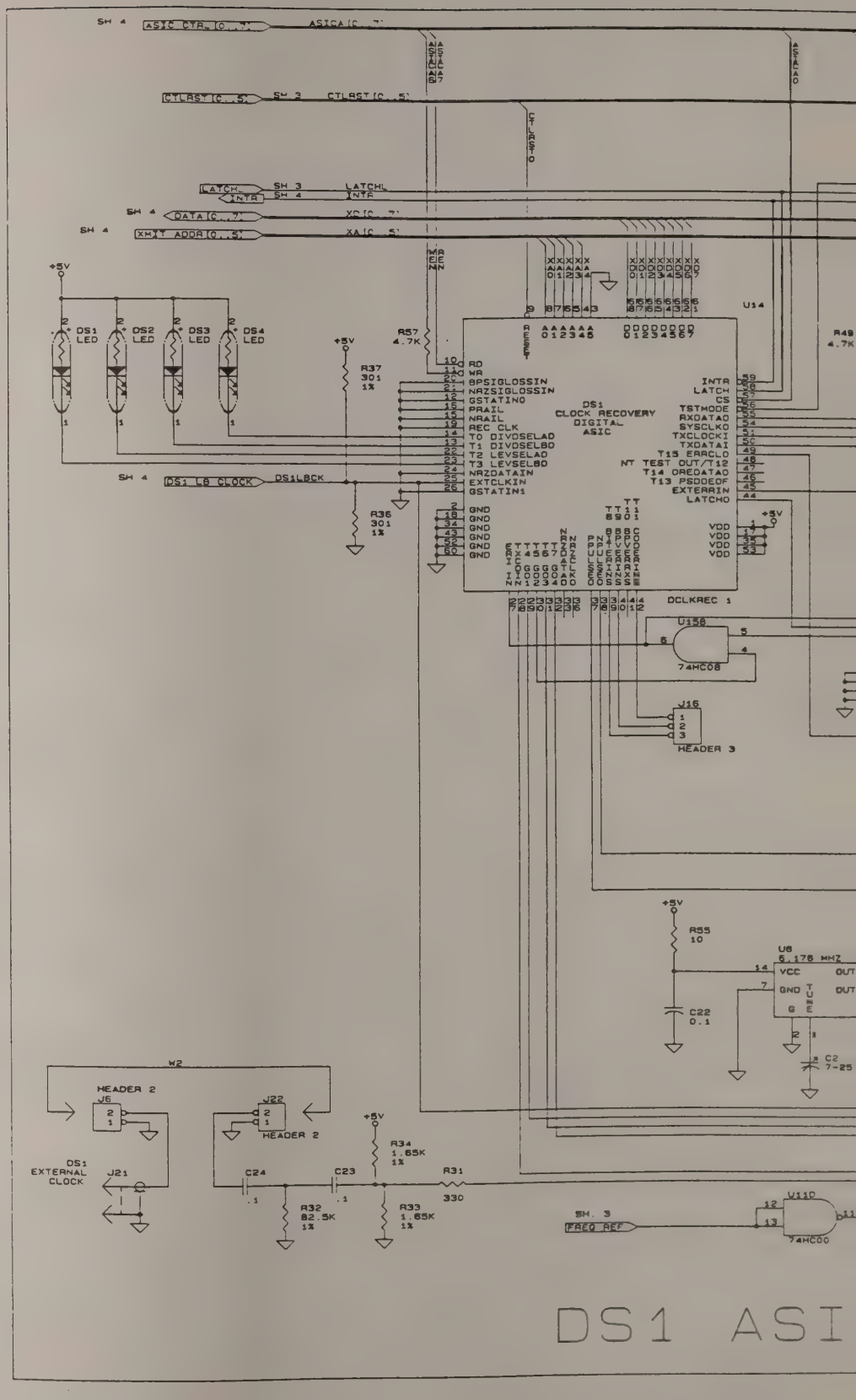
DS1 ASI

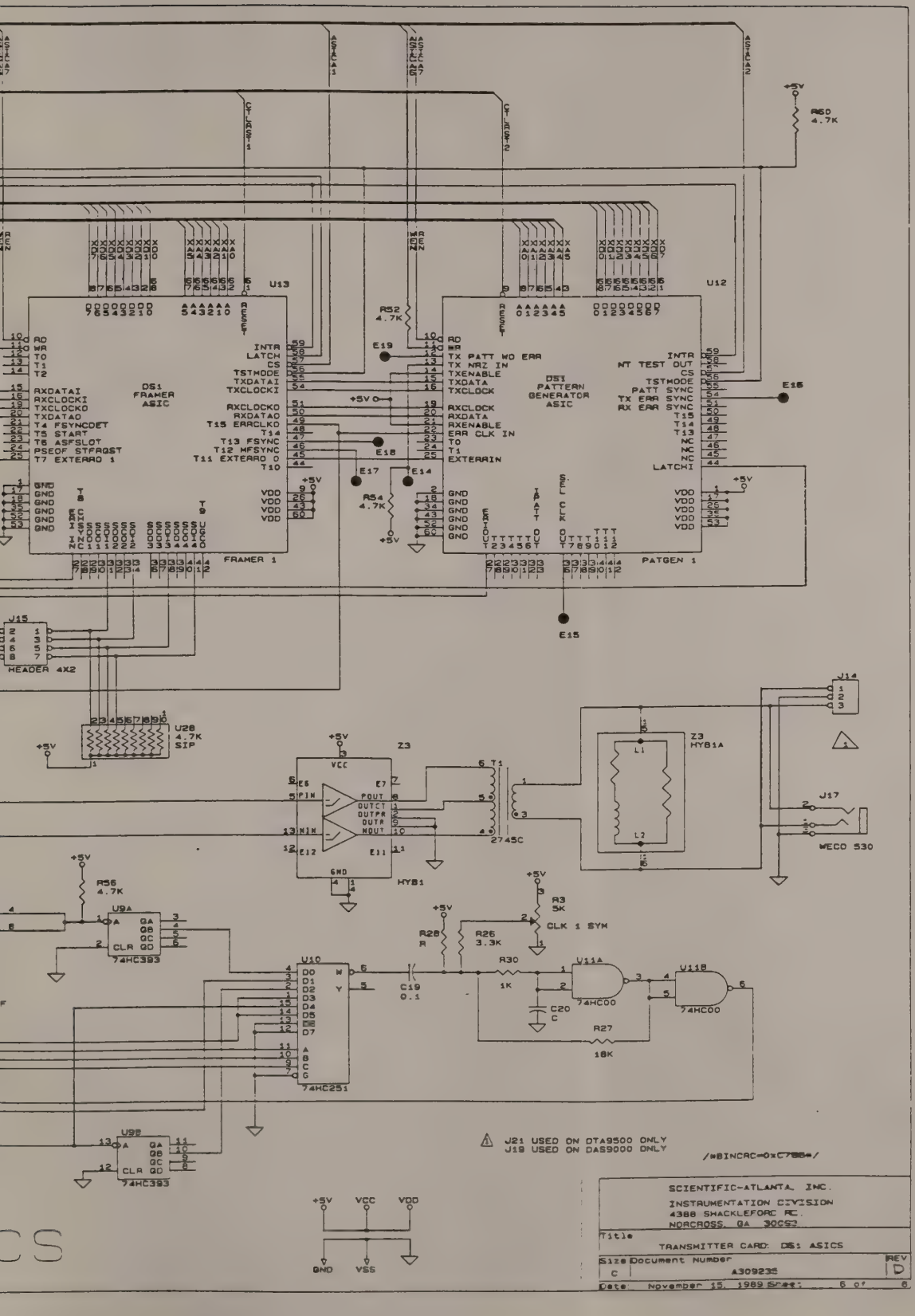
U13
DS1
FRAMER
ASIC
FRAMER 1
U12
DS3
PATTERN
GENERATOR
ASIC
PATGEN 1
R50
4.7K
R52
4.7K
R54
4.7K
E19
E17
E14
E18
E16
E15
+5V
U15
HEADER 4X2
U28
4.7K
SIP
Z3
HYB1
Z3
HYB1A
2745C
J14
J17
WECO 530
R56
4.7K
U9A
74HC393
R28
R
R26
3.3K
R3
5K
CLK 1 SYM
U10
74HC251
C19
0.1
R30
1K
U11A
74HC00
U11B
74HC00
C20
C
R27
18K
U9B
74HC393
J21 USED ON DTA9500 ONLY
J19 USED ON DAS9000 ONLY
/*BINCAC=0xC7BB*/
SCIENTIFIC-ATLANTA, INC.
INSTRUMENTATION DIVISION
4388 SHACKLEFORD RD.
NORCROSS, GA 30093
Title
TRANSMITTER CARD: DS1 ASICS
Size C
Document Number A309235
REV D
Date: November 15, 1989 Sheet: 6 of 8
+5V
VCC
VDD
GND
VSS

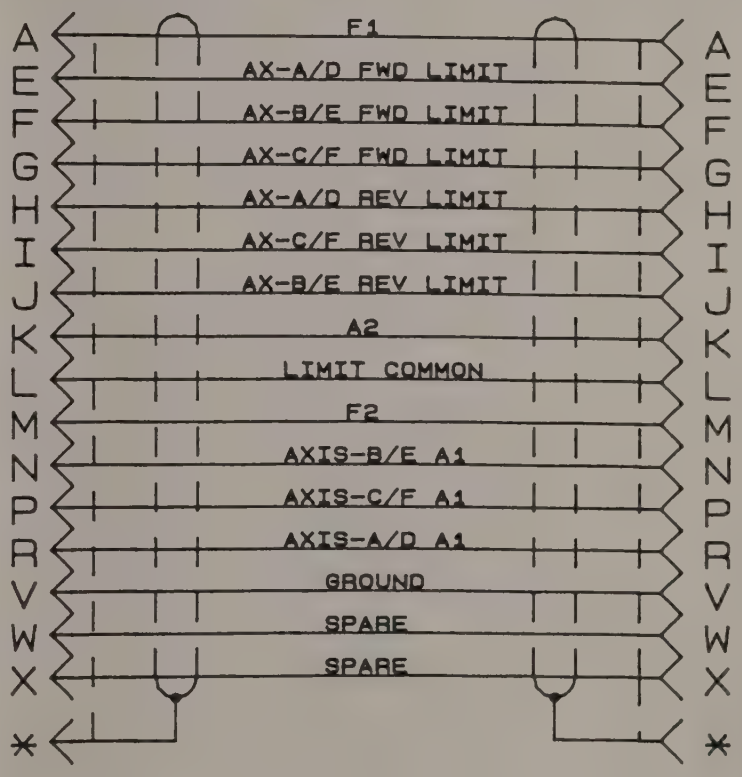

NOTES:

* DENOTES THE CONNECTOR SHELL.

1. ASSEMBLE SHRINKABLE BOOTS PER 158482.

D
E
C
P
A
S

REVISIONS			
SYM	DESCRIPTION	DATE	APPROVED

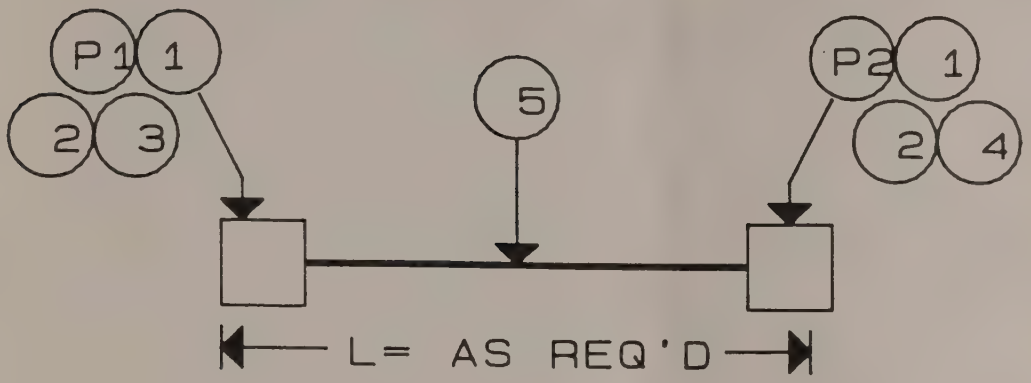

ITEM	QTY	SA STK NO.	DESCRIPTION	SPEC AND SIZE OR VALUE	IDENTIFYING NO.
5	A/R	87400	CABLE, SHIELDED	16-COND, 16 AWG.	
4	1	86481	CONN. BOOT	STRAIGHT	
3	1	86482	CONN. BOOT	RIGHT ANGLE	
2	2	310105	SOLDER RING		
1	2	310106	BACK SHELL		
P2	1	86396	CONNECTOR		M83106E-28-11S
P1	1	86399	CONNECTOR		M83106E-28-11P

PARTS LIST

IG		CABLE ASSEMBLY MOTORS/LIMITS THREE AXIS SHIELDED
	MAC MCDOWELL	4/27/89
IGR	MAC MCDOWELL	4/27/89
HK	ROBERT BAILEY	11/15/89
IOD		
PVD		FSCM NO. 10110
OURCE	ORCAD/SDT III	

Scientific-Atlanta Inc.
P.O.Box 105027 Atlanta, Ga. 30348

Size	Document Number	REV
A	309216	

Date: November 15, 1989 Sheet 1 of 1

NOTES:

1. AFTER WAVESOLDER INSTALL BT1, U1 U2, U3, U4, U5, U6, U7, U8, U11, U27, U30, U31, U32, U33, U34, U38, U41, U42, U43, U44, U45, S1, AND ITEM 2.
2. INSTALL ON NEXT ASSEMBLY U36, U37, U39, U40, U46, AND U47.
3. BEFORE INSTALLING SP1 ATTACH 2 0.25 LENGTHS OF ITEM 6 TO SP1 BY PRESSING ITEM 6 ONTO SP1 AS SHOWN: ENSURE SOLDER DOES NOT WICK UP FROM TERMINALS TO SP1 LUGS.

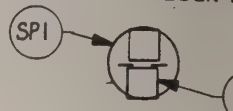

BOTTOM VIEW

4. MOUNT ITEM 5 UNDER U12 BEFORE WAVESOLDER.

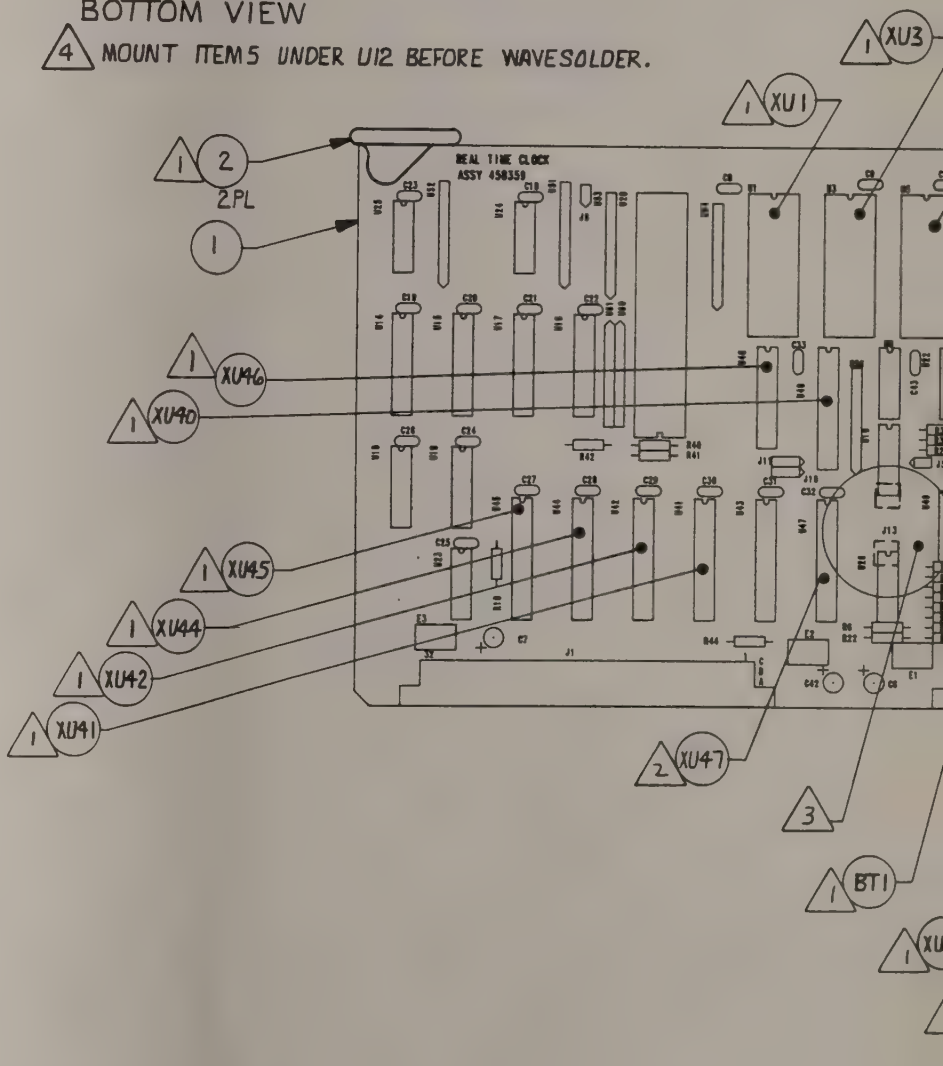

APPLICATION			REV	DESCRIPTION	APPROVAL	DATE
QTY	NEXT ASSY	USED ON				
1	306216	AT9000				
1	327968	AT9500				
1	306216	AT9500D				

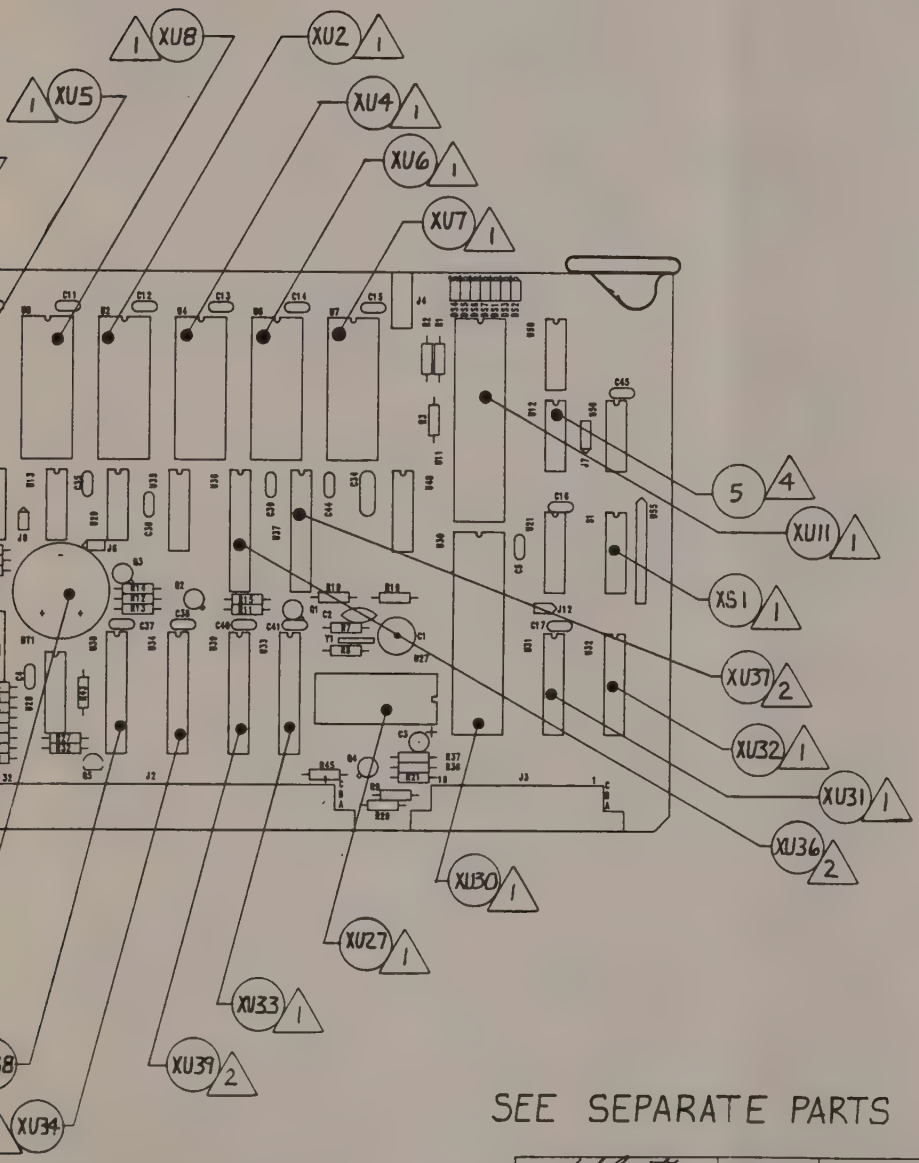

SEE SEPARATE PARTS LIST

DSN		7-25-90	Scientific Atlanta	
ENGR	Thomas McFadden	7/25/90	P.O. BOX 105027 ATLANTA, GA 30348	
CHK	Janice Coker	7-25-90	SUB-ASSY PWB RTC	
PROD	F. Murphy	7-25-90		
APVD			FSCM NO. 10110	SCALE 1/1 SHEET 1 OF 1
SOURCE				DWG. NO. 458359 REV

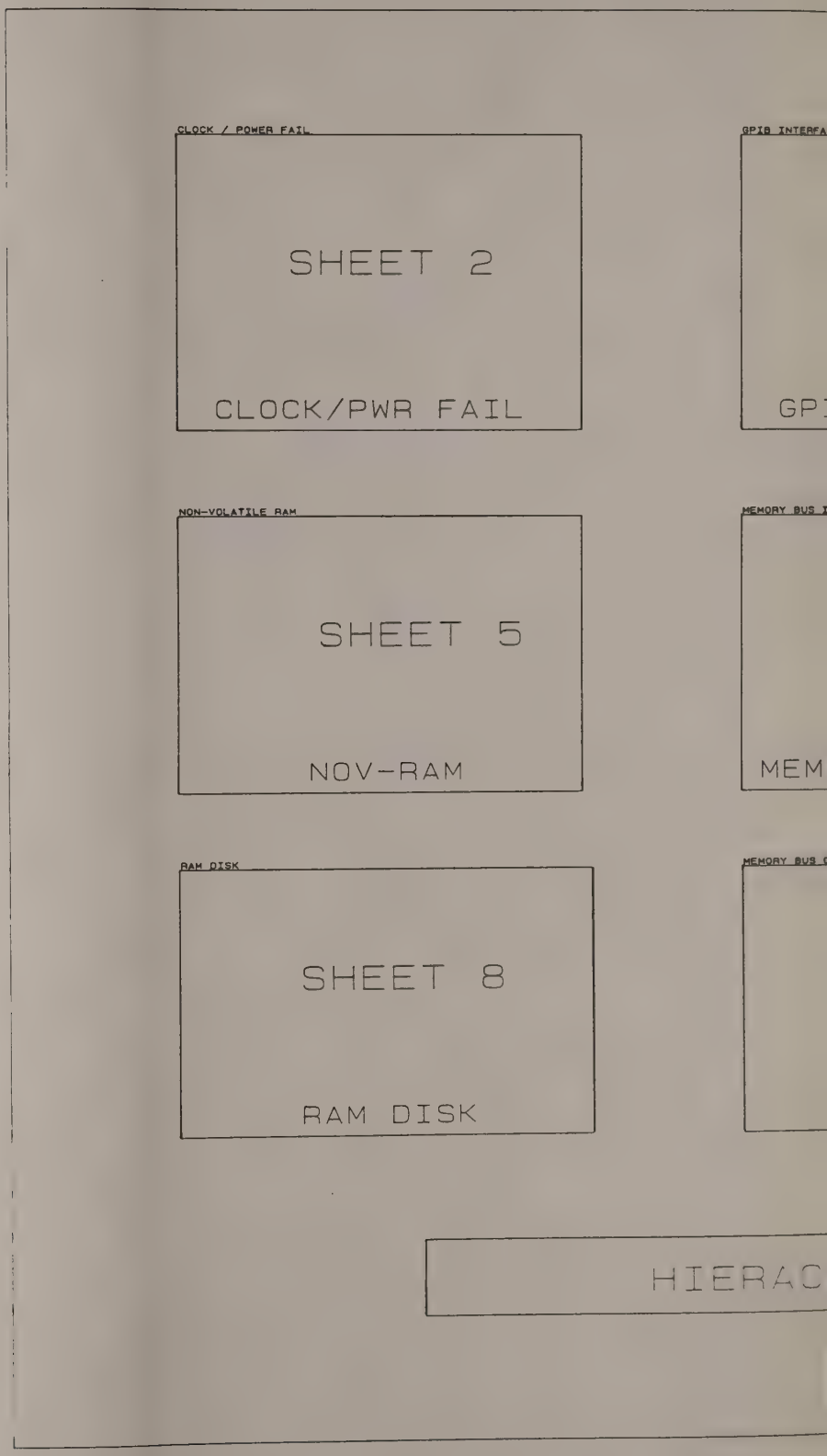
CLOCK / POWER FAIL
SHEET 2
CLOCK/PWR FAIL
GPIB INTERFA
GP
NON-VOLATILE RAM
SHEET 5
NOV-RAM
MEMORY BUS I
MEM
RAM DISK
SHEET 8
RAM DISK
MEMORY BUS
HIERAC

APPLICATION		
QTY REQD	NEXT ASSY	USED ON
0	327968	AT9500
0	327968	AT9500 (PORT)
[illegible]	306216	AT9000

REVISIONS				
ZONE	REV	DESCRIPTION	DATE	APVD
	–	SEE ECO		

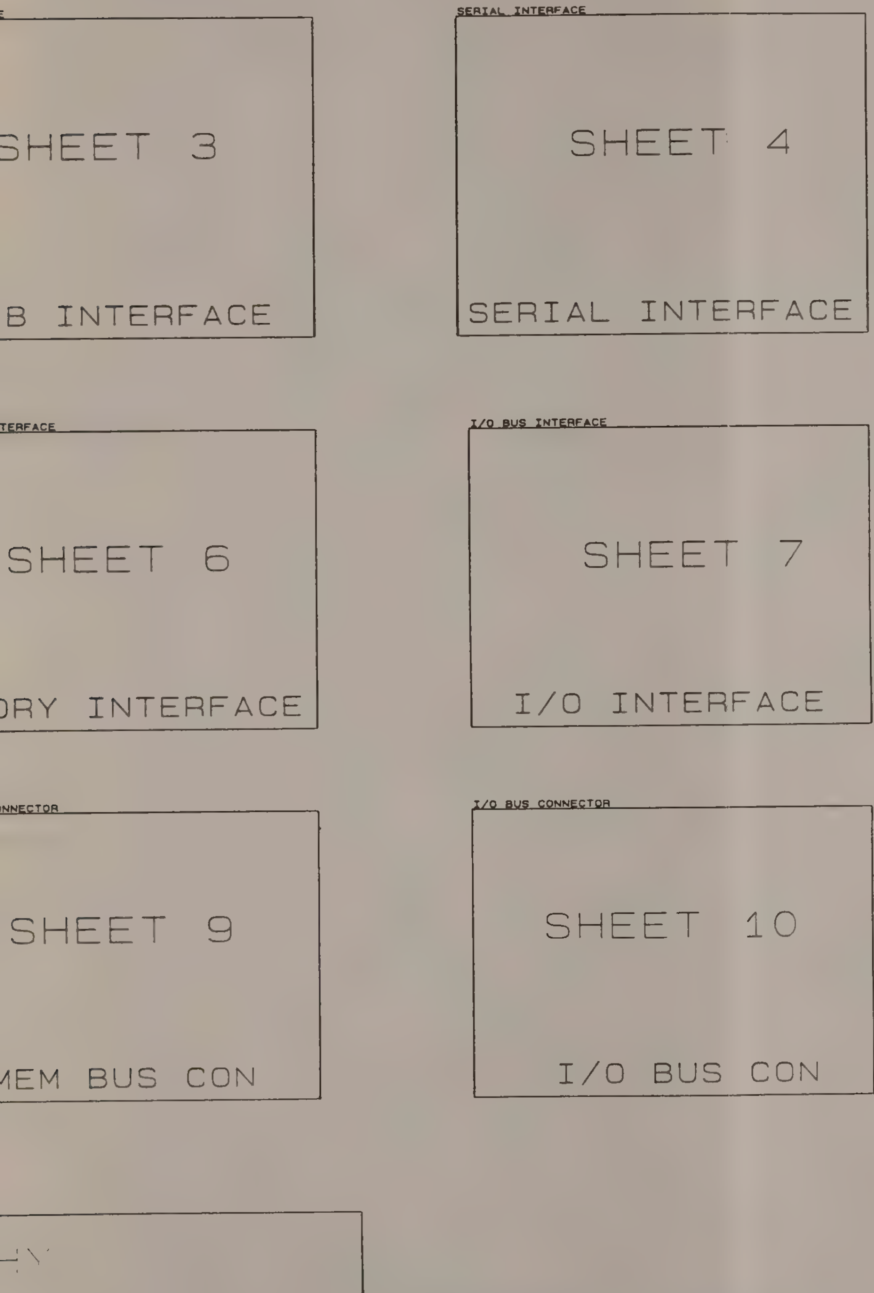

/*BINCRC=0xFD79*/

DWN	N. KAYTON	6-1-89
ENGR	[signature]	6/22/90
CHK	[signature]	6/22/90
PROD	[signature]	[illegible]
APVD	[signature]	9-[illegible]
APVD		

Scientific Atlanta
4388 SHACKLEFORD RD
NORCROSS, GA 30092

Title: REAL TIME CLOCK - BLOCK DIAGRAM

Size	Document Number	REV
C	A458358	

Date: March 30, 1990 Sheet 1 of 10

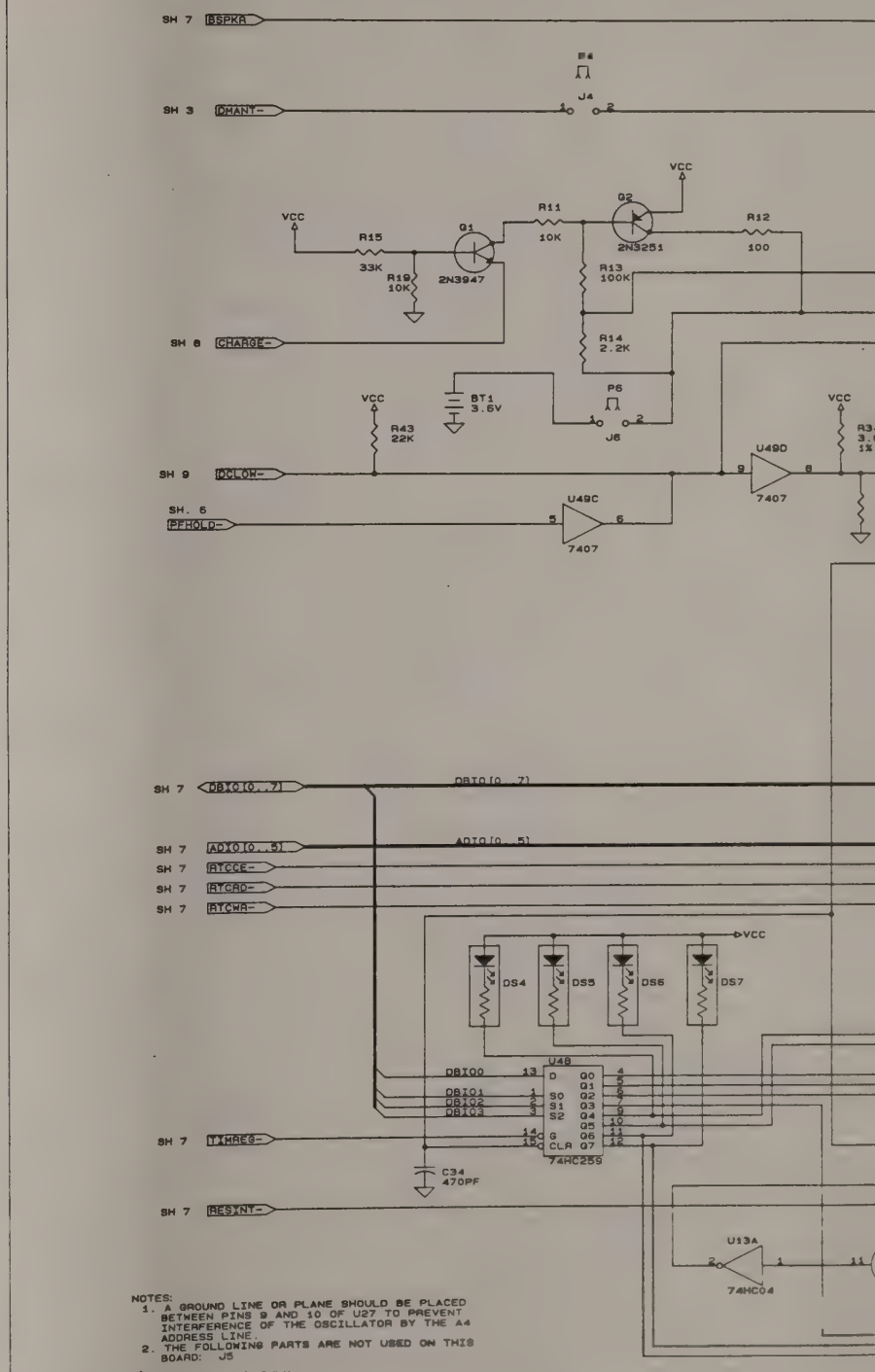

NOTES:
1. A GROUND LINE OR PLANE SHOULD BE PLACED BETWEEN PINS 9 AND 10 OF U27 TO PREVENT INTERFERENCE OF THE OSCILLATOR BY THE A4 ADDRESS LINE.
2. THE FOLLOWING PARTS ARE NOT USED ON THIS BOARD: J5

⚠1 AT9500 (DTA) ONLY.

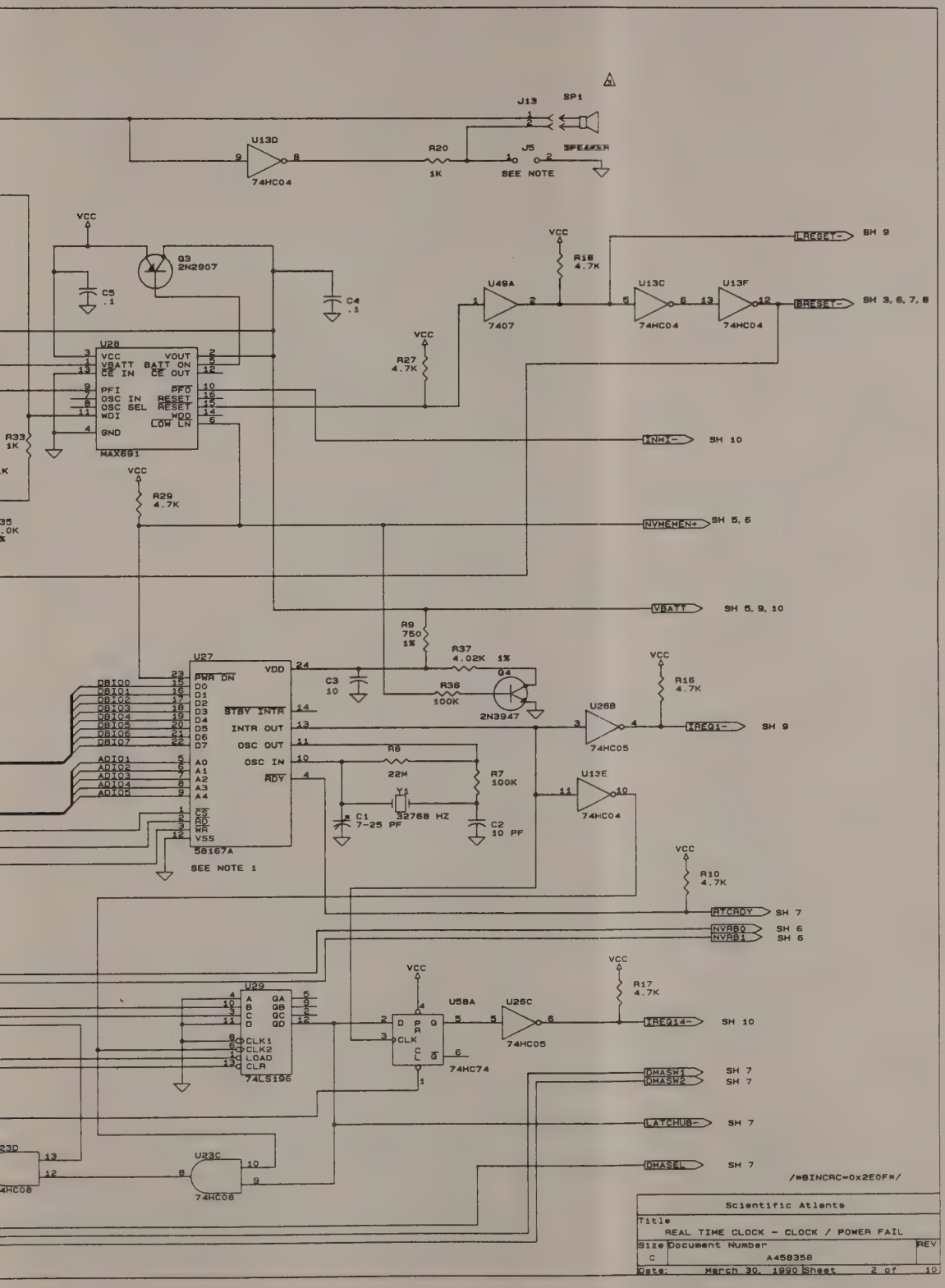
J13
SP1
U13D
74HC04
R20
1K
J5
SEE NOTE
VCC
Q3
2N2907
C5
.1
C4
.1
U28
MAX691
R27
4.7K
R33
1K
R29
4.7K
R18
4.7K
U49A
7407
U13C
74HC04
U13F
74HC04
LARESET-
SH 9
BARESET-
SH 3, 6, 7, 8
XNMI-
SH 10
NVMEMEN+
SH 5, 6
VBATT
SH 5, 9, 10
R9
750
1%
R37
4.02K 1%
R36
100K
Q4
2N3947
C3
10
U27
58167A
SEE NOTE 1
R16
4.7K
U26B
74HC05
XREQ1-
SH 9
R8
22M
R7
100K
Y1
32768 HZ
C1
7-25 PF
C2
10 PF
U13E
74HC04
R10
4.7K
AYCADY
SH 7
NVRB0
SH 6
NVRB1
SH 6
U29
74LS196
U58A
74HC74
U26C
74HC05
R17
4.7K
XREQ14-
SH 10
DMASW1
SH 7
DMASW2
SH 7
LATCHUB-
SH 7
DMASEL
SH 7
U23C
74HC08
/*BINCRC=0x2E0F*/
Scientific Atlanta
Title
REAL TIME CLOCK - CLOCK / POWER FAIL
Size
C
Document Number
A458358
REV
Date: March 30, 1990 Sheet 2 of 10

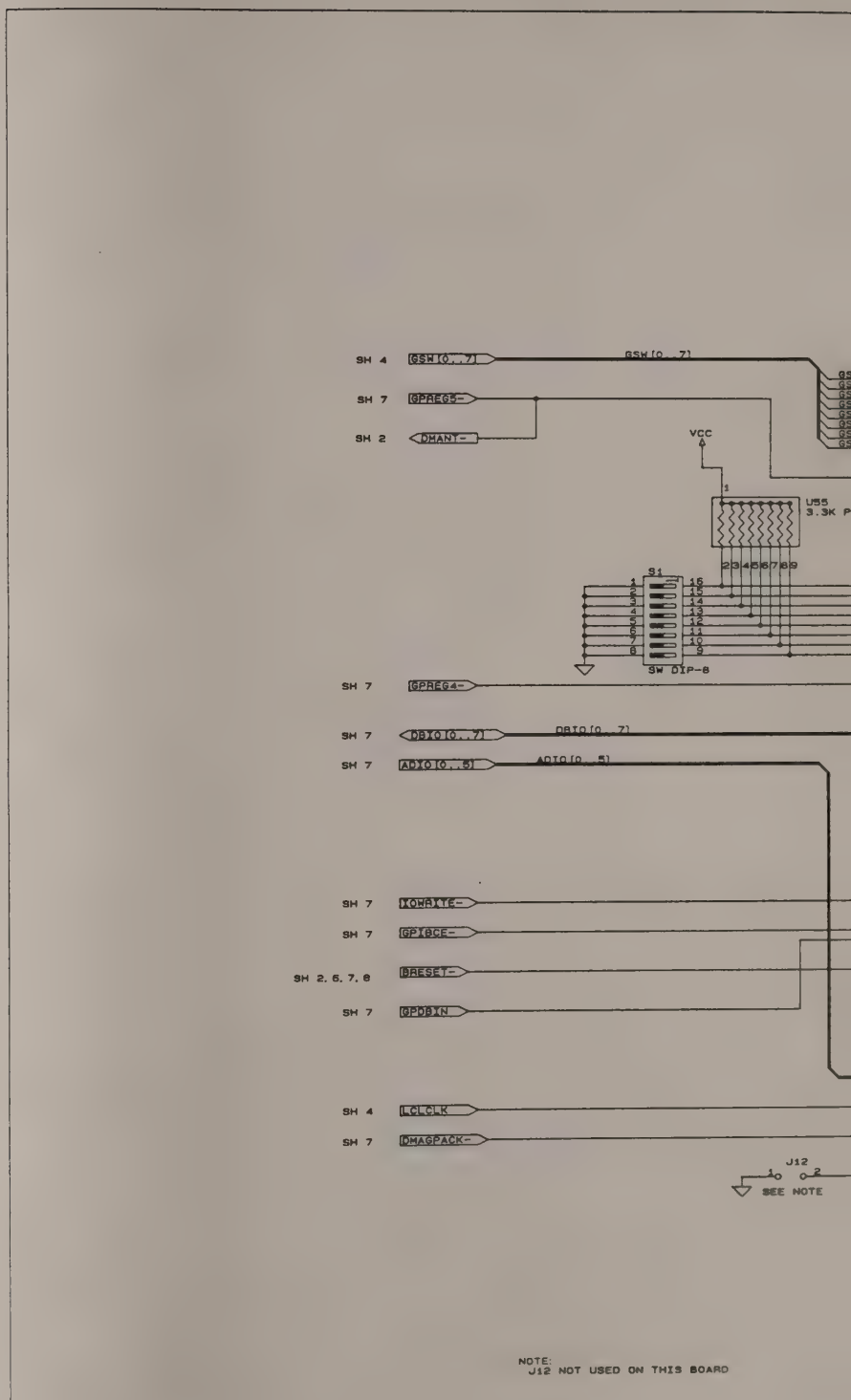

NOTE:
J12 NOT USED ON THIS BOARD

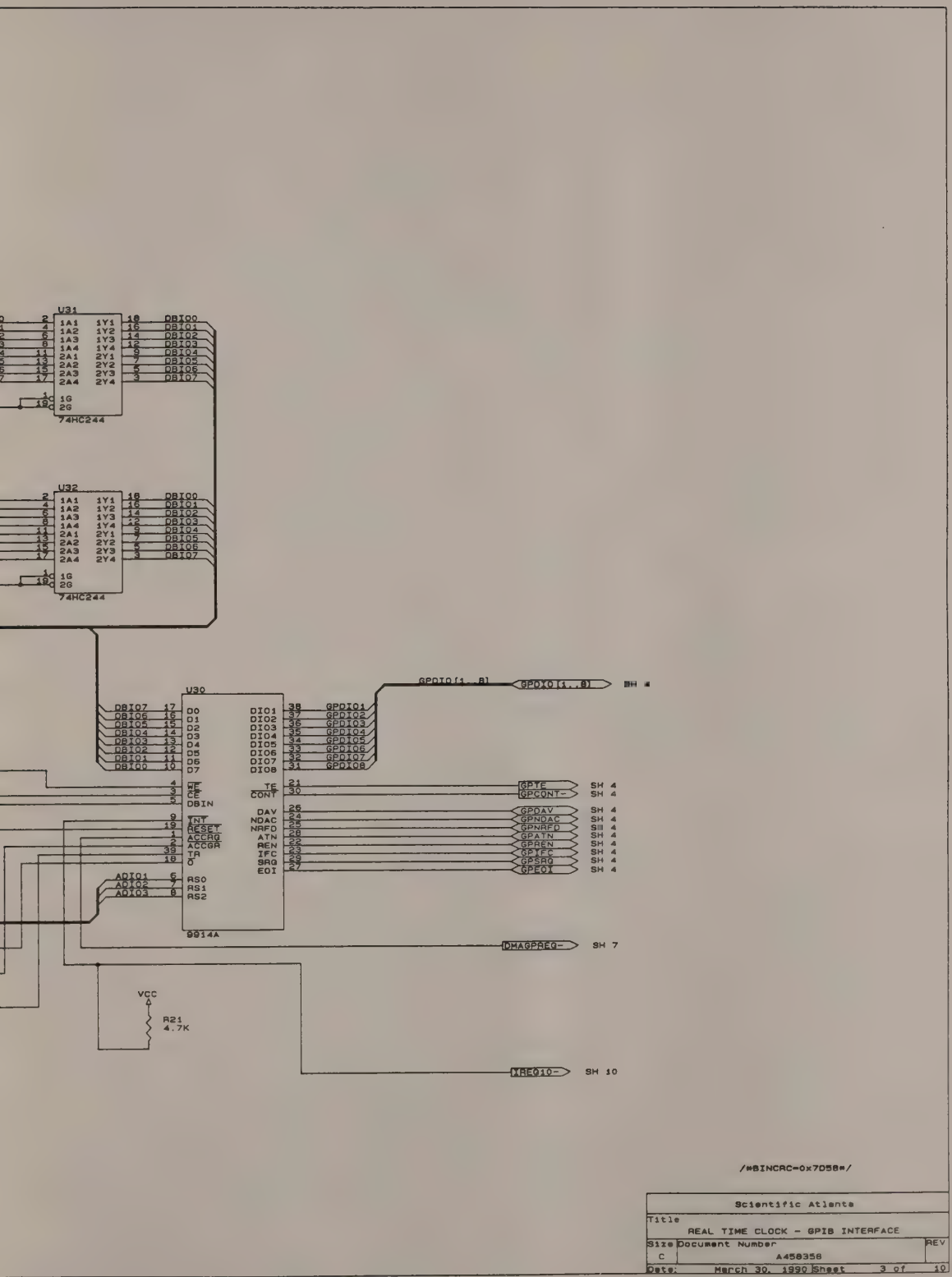
U31
74HC244
U32
74HC244
U30
9914A
GPDIO[1..8]
GPDIO[1..8]
GPTE
GPCONT-
GPDAV
GPNDAC
GPNRFD
GPATN
GPREN
GPIFC
GPSRQ
GPEOI
DMAGPREQ-
IREQ10-
VCC
R21
4.7K
/*BINCRC=0x7D58*/
Scientific Atlanta
Title
REAL TIME CLOCK - GPIB INTERFACE
Size
C
Document Number
A458358
REV
Date: March 30, 1990 Sheet 3 of 10

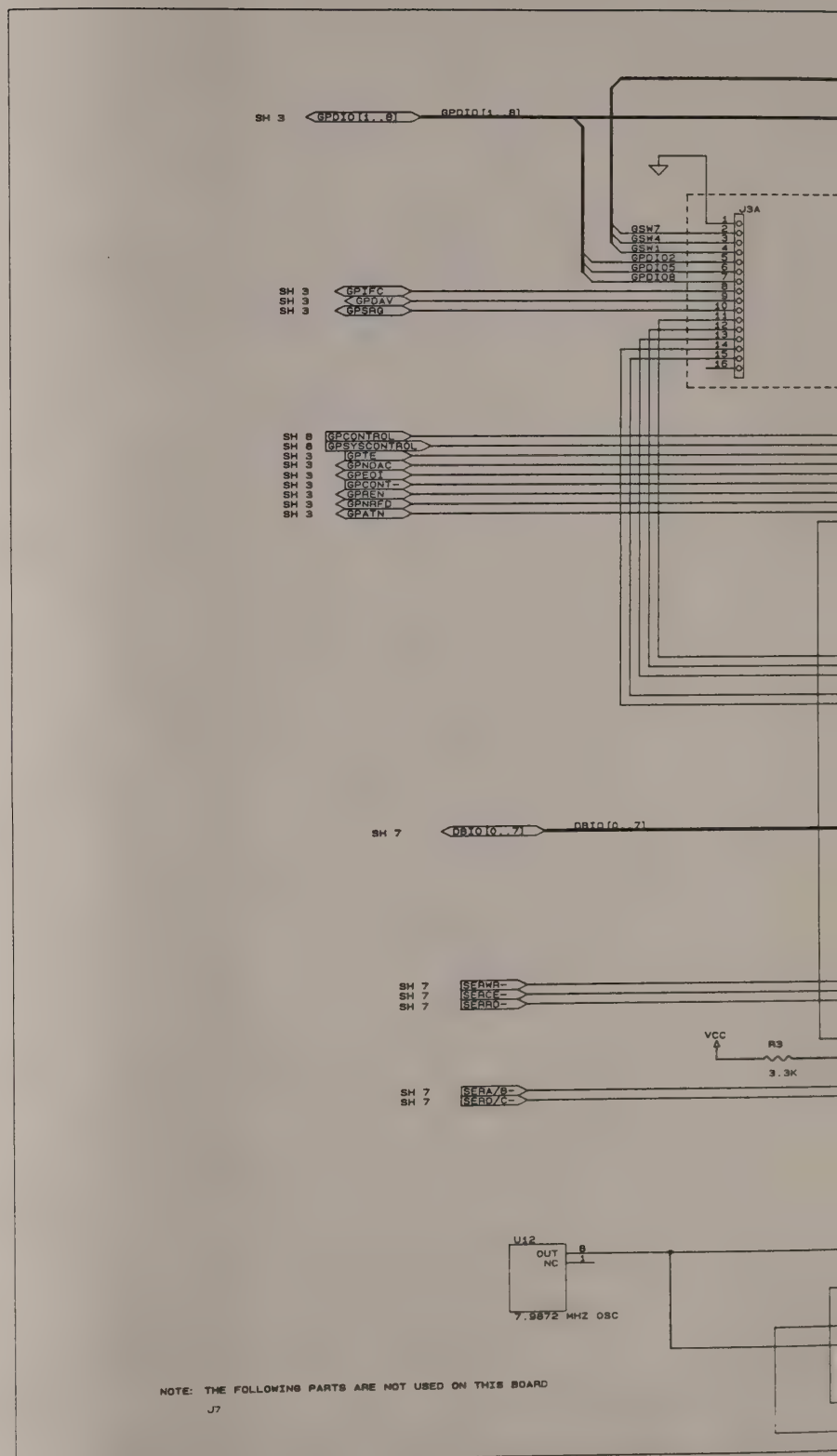
SH 3
GPDIO[1..8]
GPDIO[1..8]
J3A
GSW7
GSW4
GSW1
GPDIO2
GPDIO5
GPDIO8
SH 3
GPYFC
SH 3
GPDAV
SH 3
GPSRQ
SH 8
GPCONTROL
SH 8
GPSYSCONTROL
SH 3
GPTE
SH 3
GPNOAC
SH 3
GPEOI
SH 3
GPCONT-
SH 3
GPREN
SH 3
GPNRFD
SH 3
GPATN
SH 7
DBIO[0..7]
DBIO[0..7]
SH 7
SEAWR-
SH 7
SEACS-
SH 7
SEARD-
VCC
R3
3.3K
SH 7
SERA/B-
SH 7
SERD/C-
U12
OUT
NC
8
1
7.9872 MHZ OSC
NOTE: THE FOLLOWING PARTS ARE NOT USED ON THIS BOARD
J7

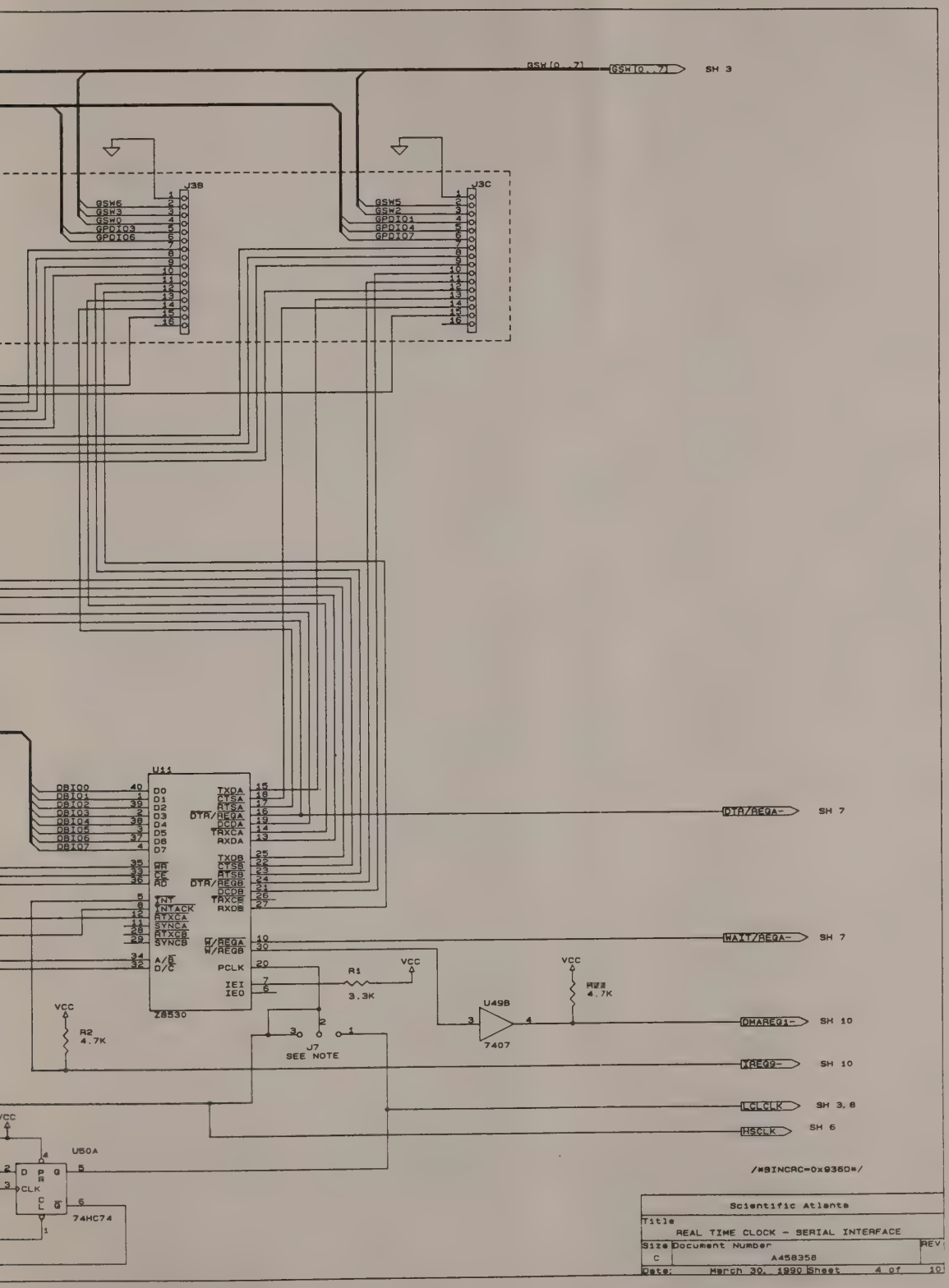
GSW[0..7]
SH 3
J3B
J3C
GSW6
GSW3
GSW0
GPDIO3
GPDIO6
GSW5
GSW2
GPDIO1
GPDIO4
GPDIO7
U11
Z8530
DBIO0
DBIO1
DBIO2
DBIO3
DBIO4
DBIO5
DBIO6
DBIO7
DTR/REQA-
SH 7
WAIT/REQA-
SH 7
R1
3.3K
R2
4.7K
VCC
U49B
7407
DMAREQ1-
SH 10
XREQ9-
SH 10
J7
SEE NOTE
LCLCLK
SH 3, 8
HSCLK
SH 6
U50A
74HC74
/*BINCAC=0x9360*/
Scientific Atlanta
REAL TIME CLOCK - SERIAL INTERFACE
A458358
March 30, 1990
4 of 10

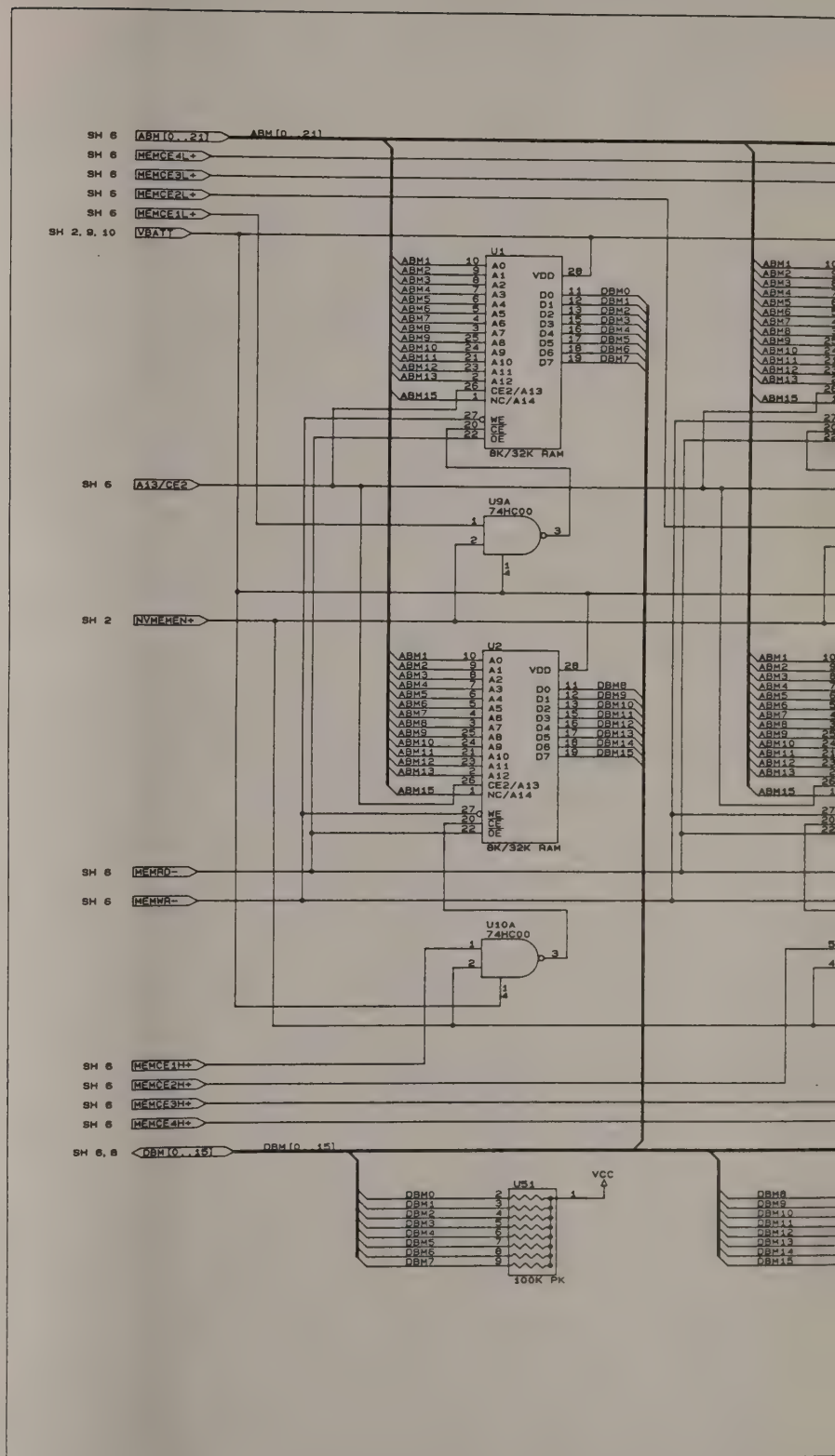
SH 6
ABM[0..21]
MEMCE4L+
MEMCE3L+
MEMCE2L+
MEMCE1L+
SH 2, 9, 10
VBATT
U1
8K/32K RAM
SH 6
A13/CE2
U9A
74HC00
SH 2
NVMEMEN+
U2
8K/32K RAM
SH 6
MEMRD-
SH 6
MEMWR-
U10A
74HC00
SH 6
MEMCE1H+
SH 6
MEMCE2H+
SH 6
MEMCE3H+
SH 6
MEMCE4H+
SH 6, 8
DBM[0..15]
VCC
U51
100K PK

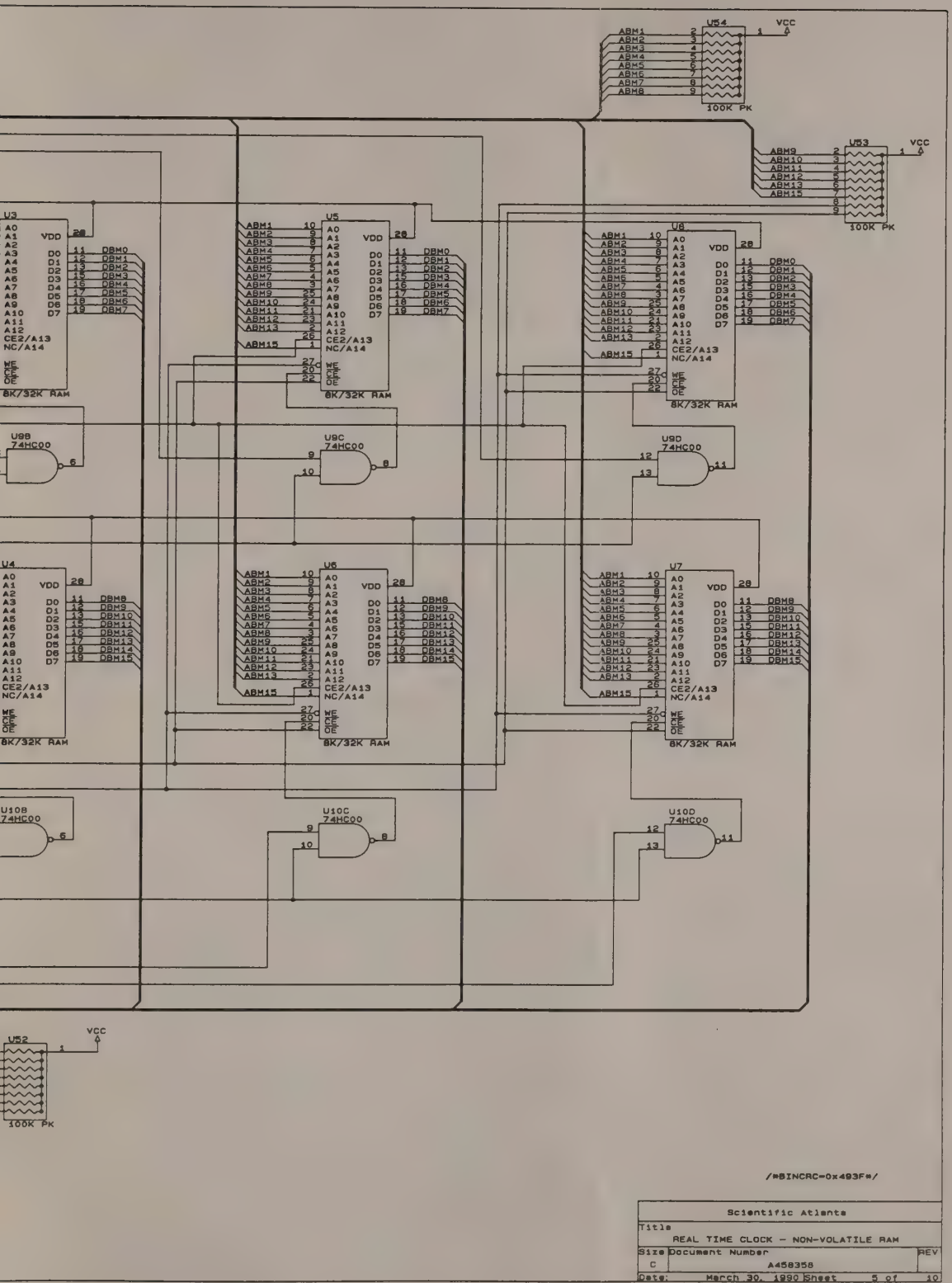
U54
VCC
100K PK
U53
VCC
100K PK
U3
U5
U8
U4
U6
U7
8K/32K RAM
U9B
U9C
U9D
74HC00
U10B
U10C
U10D
U52
VCC
100K PK
/*BINCRC=0x493F*/
Scientific Atlanta
Title
REAL TIME CLOCK - NON-VOLATILE RAM
Size
C
Document Number
A458358
REV
Date: March 30, 1990 Sheet 5 of 10

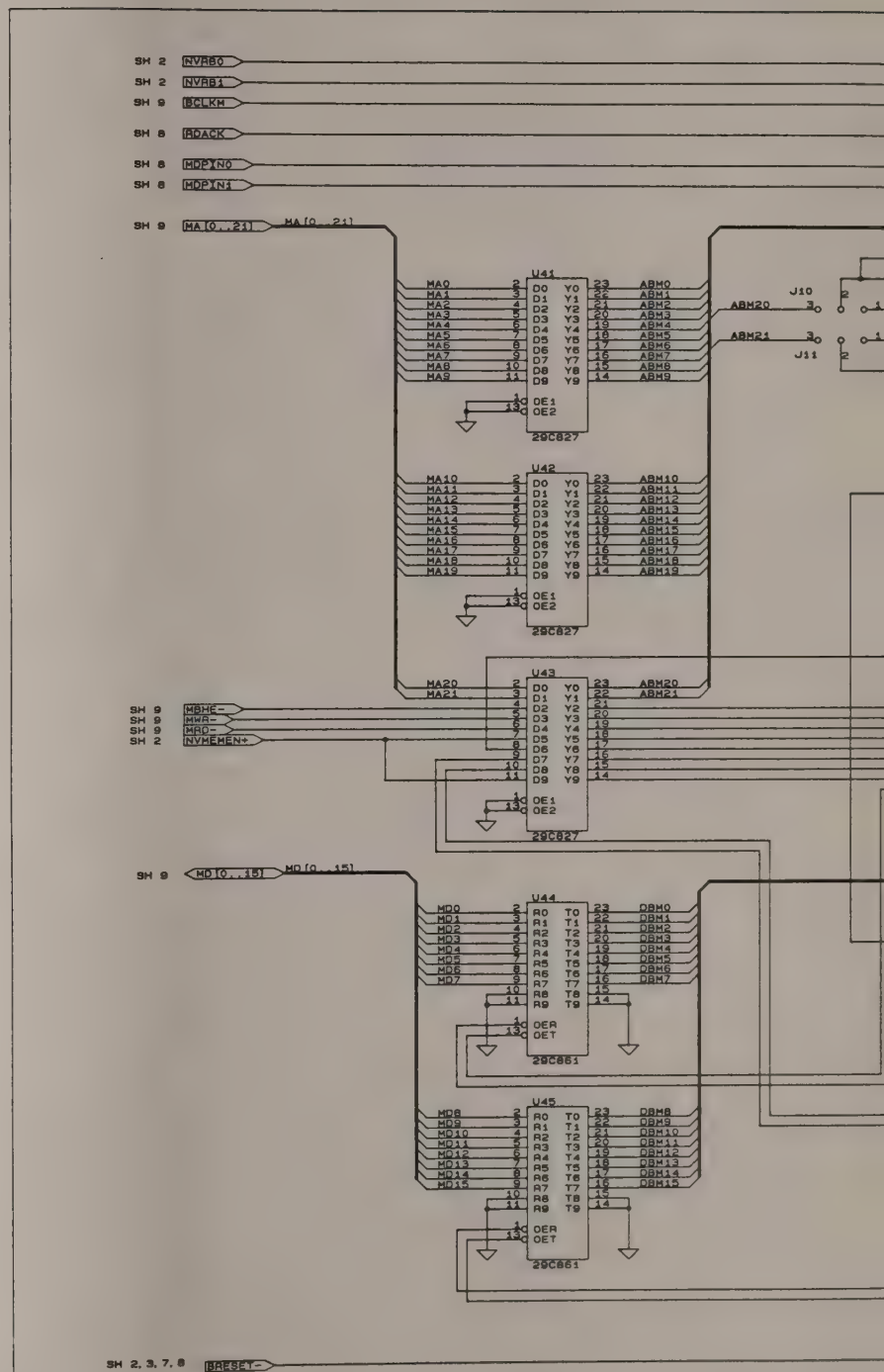

NOTE: THE FOLLOWING PARTS ARE NOT USED ON THIS BOARD

J10, J11

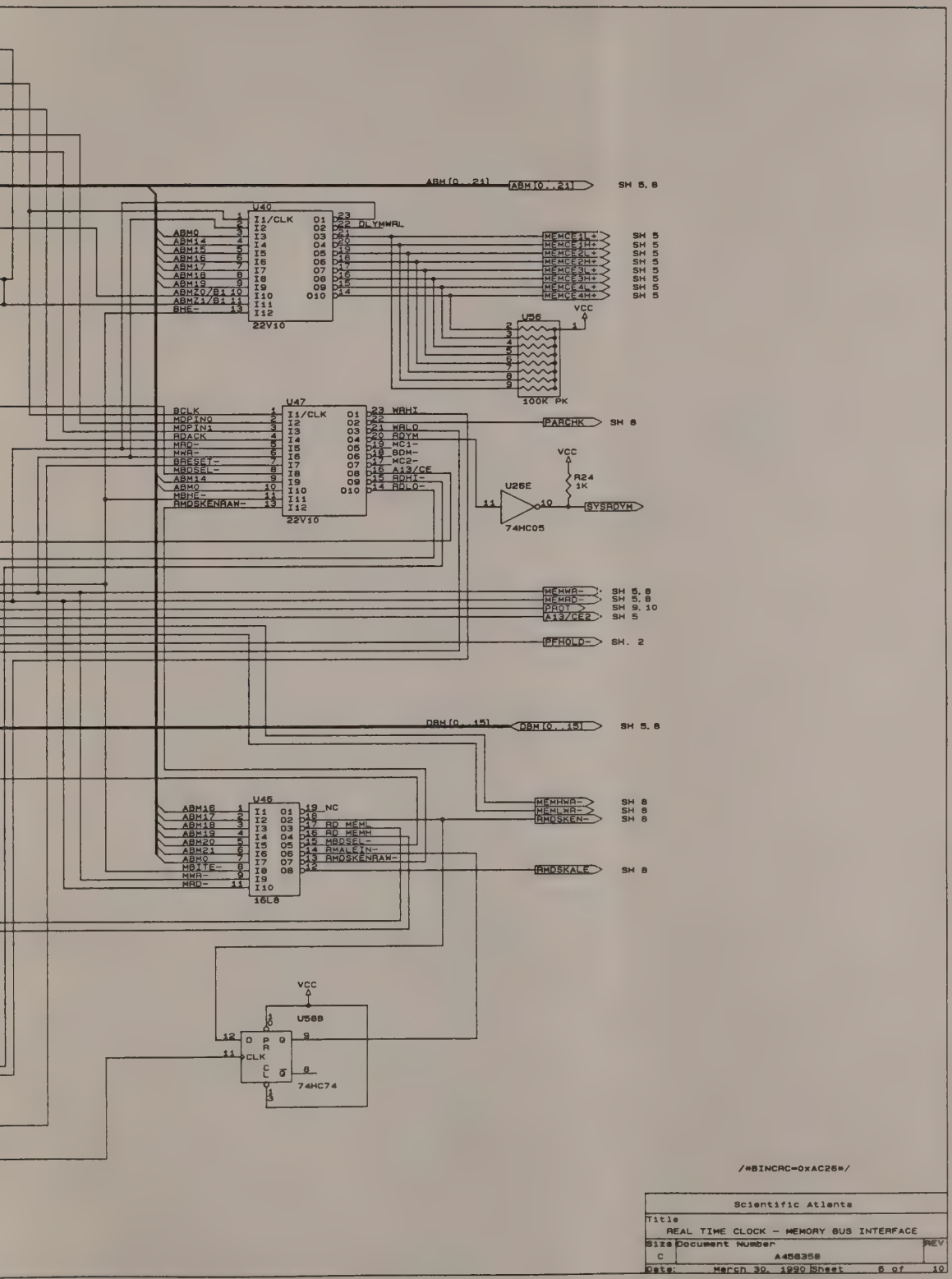
ABM[0..21]
ABM[0..21]
SH 5, 8
U40
I1/CLK
I2
I3
I4
I5
I6
I7
I8
I9
I10
I11
I12
O1
O2
O3
O4
O5
O6
O7
O8
O9
O10
22V10
ABM0
ABM14
ABM15
ABM16
ABM17
ABM18
ABM19
ABM20/B1
ABM21/B1
BHE-
DLYMWRL
MEMCE1L+
MEMCE1M+
MEMCE2L+
MEMCE2M+
MEMCE3L+
MEMCE3M+
MEMCE4L+
MEMCE4M+
SH 5
U56
VCC
100K PK
U47
BCLK
MDPIN0
MDPIN1
RDACK
MRD-
MWR-
BRESET-
MBDSEL-
ABM14
ABM0
MBHE-
AMDSKENAW-
WRHI
WRLO
RDYM
MC1-
BDM-
MC2-
A13/CE
ADHI-
ADLO-
PARCHK
SH 8
R24
1K
U26E
74HC05
SYSRDYH
MEMWR-
MEMRD-
PROT
A13/CE2
SH 5, 8
SH 9, 10
SH 5
PEHOLD-
SH. 2
DBM[0..15]
DBM[0..15]
SH 5, 8
U46
ABM16
ABM17
ABM18
ABM19
ABM20
ABM21
ABM0
MBITE-
MWR-
MRD-
NC
RD_MEML
RD_MEMM
MBDSEL-
AMALEIN-
AMDSKENRAW-
16L8
MEMHWR-
MEMLWR-
AMDSKEN-
AMDSKALE
SH 8
VCC
U58B
D
CLK
PR
CL
Q
74HC74
/*$INCRC=0xAC26*/
Scientific Atlanta
Title
REAL TIME CLOCK - MEMORY BUS INTERFACE
Size
C
Document Number
A456358
REV
Date: March 30, 1990 Sheet 6 of 10

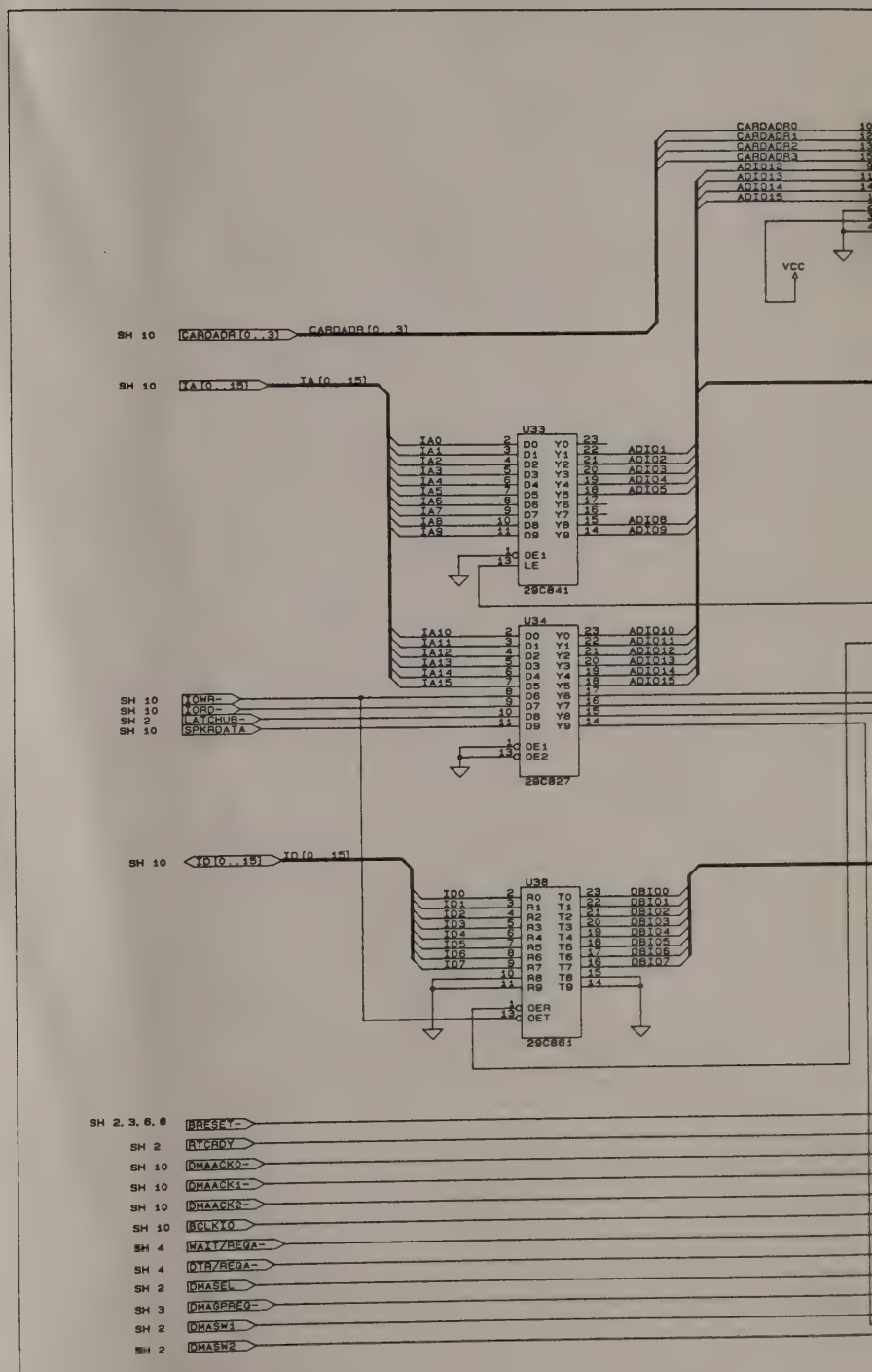
CARDADR0
CARDADR1
CARDADR2
CARDADR3
ADIO12
ADIO13
ADIO14
ADIO15
VCC
SH 10
CARDADR[0..3]
CARDADR[0..3]
SH 10
XA[0..15]
XA[0..15]
U33
IA0
IA1
IA2
IA3
IA4
IA5
IA6
IA7
IA8
IA9
D0
D1
D2
D3
D4
D5
D6
D7
D8
D9
Y0
Y1
Y2
Y3
Y4
Y5
Y6
Y7
Y8
Y9
ADIO1
ADIO2
ADIO3
ADIO4
ADIO5
ADIO6
ADIO9
OE1
LE
29C841
U34
IA10
IA11
IA12
IA13
IA14
IA15
ADIO10
ADIO11
ADIO12
ADIO13
ADIO14
ADIO15
SH 10
XOWR-
SH 10
XORD-
SH 2
LATCHWR-
SH 10
SPKRDATA
OE1
OE2
29C827
SH 10
XD[0..15]
XD[0..15]
U38
XD0
XD1
XD2
XD3
XD4
XD5
XD6
XD7
A0
A1
A2
A3
A4
A5
A6
A7
A8
A9
T0
T1
T2
T3
T4
T5
T6
T7
T8
T9
DBIO0
DBIO1
DBIO2
DBIO3
DBIO4
DBIO5
DBIO6
DBIO7
OER
OET
29C861
SH 2, 3, 6, 8
BRESET-
SH 2
AYCADY
SH 10
DMAACK0-
SH 10
DMAACK1-
SH 10
DMAACK2-
SH 10
BCLKIO
SH 4
WAIT/REQA-
SH 4
DTR/REQA-
SH 2
DMASEL
SH 3
DMAGPREQ-
SH 2
DMASW1
SH 2
DMASW2

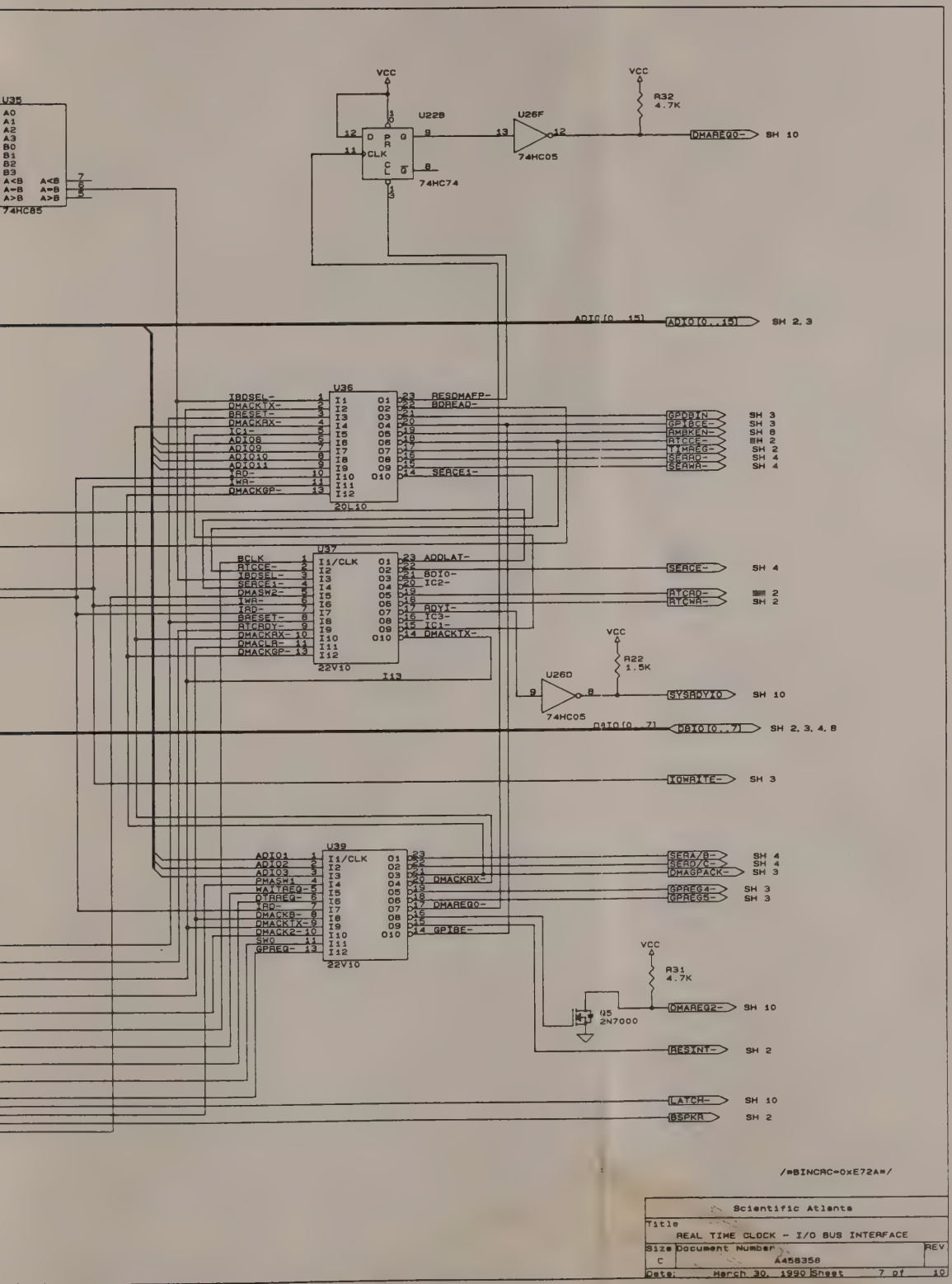
U35
74HC85
VCC
U22B
74HC74
U26F
74HC05
R32
4.7K
DMAREQ0-
SH 10
ADIO[0..15]
SH 2, 3
U36
20L10
RESDMAFP-
BDREAD-
GPDBIN
GPIBCE-
AMBKEN-
RTCCE-
TIMREG-
SERAD-
SERWR-
SERCE1-
SH 3
SH 6
SH 2
SH 4
U37
22V10
I13
ADDLAT-
BDIO-
IC2-
ADYI-
IC3-
IC1-
DMACKTX-
SERCE-
RTCRD-
RTCWR-
R22
1.5K
U26D
74HC05
SYSADYIO
DBIO[0..7]
SH 2, 3, 4, 8
IOWRITE-
U39
22V10
DMACKRX-
DMAREQ0-
GPIBE-
SERA/B-
SERD/C-
DMAGPACK-
GPREG4-
GPREG5-
R31
4.7K
Q5
2N7000
DMAREQ2-
RESINT-
LATCH-
BSPKR
/*BINCRC=0xE72A*/
Scientific Atlanta
REAL TIME CLOCK - I/O BUS INTERFACE
Size C
Document Number A458358
REV
Date: March 30, 1990 Sheet 7 of 10

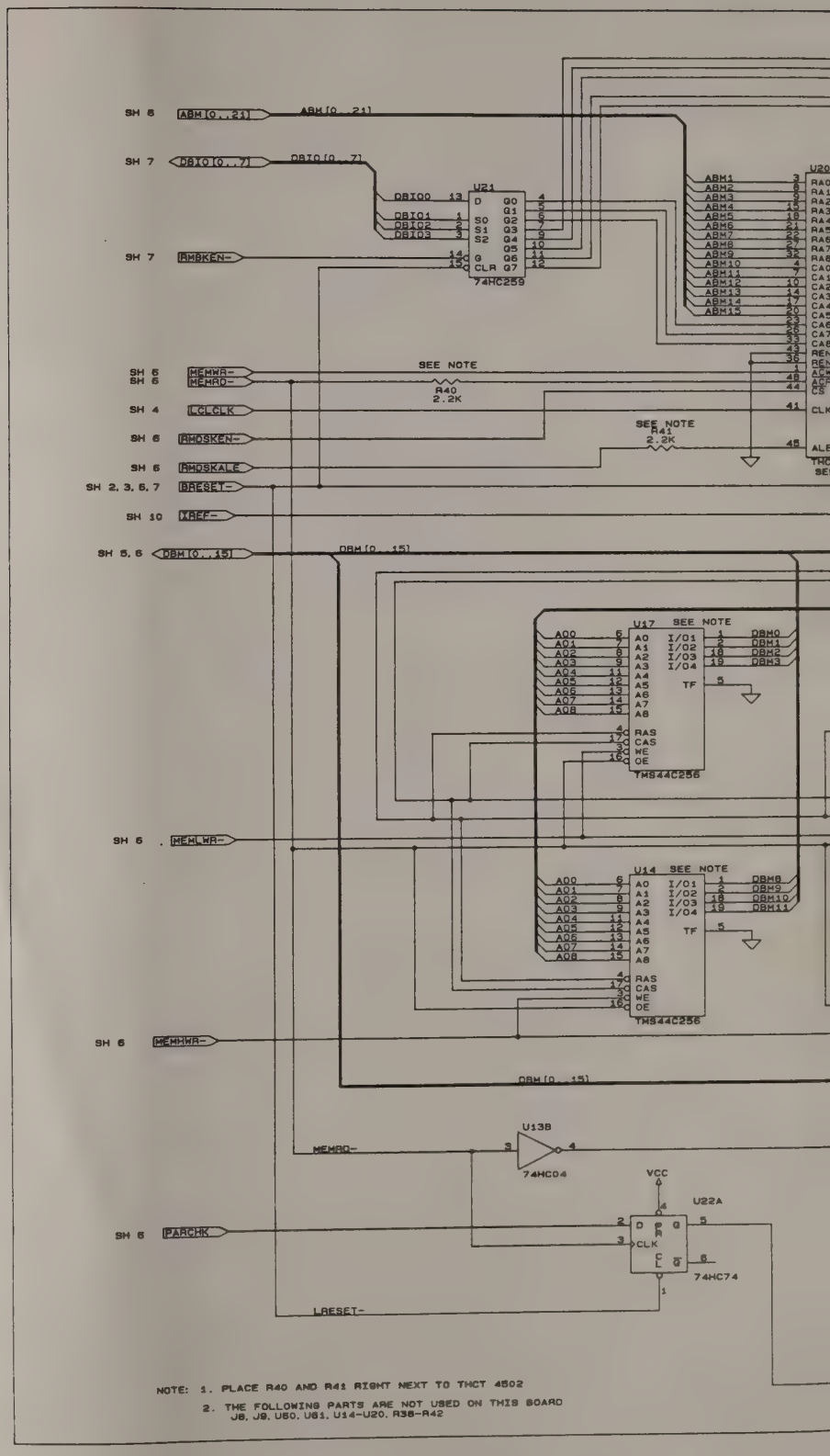
SH 6 ABM[0..21]
SH 7 DBIO[0..7]
SH 7 AMBKEN-
SH 6 MEMWR-
SH 6 MEMRD-
SH 4 LCLCLK
SH 6 AMDSKEN-
SH 6 AMDSKALE
SH 2, 3, 6, 7 RRESET-
SH 10 XREF-
SH 5, 6 DBM[0..15]
SH 6 MEMLWR-
SH 6 MEMMWR-
SH 6 PARCHK
U21
74HC259
SEE NOTE
R40
2.2K
R41
2.2K
U17
U14
TMS44C256
U13B
74HC04
U22A
74HC74
VCC
MEMRD-
LRESET-
NOTE: 1. PLACE R40 AND R41 RIGHT NEXT TO THCT 4502
2. THE FOLLOWING PARTS ARE NOT USED ON THIS BOARD
J8, J9, U50, U61, U14-U20, R38-R42

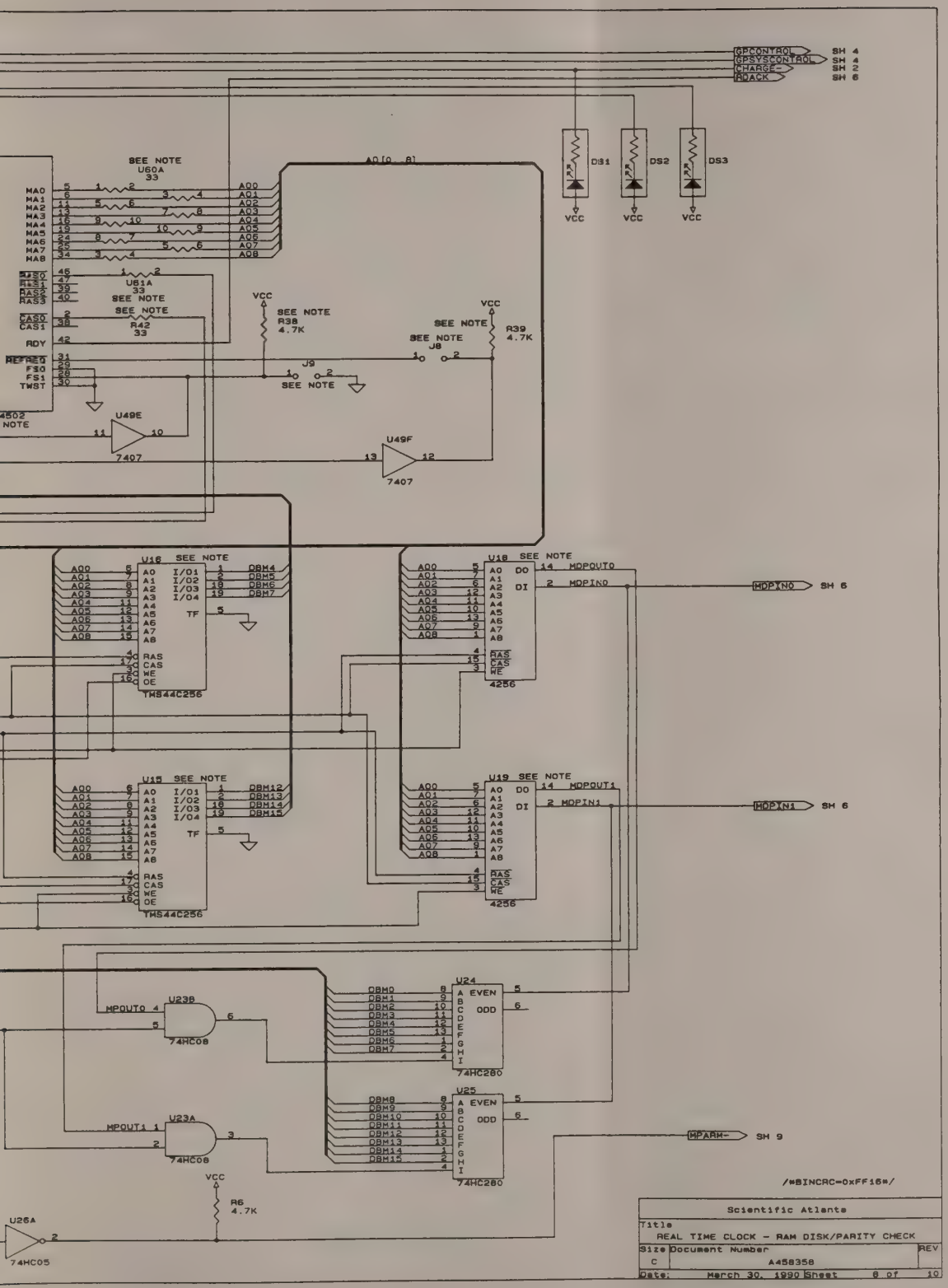
GPCONTROL
GPSYSCONTROL
CHARGE-
ADACK
SH 4
SH 4
SH 2
SH 6
DS1
DS2
DS3
VCC
SEE NOTE
U60A
33
A0[0..8]
MA0
MA1
MA2
MA3
MA4
MA5
MA6
MA7
MA8
A00
A01
A02
A03
A04
A05
A06
A07
A08
U61A
RAS0
RAS1
RAS2
RAS3
CAS0
CAS1
RDY
REFREQ
FS0
FS1
TWST
R42
R38
4.7K
R39
4.7K
J8
J9
U49E
U49F
7407
U16
U15
TMS44C256
DBM4
DBM5
DBM6
DBM7
DBM12
DBM13
DBM14
DBM15
TF
RAS
CAS
WE
OE
U18
U19
MDPOUT0
MDPOUT1
MDPIN0
MDPIN1
4256
SH 6
SH 6
U23B
U23A
74HC08
MPOUT0
MPOUT1
U24
U25
74HC280
EVEN
ODD
MPARM-
SH 9
/*BINCRC=0xFF16*/
R6
4.7K
U26A
74HC05
Scientific Atlanta
REAL TIME CLOCK - RAM DISK/PARITY CHECK
Size
C
Document Number
A458358
REV
Date: March 30, 1990 Sheet 8 of 10

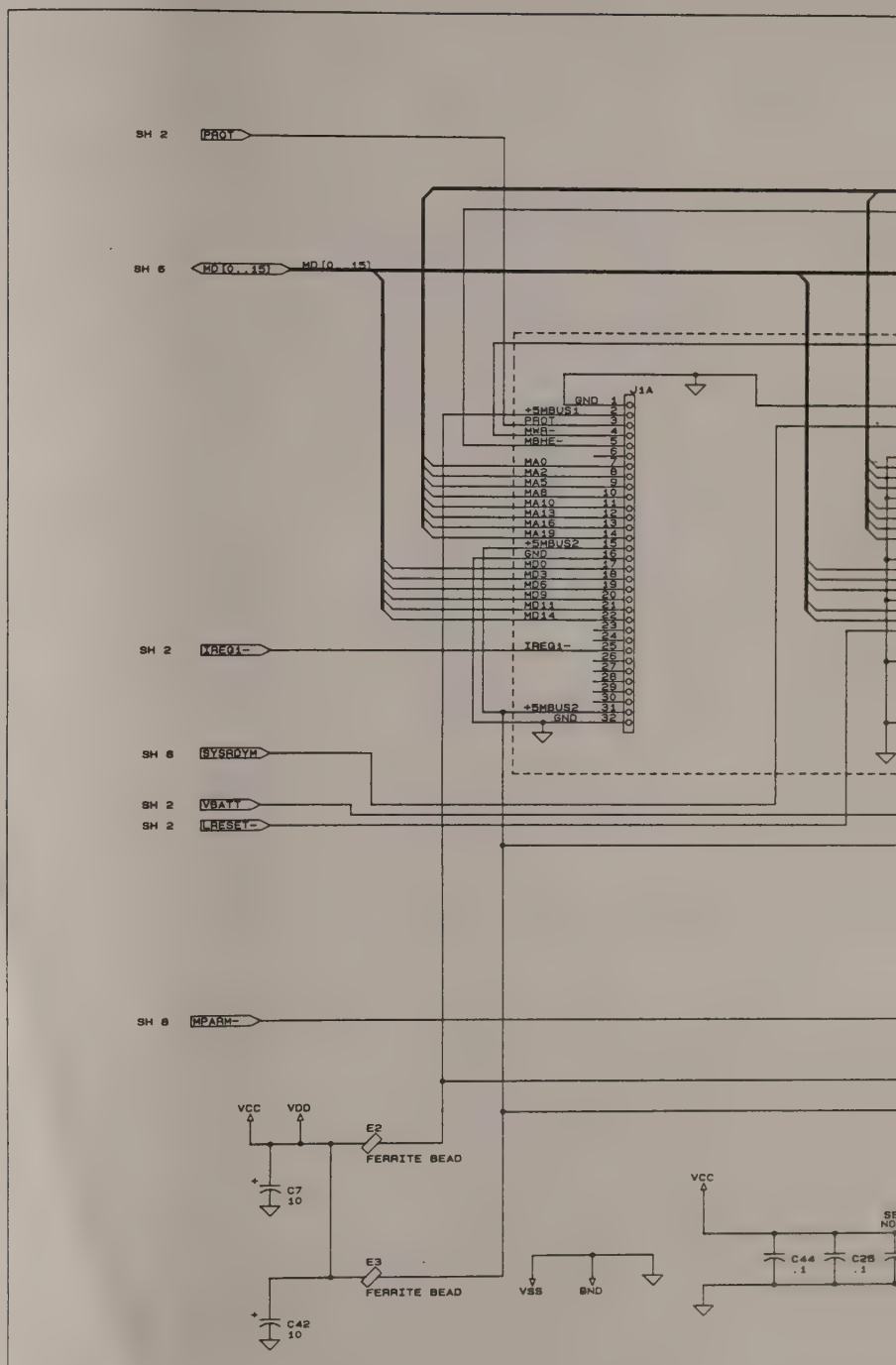

NOTE:
THE FOLLOWING PARTS ARE NOT INSTALLED:
C18-C24, C26

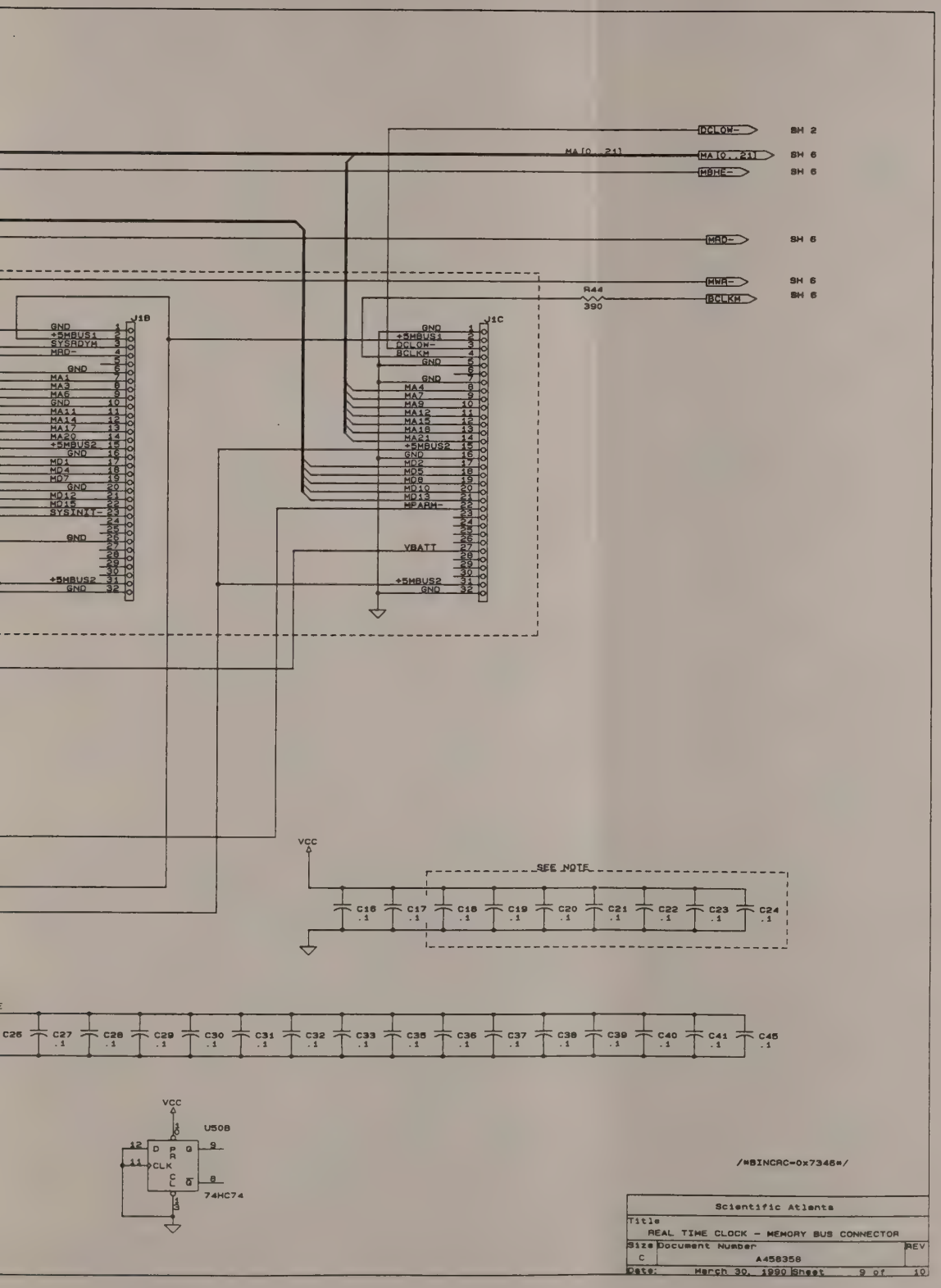
DCLOW-
SH 2
MA10..21
MA10..21
SH 6
MBHE-
SH 6
MAD-
SH 6
MWR-
SH 6
R44
390
BCLKM
SH 6
J1B
J1C
GND
+5MBUS1
SYSRDYH
MAD-
MA1
MA3
MA6
MA11
MA14
MA17
MA20
+5MBUS2
MD1
MD4
MD7
MD12
MD15
SYSINIT-
MA4
MA7
MA9
MA12
MA15
MA18
MA21
MD2
MD5
MD8
MD10
MD13
MPARM-
VBATT
VCC
SEE NOTE
C16 .1
C17 .1
C18 .1
C19 .1
C20 .1
C21 .1
C22 .1
C23 .1
C24 .1
C25 .1
C26 .1
C27 .1
C28 .1
C29 .1
C30 .1
C31 .1
C32 .1
C33 .1
C35 .1
C36 .1
C37 .1
C38 .1
C39 .1
C40 .1
C41 .1
C45 .1
U50B
74HC74
/*BINCRC=0x7346*/
Scientific Atlanta
Title
REAL TIME CLOCK - MEMORY BUS CONNECTOR
Size
C
Document Number
A458358
REV
Date: March 30, 1990 Sheet 9 of 10

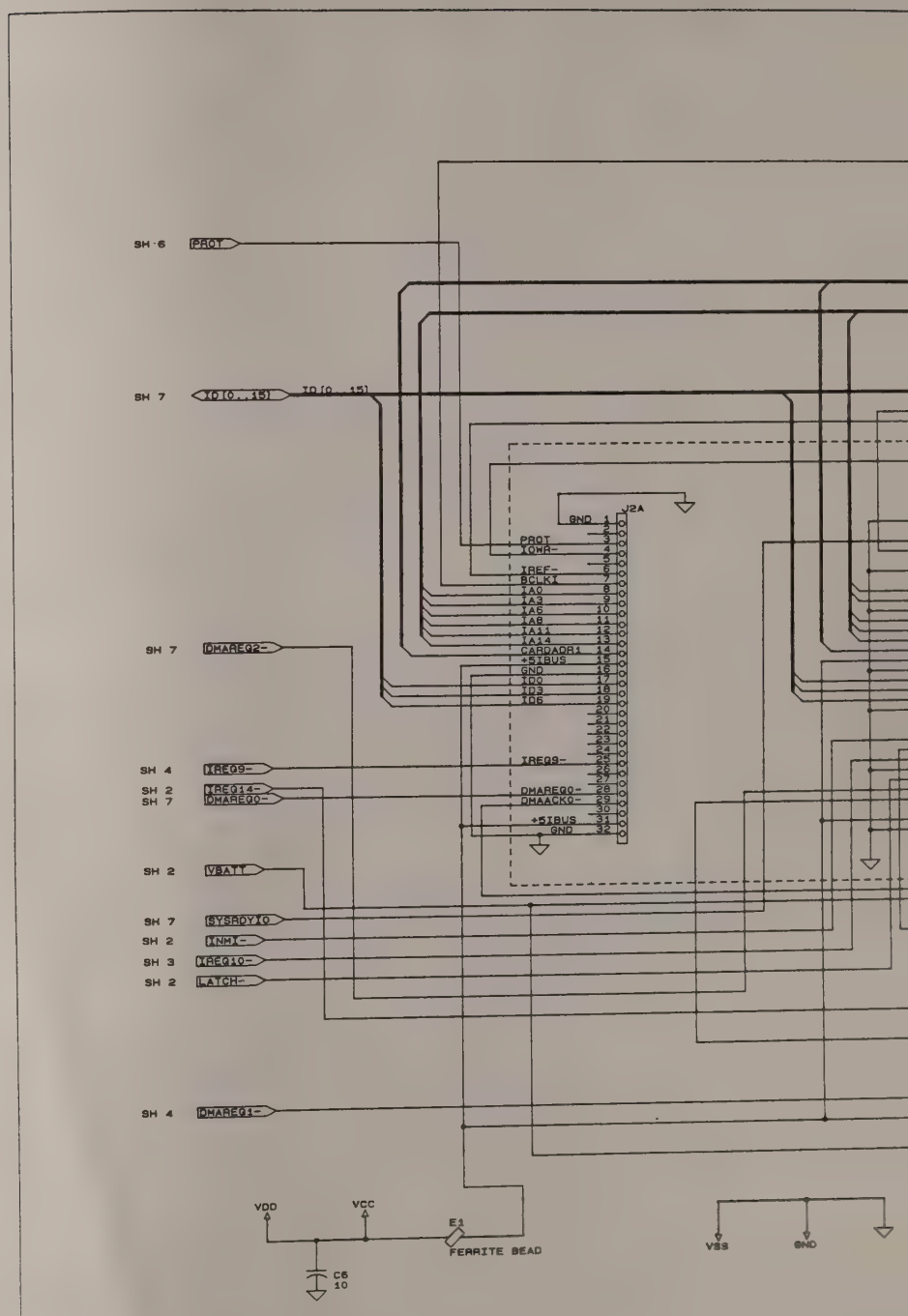
SH 6
PROT
SH 7
IO[0..15]
J2A
GND 1
2
PROT 3
IOWR- 4
5
IREF- 6
BCLK1 7
IA0 8
IA3 9
IA5 10
IA8 11
IA11 12
IA14 13
CARDADR1 14
+5IBUS 15
GND 16
IO9 17
IO3 18
IO6 19
20
21
22
23
24
IREQ9- 25
26
27
DMAREQ0- 28
DMAACK0- 29
30
+5IBUS 31
GND 32
SH 7
DMAREQ2-
SH 4
IREQ9-
SH 2
IREQ14-
SH 7
DMAREQ0-
SH 2
VBATT
SH 7
SYSRDY10
SH 2
XNMI-
SH 3
IREQ10-
SH 2
LATCH-
SH 4
DMAREQ1-
VDD
VCC
E1
FERRITE BEAD
C6
10
VSS
GND

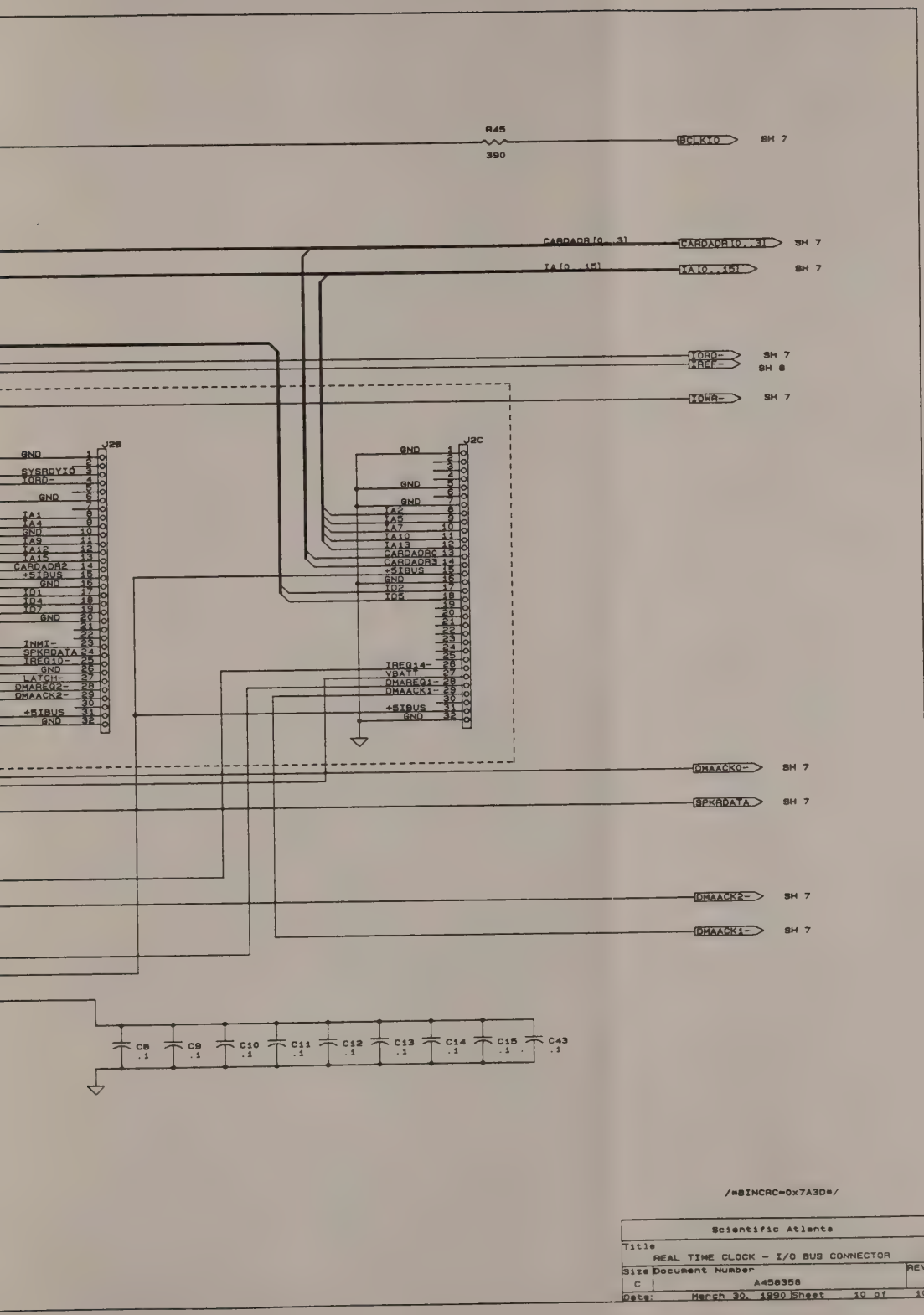
R45
390
BCLKIO
SH 7
CARDADR[0..3]
CARDADR[0..3]
SH 7
IA[0..15]
IA[0..15]
SH 7
IORD-
IOWR-
SH 7
SH 8
IOWR-
SH 7
V2B
V2C
GND
SYSRDYIO
IORD-
IA1
IA4
IA9
IA12
IA15
CARDADR2
+5IBUS
IO1
IO4
IO7
INMI-
SPKRDATA
IREQ10-
LATCH-
DMAREQ2-
DMAACK2-
+5IBUS
IA2
IA5
IA7
IA10
IA13
CARDADR0
CARDADR3
IO2
IO5
IREQ14-
VBAT
DMAREQ1-
DMAACK1-
DMAACK0-
SH 7
SPKRDATA
SH 7
DMAACK2-
SH 7
DMAACK1-
SH 7
C8 .1
C9 .1
C10 .1
C11 .1
C12 .1
C13 .1
C14 .1
C15 .1
C43 .1
/*BINCRC=0x7A3D*/
Scientific Atlanta
Title
REAL TIME CLOCK - I/O BUS CONNECTOR
Size C
Document Number A458358
REV
Date: March 30, 1990 Sheet 10 of 10

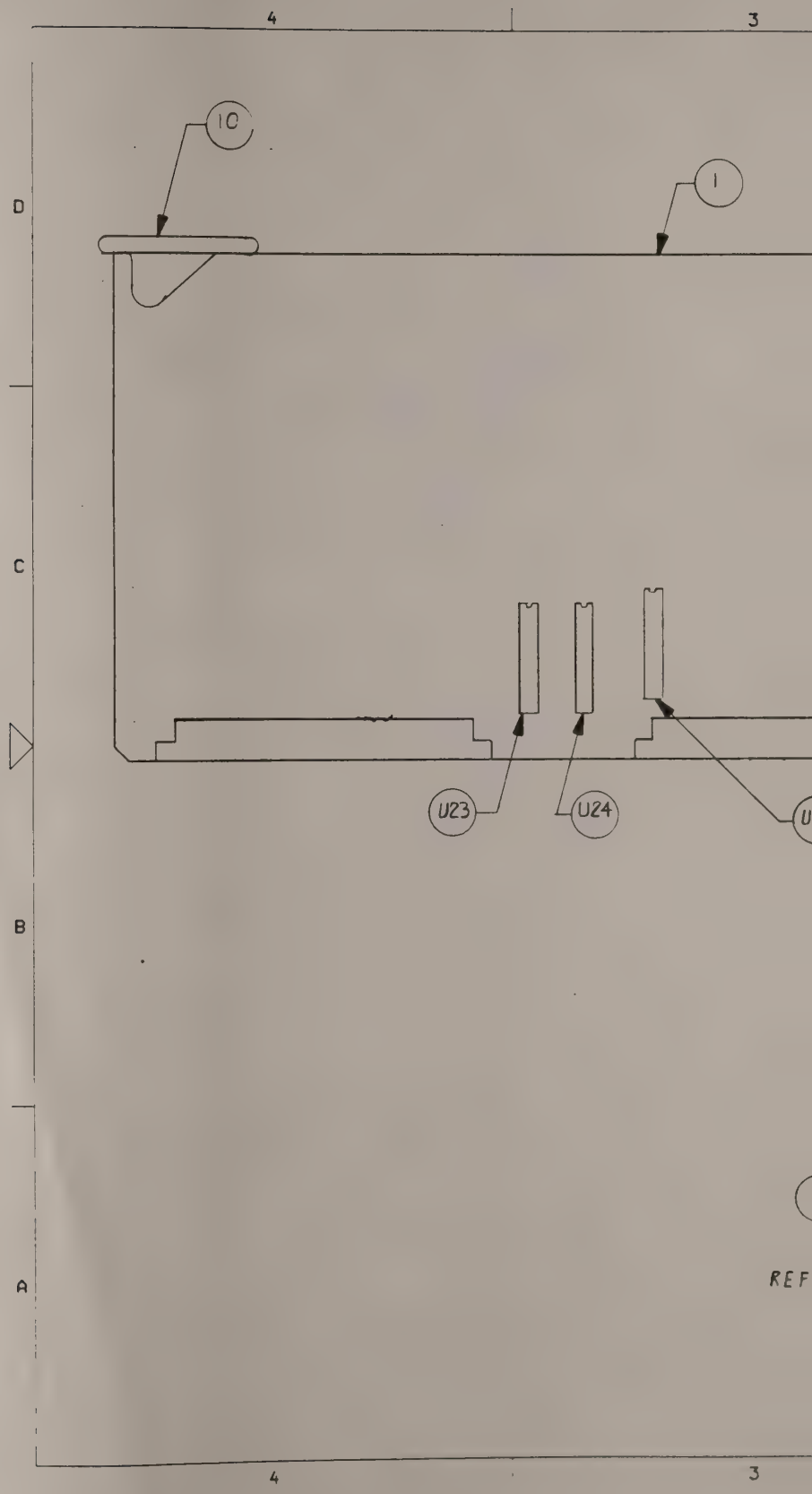
4
3
D
C
B
A
10
1
U23
U24
REF
4
3

APPLICATION		
QTY	NEXT ASSY	USED ON
1	306200	AT9000

REV	DESCRIPTION	APPROVAL	DATE
A	ECO 10759		10-5-87
B	ECO 10735-97, 10871-872		11-17-87
C	ECO 10946		2-8-88
D	ECO 11003		7-10-89
E	ECO 11351, 11365, 12905, 13508		5/97

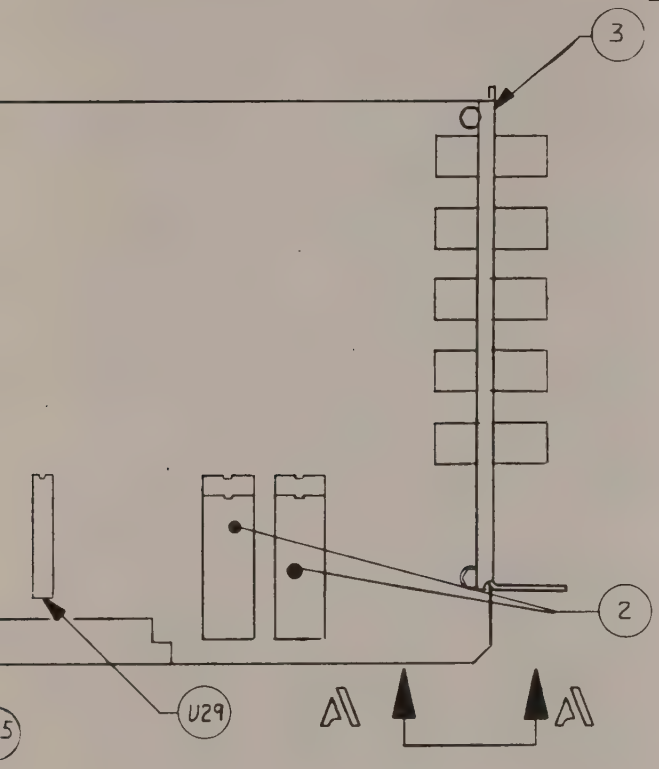

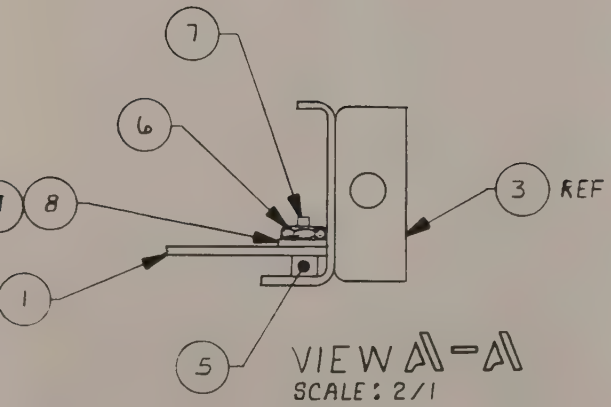

VIEW A-A
SCALE: 2/1

SEE SEPARATE PARTS LIST

DWN	5-23-89	Scientific-Atlanta
ENGR	7/11/89	P.O. BOX 105027 ATLANTA, GA 30348
CHK	7-11-89	2/2 DS3 PWB ASSY
PROD	7-17-89	
APVD	FSCM NO. 10110	SCALE 1/1 DWG. NO. 328078 REV E
SOURCE		SHT 1

EPROM AND PAL CHART

	ECO NO. 10759	ECO NO. 10871-872	ECO NO
TOP ASSY: 328078	328078A	328078B	32
SUB-ASSY: 327980	→	→	→
PWB: 306243 A	→	→	→
U23 - 309225 U23 999A	→	→	→
U24 - 309226 U24 8603	→	→	→
U25 - 309227 U25 D575	→	→	→
U29 - 309228 U29 8AB1	→	→	→
ITEM 2 { U32 - 309229 64F5 U32 / U33 - 309229 88A8 U33	ITEM 2 { U32 - 309268 5FB1 U32 / U33 - 309268 88A8 U33	ITEM 2 { U32 - 457020 6F75 U32 / U33 - 457020 95BC U33	ITEM 2 { U / U
	2.3 VER.	3.0 VER.	

TELEDYNE POST N12187

SA P/N 88063

APPLICATION			REVISIONS				
QTY REQD	NEXT ASSY	USED ON	ZONE	REV	DESCRIPTION	DATE	APPROVED
1	306200	AT9000		E	SEE SHEET 1 FOR REV		[illegible]

10946	ECO NO. 11003	ECO NO. 11351	ECO NO. 11365
078C	328078D	328078E	328078E
→	→	→	→
→	→	→	→
→	→	→	→
→	→	→	→
→	→	→	→
→	→	→	→
2-457045 6479 U32 3-457045 ED20 U33	ITEM 2 { U32-459006 D246 U32 U33-459006 C38C U33	ITEM 2 { U32-458412 B8CC U32 U33-458412 A34F U33	ITEM 2 { U32-458455 B8B6 U32 U33-458455 A34F U33
.0 Mod.	ver. 3.2		

ITEM OR FIND NO.	QTY REQD	S-A STOCK NO.	NOMENCLATURE OR DESCRIPTION	MATL SPEC AND SIZE OR COMPONENT VALUE	IDENTIFYING OR PART NO	FSCM NO

PARTS LIST

UNLESS OTHERWISE SPECIFIED ALL CAPACITORS ARE IN MICROFARADS AND ALL RESISTORS ARE IN OHMS. ±10% AND 1/4 WATT

LAST REFERENCE DESIGNATION USED

C CR J K
Q R S U

ALL DIMENSIONS ARE IN INCHES UNLESS OTHERWISE SPECIFIED

TOLERANCES
3 PLACE DECIMAL ± .005
2 PLACE DECIMAL ± .02
1 PLACE DECIMAL ± .1

FRACTIONS ± ANGLES ±0° 30'

MAX SURFACE ROUGHNESS 125
ALL MACHINED SURFACES EXCEPT AS NOTED

BREAK SHARP EDGES AND CORNERS .010 MAX

FINISH NONE

CONTRACT NO
DWN [signature] 7-7-89
ENGR
CHK
PROD
APVD
APVD

Scientific-Atlanta 3845 Pleasantdale Road Atlanta, Georgia 30340

ASSEMBLY PWB 2X2 DS3

SIZE	FSCM NO.	DWG NO.	REV
C	10110	328078	E

SCALE NONE SHEET 2

DWG NO 328078 SH 2 REV E

NOTES:

1. INSTALL AT NEXT ASSEMBLY U23, U24, U25, U29, U32, U33.

2. PLACE C83 UNDER XU30, C84 UNDER XU31, AND ITEM 2 UNDER U21 BEFORE WAVE SOLDER.

3. C85 - C92 GO ON BACK OF BOARD.

4. INSTALL AFTER WAVE SOLDER U27, U28, U30, U31, U34, W1, U1, U9, W2, W3, U2, U3, U4, U5, U8, U11, U12, U13, U14, U17, AND ITEM 4.

5. ITEMS P1 AND P2 ARE PLACED ON J3 AND J10 ON PINS 1 AND 2

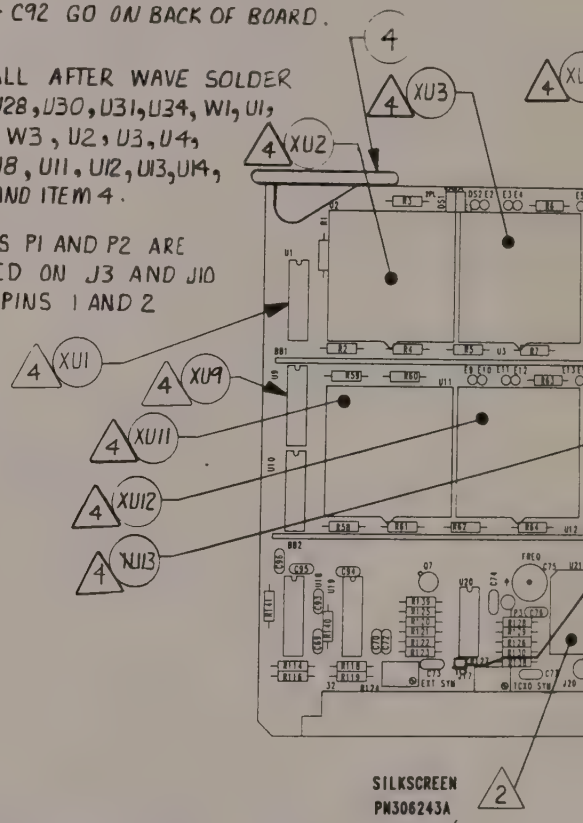

6. INSTALL J2, J4, J9, J11, J13, J17 WITH ONE SPACER (ITEM 5) AS SHOWN PER DETAIL "B". ORIENT AS SHOWN ON DRAWING.

7. INSTALL W1, W2, W3 WITH SIDE EXIT CABLE POSITIONED AS SHOWN.

REV	DESCRIPTION	APPROVAL	DATE
A	ECO 10[illegible]		
B	ECO 10747, 10749	J. M. [illegible]	9/12/89
C	ECO 10801	J. M. [illegible]	10-5-89
D	ECO 10722, 10843	[illegible]	[illegible]
E	ECO 11003	J. M. [illegible]	7/10/90
F	NO ECR 12991, 13020, 13029, 13143, AND 13155.	[illegible]	6/12/9[illegible]

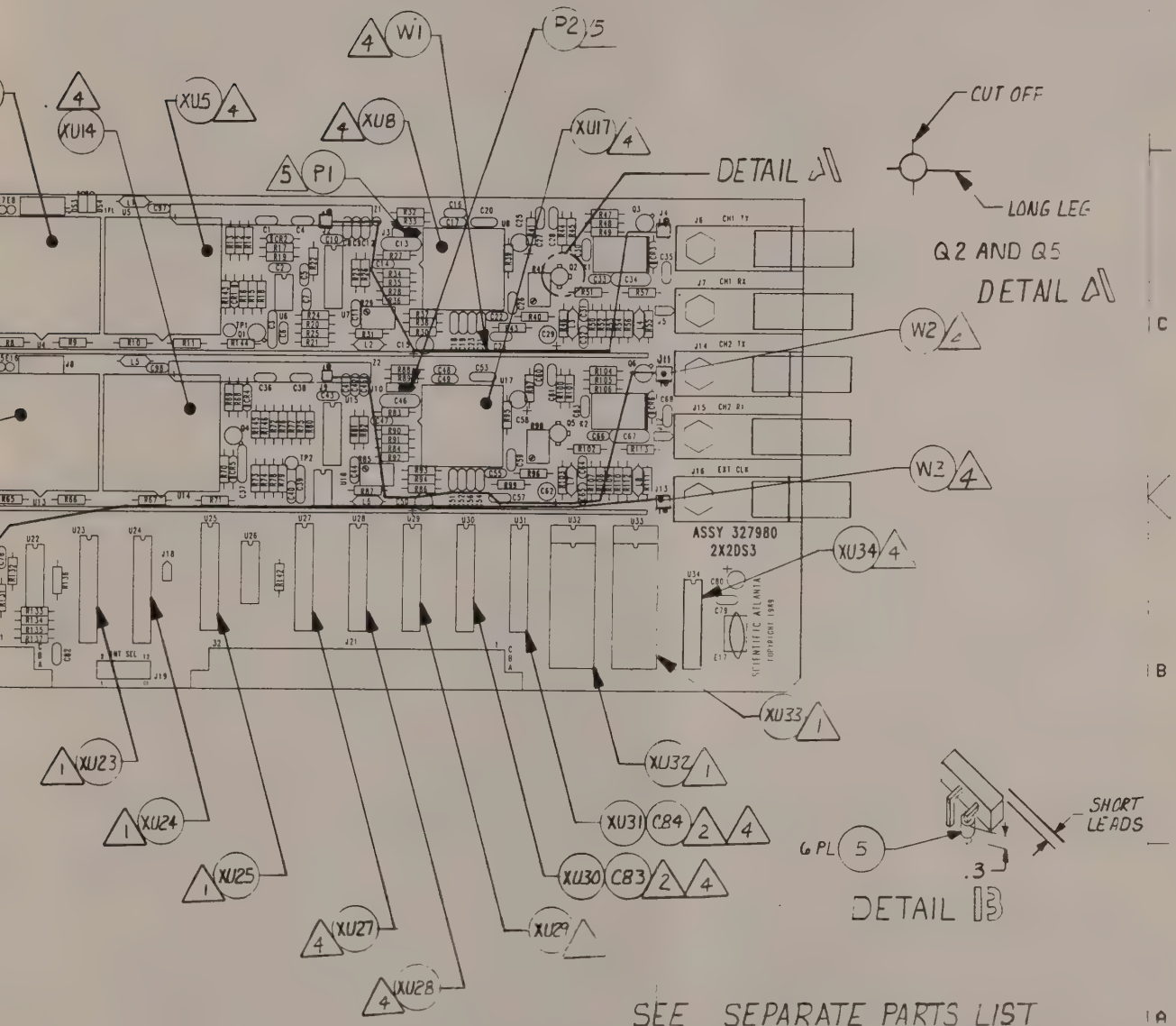

SEE SEPARATE PARTS LIST

DWN	[illegible]	5-23-89	**Scientific-Atlanta** P.O.BOX 105027 ATLANTA, GA 30348
ENGR	[illegible]	[illegible]	
CHK	Janice Coker	6-15-89	2X2DS3 SUB-ASSEMBLY
PROD	[illegible]	6-2[illegible]	
APVD	B. Sprinkle	FSCM NO. 10110	SCALE [illegible] SHT 1 OF 2 — DWG. NO. 327980 — REV E
SOURCE			

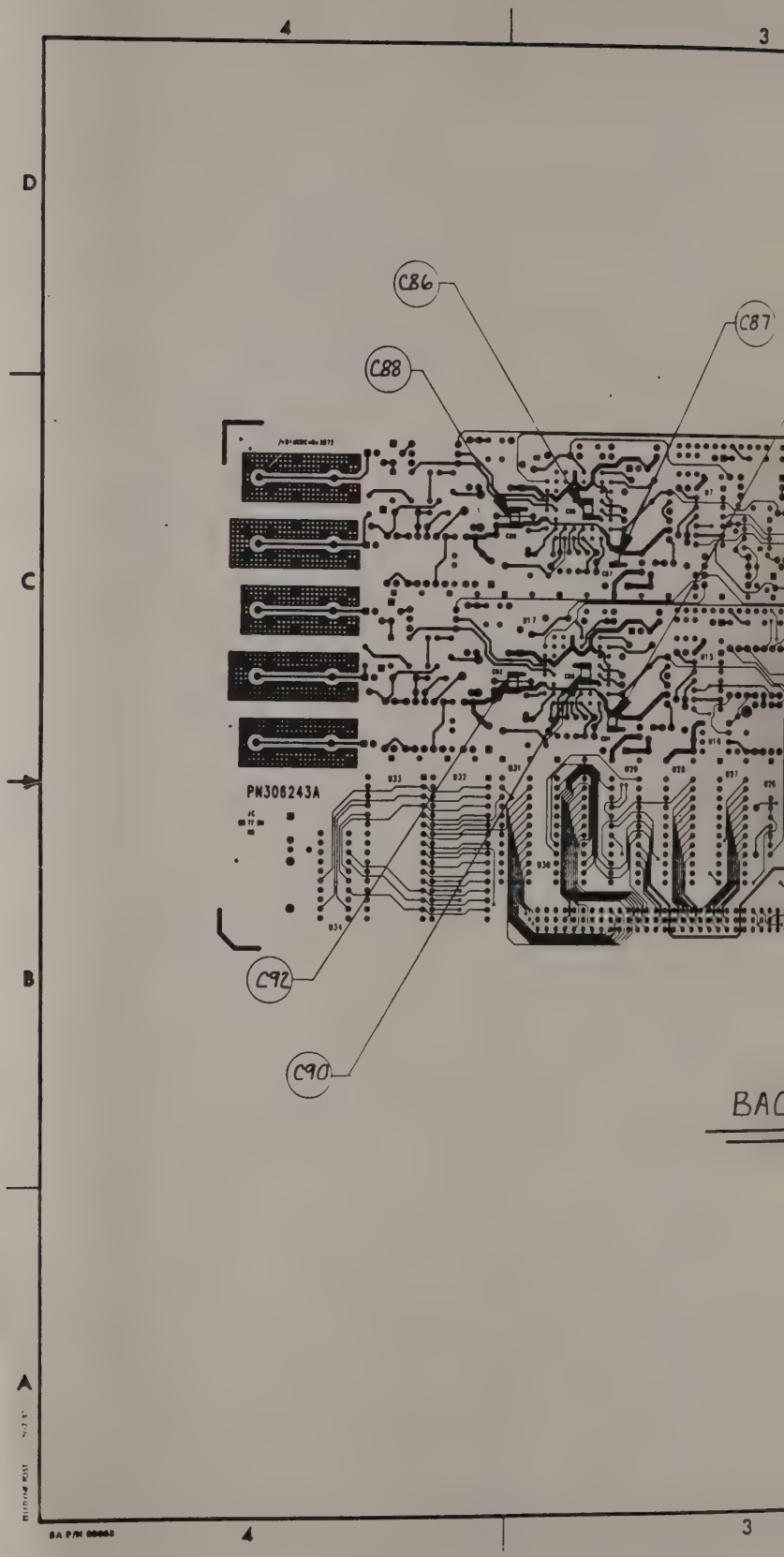
4
3
D
C
B
A
C86
C87
C88
C92
C90
PN306243A
BAC

APPLICATION		
QTY REQD	NEXT ASSY	USED ON
1	306200	AT9000

REVISIONS				
ZONE	REV	DESCRIPTION	DATE	APPROVED
	-	INITIAL RELEASE		
	A	SEE SH 1		
	B	SEE SH 1		
	C	SEE SH 1		
	D	SEE SH 1		
	E	SEE SH 1		

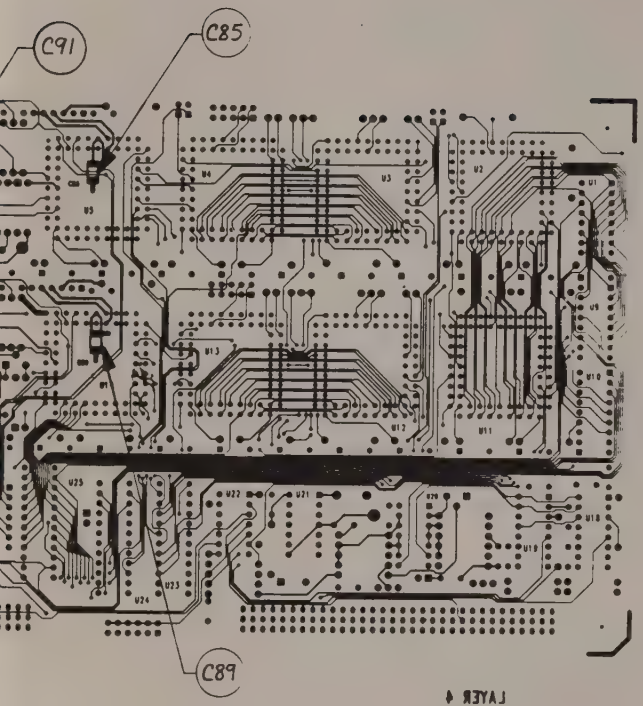

K VIEW

ITEM OR FIND NO	QTY REQD	S-A STOCK NO	NOMENCLATURE OR DESCRIPTION	MATL SPEC AND SIZE OR COMPONENT VALUE	IDENTIFYING OR PART NO	FSCM NO

PARTS LIST

UNLESS OTHERWISE SPECIFIED ALL CAPACITORS ARE IN MICRO FARADS AND ALL RESISTORS ARE IN OHMS ±10% AND 1/4 WATT

LAST REFERENCE DESIGNATION USED

C CB J R

Q R S U

ALL DIMENSIONS ARE IN INCHES UNLESS OTHERWISE SPECIFIED

TOLERANCES
2 PLACE DECIMAL ± .005
3 PLACE DECIMAL ± .002
1 PLACE DECIMAL ± 1

FRACTIONS ± ANGLES ± 30

MAX SURFACE ROUGHNESS 125 ALL MACHINED SURFACES EXCEPT AS NOTED

BREAK SHARP EDGES AND CORNERS .010 MAX

FINISH NONE

CONTRACT NO

DWN		6-27-94
ENGR		6/25/94
CHK		6-28-94
PROD		6/28/94
APVD		
APVD		

Scientific-Atlanta 3845 Pleasantdale Road Atlanta, Georgia 30340

2 X 2 DS3 SUB ASSEMBLY

SIZE	FSCM NO	DWG NO	REV
C	10110	327980	E

SCALE 1/1 SHEET 2

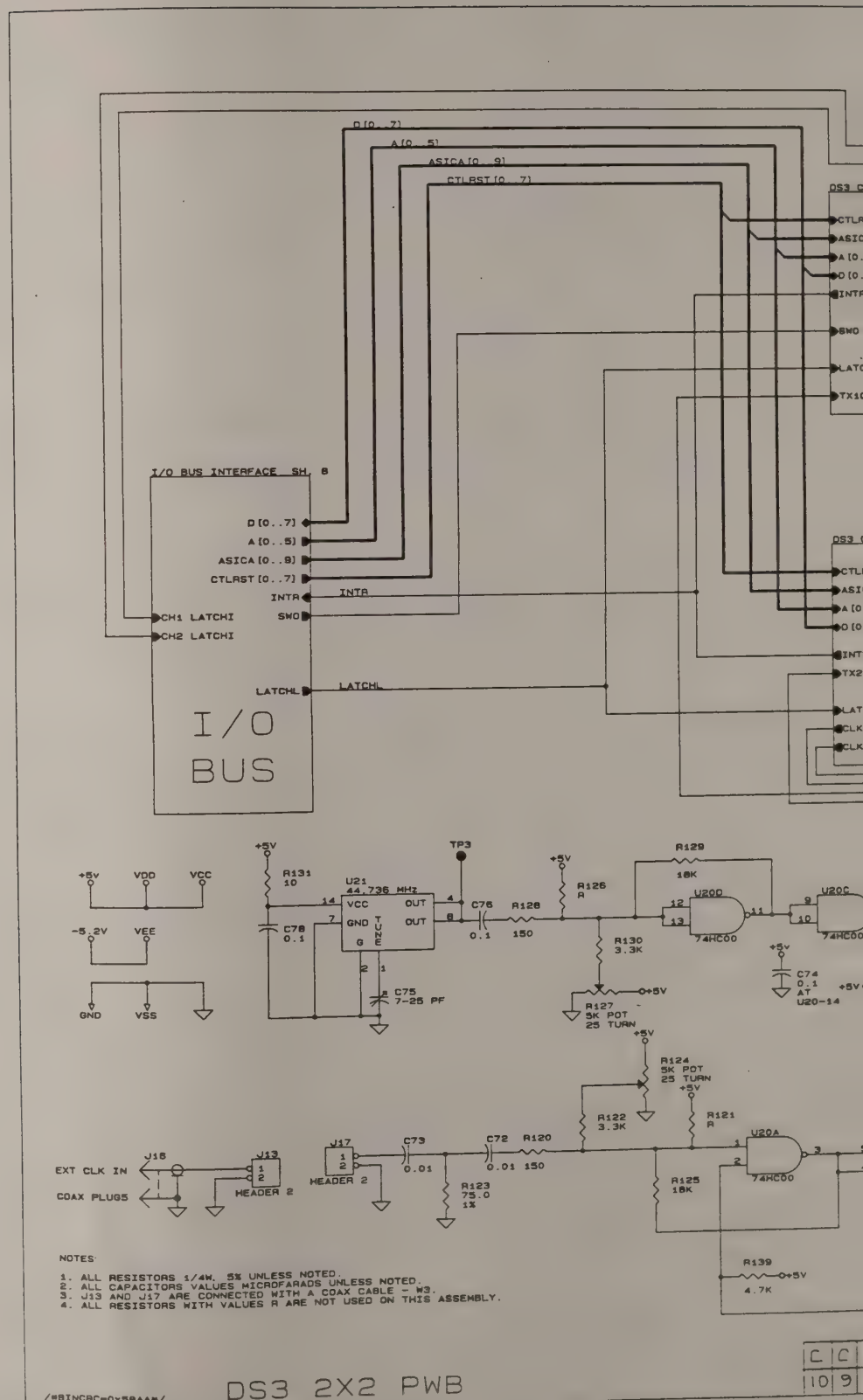
D[0..7]
A[0..5]
ASICA[0..9]
CTLRST[0..7]
I/O BUS INTERFACE SH. 8
D[0..7]
A[0..5]
ASICA[0..9]
CTLRST[0..7]
INTR
CH1 LATCHI
CH2 LATCHI
SWO
LATCHL
I/O BUS
+5V
VDD
VCC
-5.2V
VEE
GND
VSS
R131 10
U21 44.736 MHz
VCC
GND
OUT
OUT
TUNE
C78 0.1
C76 0.1
R126 150
R126 R
TP3
R129 18K
R130 3.3K
R127 5K POT 25 TURN
C75 7-25 PF
U20D
74HC00
U20C
74HC00
C74 0.1 AT U20-14
R124 5K POT 25 TURN
R122 3.3K
R121 R
U20A
74HC00
R125 18K
R139 4.7K
EXT CLK IN
COAX PLUGS
J16
J13
HEADER 2
J17
HEADER 2
C73 0.01
C72 0.01
R120 150
R123 75.0 1%
NOTES:
1. ALL RESISTORS 1/4W, 5% UNLESS NOTED.
2. ALL CAPACITORS VALUES MICROFARADS UNLESS NOTED.
3. J13 AND J17 ARE CONNECTED WITH A COAX CABLE - W3.
4. ALL RESISTORS WITH VALUES R ARE NOT USED ON THIS ASSEMBLY.
/*$INCRC=0x58AA*/
DS3 2X2 PWB
C
10
C
9

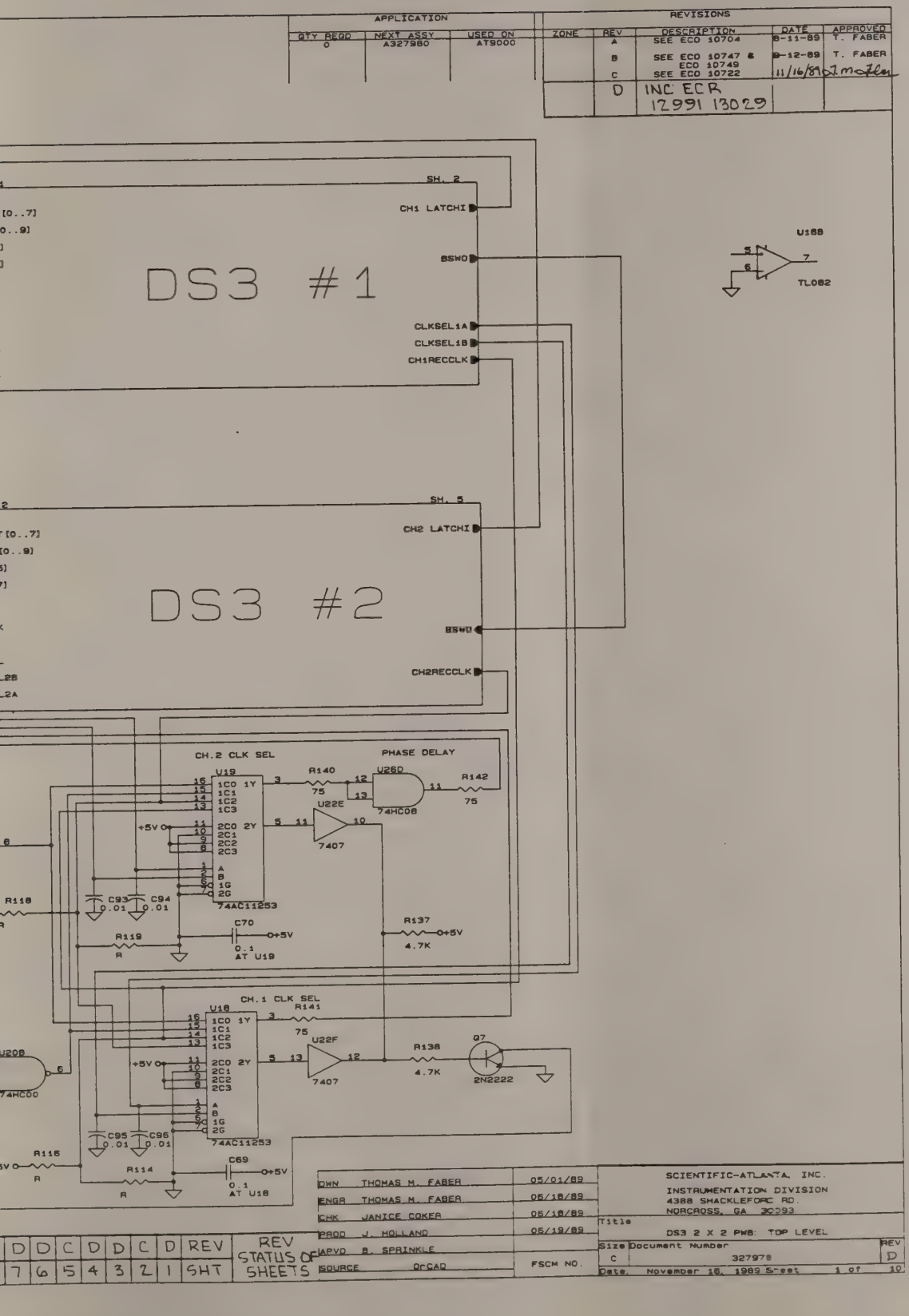
APPLICATION
QTY REQD 0
NEXT ASSY A327980
USED ON AT9000
REVISIONS
ZONE REV DESCRIPTION DATE APPROVED
A SEE ECO 10704 8-11-89 T. FABER
B SEE ECO 10747 & ECO 10749 9-12-89 T. FABER
C SEE ECO 10722 11/16/89
D INC ECR 12991 13029
SH. 2
CH1 LATCHI
BSWD
CLKSEL1A
CLKSEL1B
CH1RECCLK
DS3 #1
U16B
TL082
SH. 5
CH2 LATCHI
BSWD
CH2RECCLK
DS3 #2
CH.2 CLK SEL
PHASE DELAY
U19
74AC11253
U26D
74HC08
U22E
7407
R140
R142
75
C93 0.01
C94 0.01
C70 0.1 AT U19
R119
R137 4.7K
+5V
CH.1 CLK SEL
U18
R141
U22F
R138 4.7K
Q7
2N2222
C95 0.01
C96 0.01
C69 0.1 AT U18
R114
R115
SCIENTIFIC-ATLANTA, INC.
INSTRUMENTATION DIVISION
4388 SHACKLEFORD RD.
NORCROSS, GA 30093
DWN THOMAS M. FABER 05/01/89
ENGR THOMAS M. FABER 05/18/89
CHK JANICE COKER 05/18/89
PROD J. HOLLAND 05/18/89
APVD B. SPRINKLE
SOURCE OrCAD
FSCM NO.
Title DS3 2 X 2 PWB: TOP LEVEL
Size C Document Number 327978 REV D
Date: November 16, 1989 Sheet 1 of 10
REV STATUS OF SHEETS
D D C D D C D REV
7 6 5 4 3 2 1 SHT

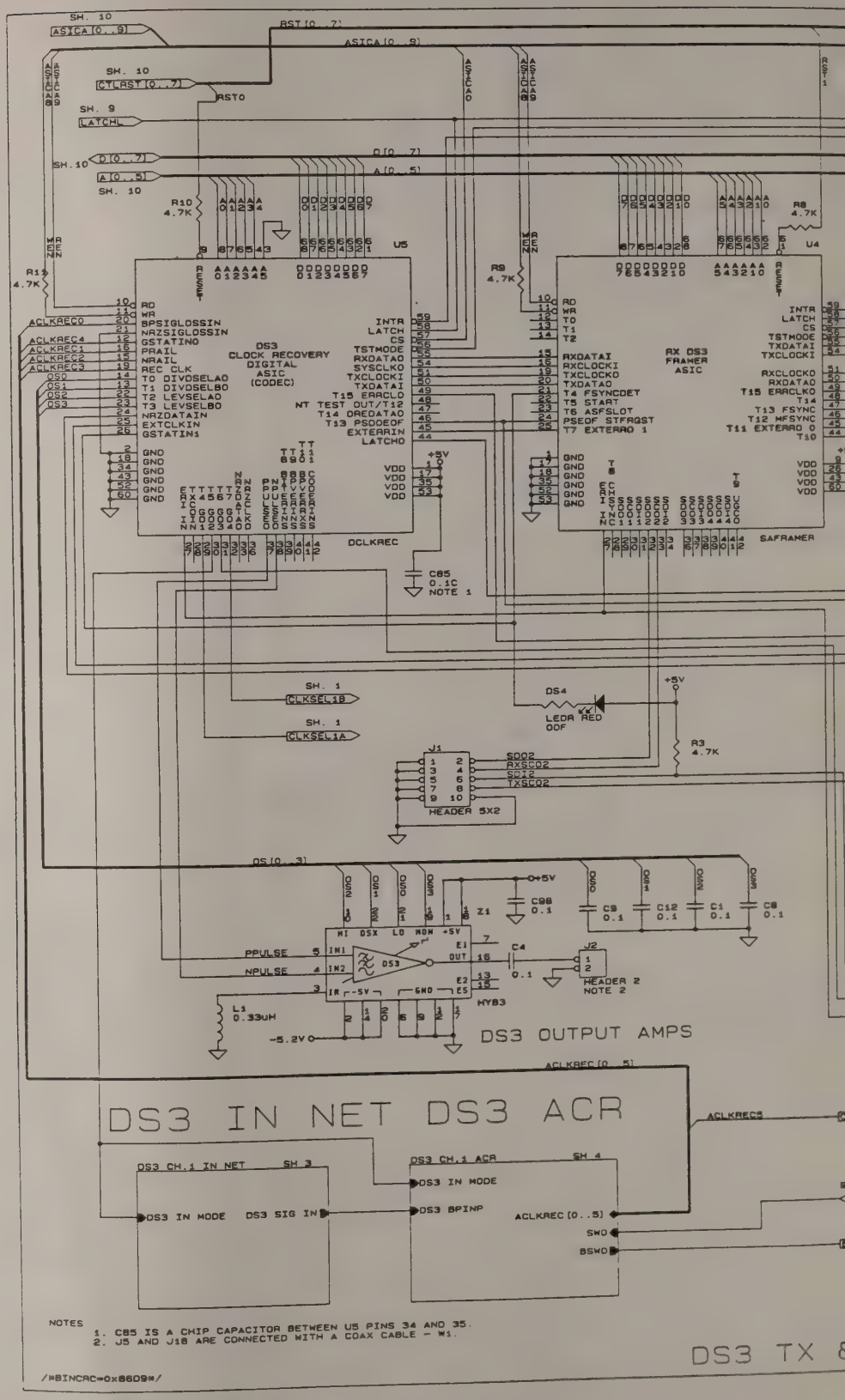
DS3 OUTPUT AMPS
DS3 IN NET DS3 ACR
DS3 CH.1 IN NET
DS3 CH.1 ACR
DS3 IN MODE
DS3 SIG IN
DS3 BPINP
ACLKREC[0..5]
SWO
BSWO
NOTES
1. C85 IS A CHIP CAPACITOR BETWEEN U5 PINS 34 AND 35.
2. J5 AND J18 ARE CONNECTED WITH A COAX CABLE - W1.
DS3 TX

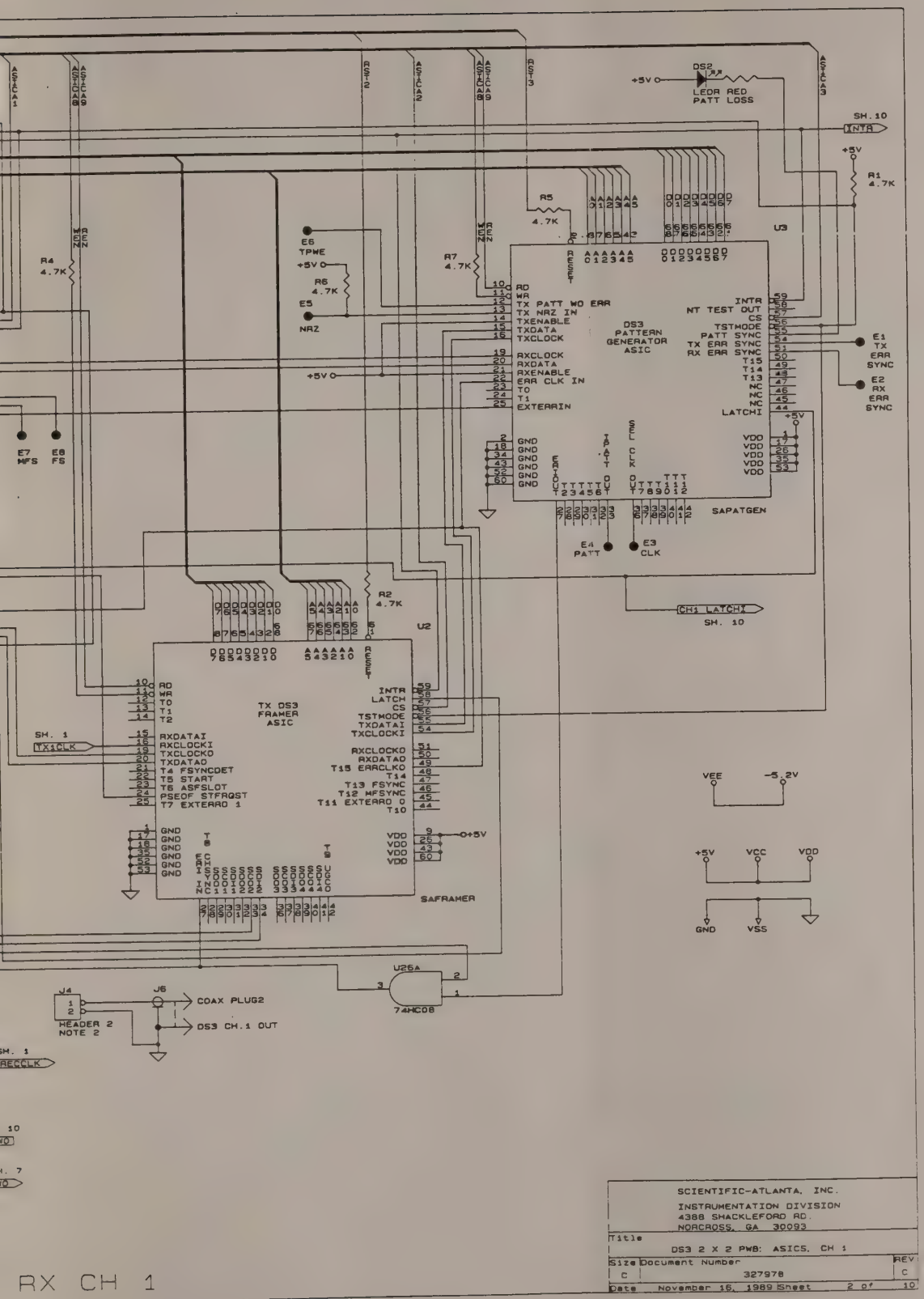

SCIENTIFIC-ATLANTA, INC.		
INSTRUMENTATION DIVISION 4388 SHACKLEFORD RD. NORCROSS, GA 30093		
Title: DS3 2 X 2 PWB: ASICS, CH 1		
Size: C	Document Number: 327978	REV: C
Date: November 16, 1989	Sheet: 2 of 10	

RX CH 1

DS3 INPUT DS

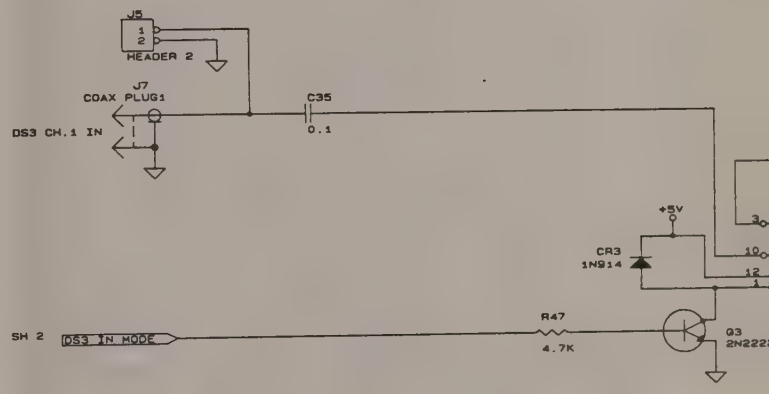

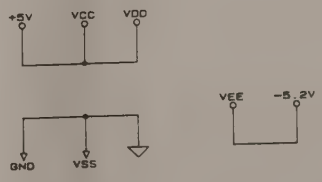

/*$INCRC=0x2794*/

D | SEE SHEET 1

SX NETWORK CH 1

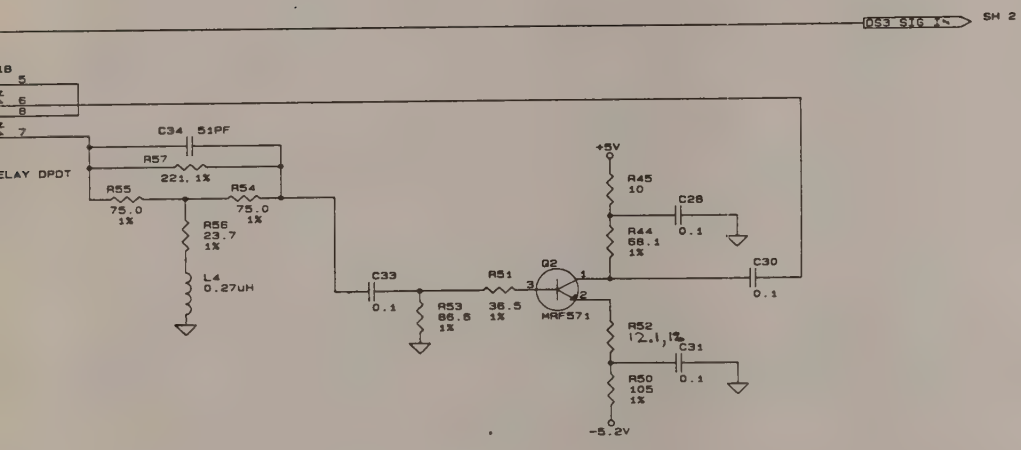

SCIENTIFIC-ATLANTA, INC INSTRUMENTATION DIVISION 4388 SHACKLEFORD RD. NORCROSS, GA 30093	
Title DS3 2 X 2 PWB: INPUT DSX NETWORK, CH 1	
Size Document Number C 327976	REV D
Date November 15, 1985 Sheet 3 of 10	

DS3 ANALOG CLOCK RECOVERY CH

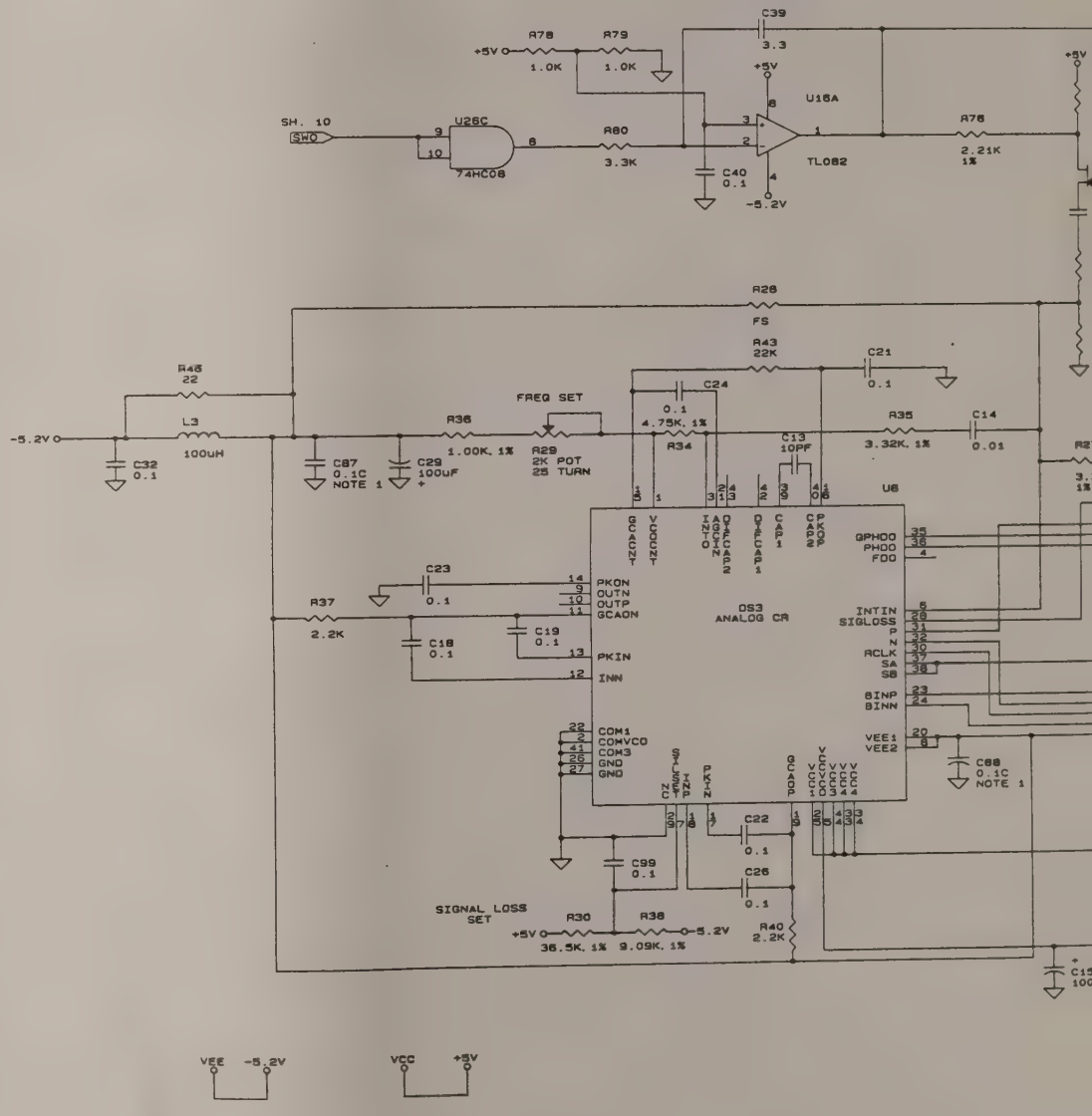

NOTES:

1. C86, C87, C88 ARE CHIP CAPACITORS.

/*8INCRC=0x46E5*/

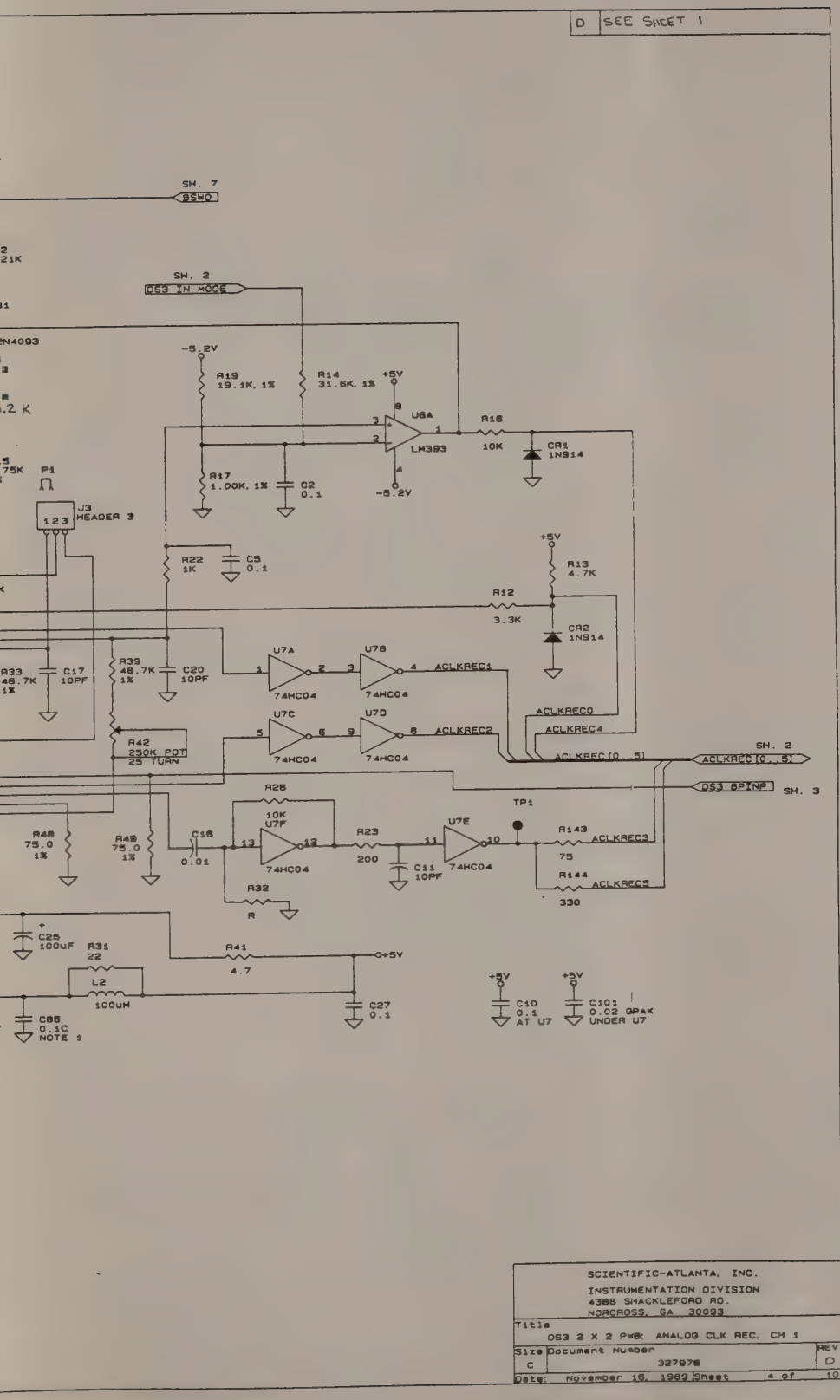
D
SEE SHEET 1
SH. 7
BSHO
SH. 2
OS3 IN MODE
-5.2V
R19
19.1K, 1%
R14
31.6K, 1%
+5V
U8A
LM393
R16
10K
CR1
1N914
R17
1.00K, 1%
C2
0.1
-5.2V
P1
J3
HEADER 3
R22
1K
C5
0.1
+5V
R13
4.7K
R12
3.3K
CR2
1N914
C17
10PF
R39
48.7K
1%
C20
10PF
U7A
U7B
74HC04
74HC04
ACLKREC1
U7C
U7D
74HC04
74HC04
ACLKREC2
ACLKREC0
ACLKREC4
ACLKREC[0..5]
SH. 2
ACLKREC[0..5]
R42
250K POT
25 TURN
OS3 8PINP
SH. 3
R26
10K
U7F
TP1
R48
75.0
1%
R49
75.0
1%
C16
0.01
74HC04
R23
200
U7E
74HC04
C11
10PF
R143
75
ACLKREC3
R144
330
ACLKREC5
R32
R
C25
100uF
R31
22
L2
100uH
R41
4.7
+5V
C27
0.1
C86
0.1C
NOTE 1
+5V
C10
0.1
AT U7
+5V
C101
0.02 QPAK
UNDER U7
SCIENTIFIC-ATLANTA, INC.
INSTRUMENTATION DIVISION
4386 SHACKLEFORD RD.
NORCROSS, GA 30093
Title
OS3 2 X 2 PWB: ANALOG CLK REC. CH 1
Size
C
Document Number
327978
REV
D
Date: November 16, 1989
Sheet 4 of 10

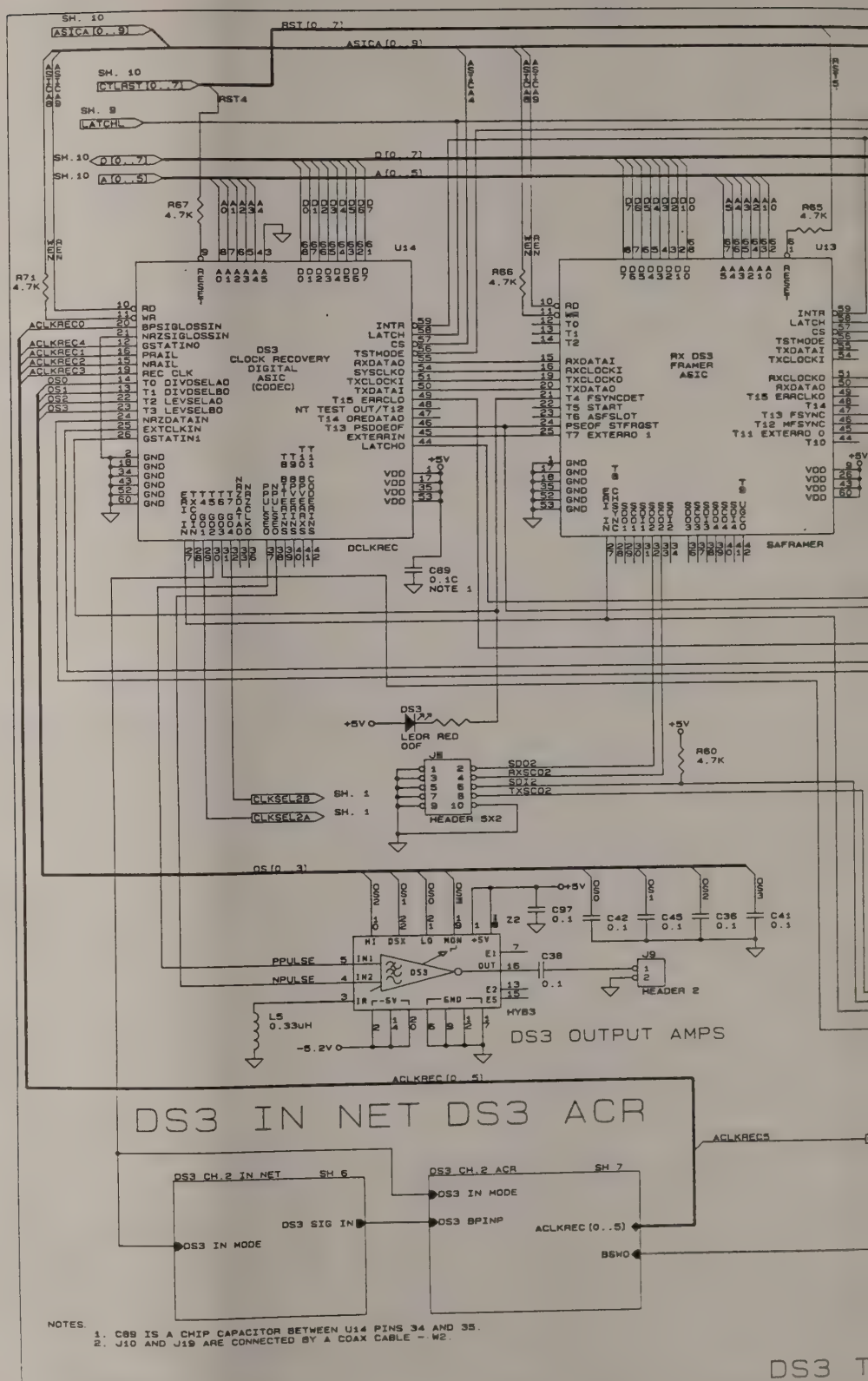
DS3 OUTPUT AMPS
DS3 IN NET DS3 ACR
DS3 CH.2 IN NET
DS3 CH.2 ACR
DS3 IN MODE
DS3 SIG IN
DS3 BPINP
ACLKREC[0..5)
BSWO
NOTES.
1. C89 IS A CHIP CAPACITOR BETWEEN U14 PINS 34 AND 35.
2. J10 AND J19 ARE CONNECTED BY A COAX CABLE - W2.

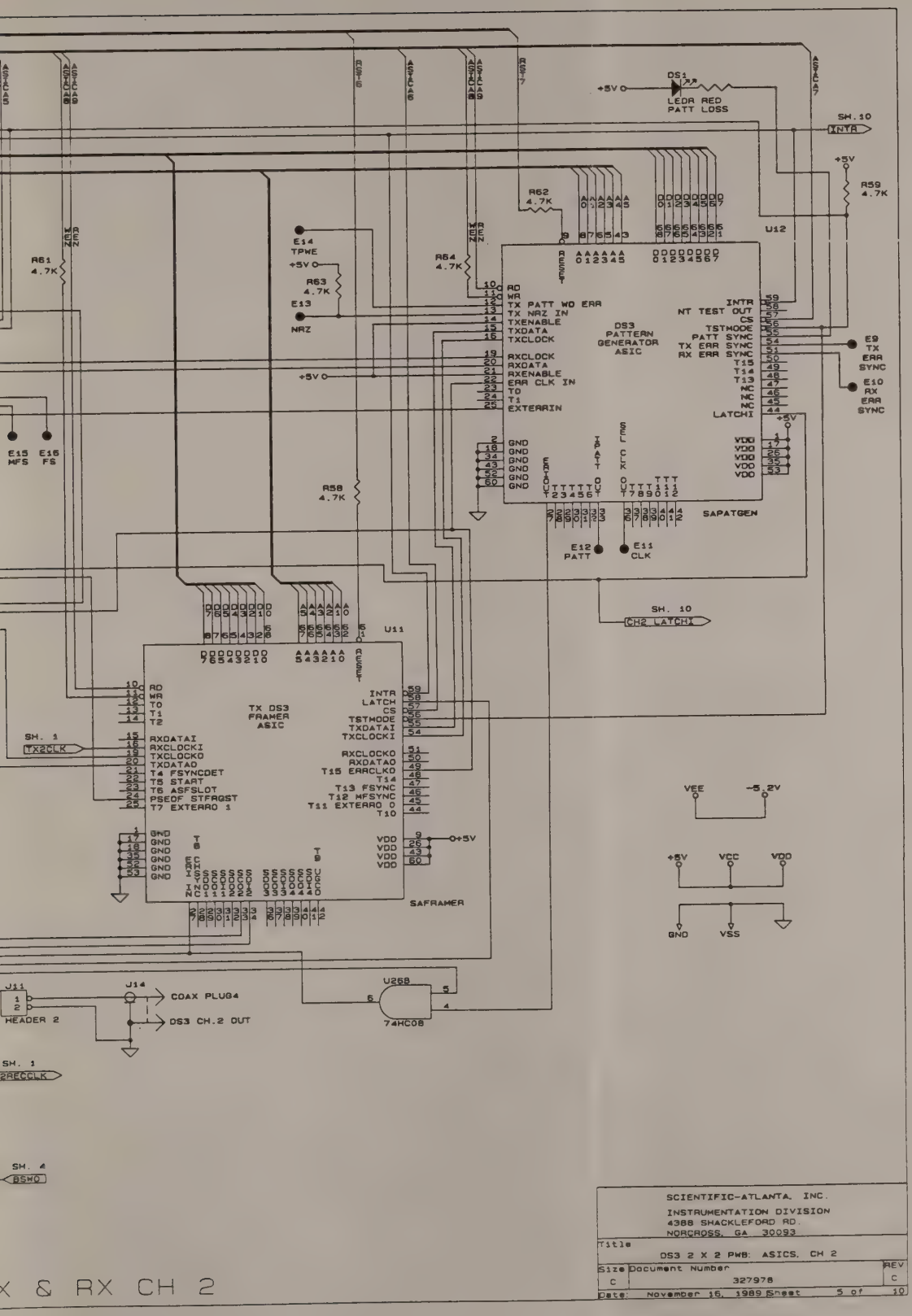

SCIENTIFIC-ATLANTA, INC.
INSTRUMENTATION DIVISION
4388 SHACKLEFORD RD.
NORCROSS, GA 30093

Title: DS3 2 X 2 PWB: ASICS, CH 2

Size	Document Number	REV
C	327978	C

Date: November 16, 1989 Sheet 5 of 10

X & RX CH 2

DS3 INPUT D

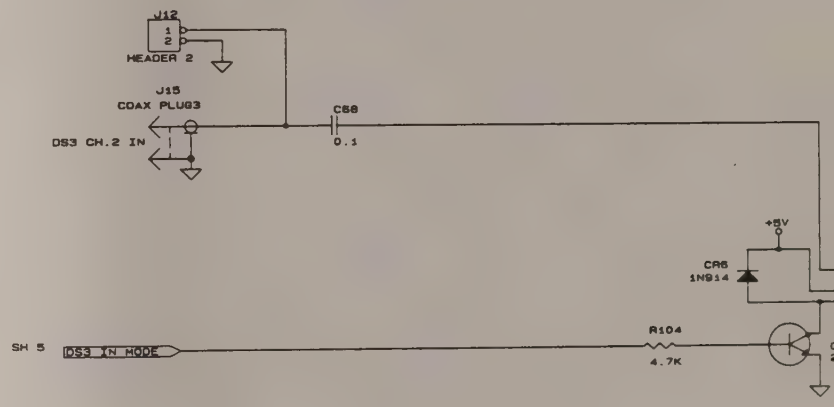

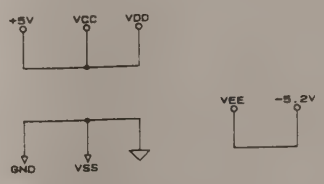

/*$INCRC=0x8341*/

D | SEE SHEET 1

SX NETWORK CH 2

DS3 SIG IN SH 5

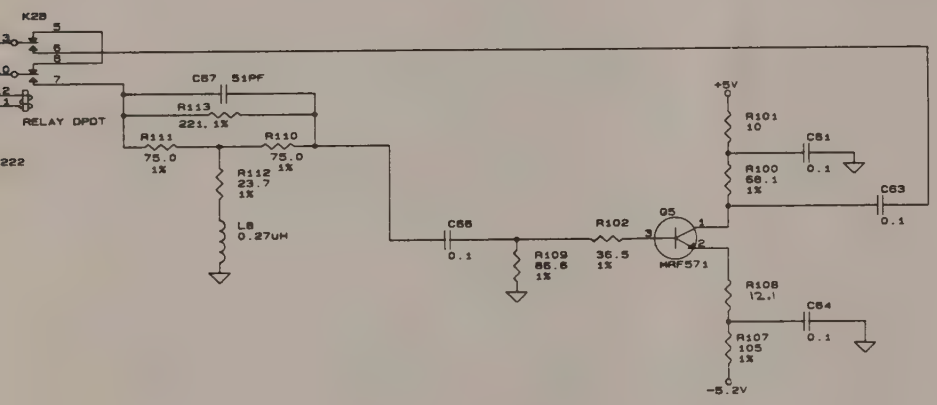

SCIENTIFIC-ATLANTA, INC.	
INSTRUMENTATION DIVISION 4388 SHACKLEFORD RD. NORCROSS, GA 30093	
Title: DS3 2 X 2 PWB: INPUT DSX NETWORK, CH 2	
Size: C	Document Number: 327978 — REV: D
Date: November 16, 1989	Sheet 6 of 10

DS3 ANALOG CLOCK REC

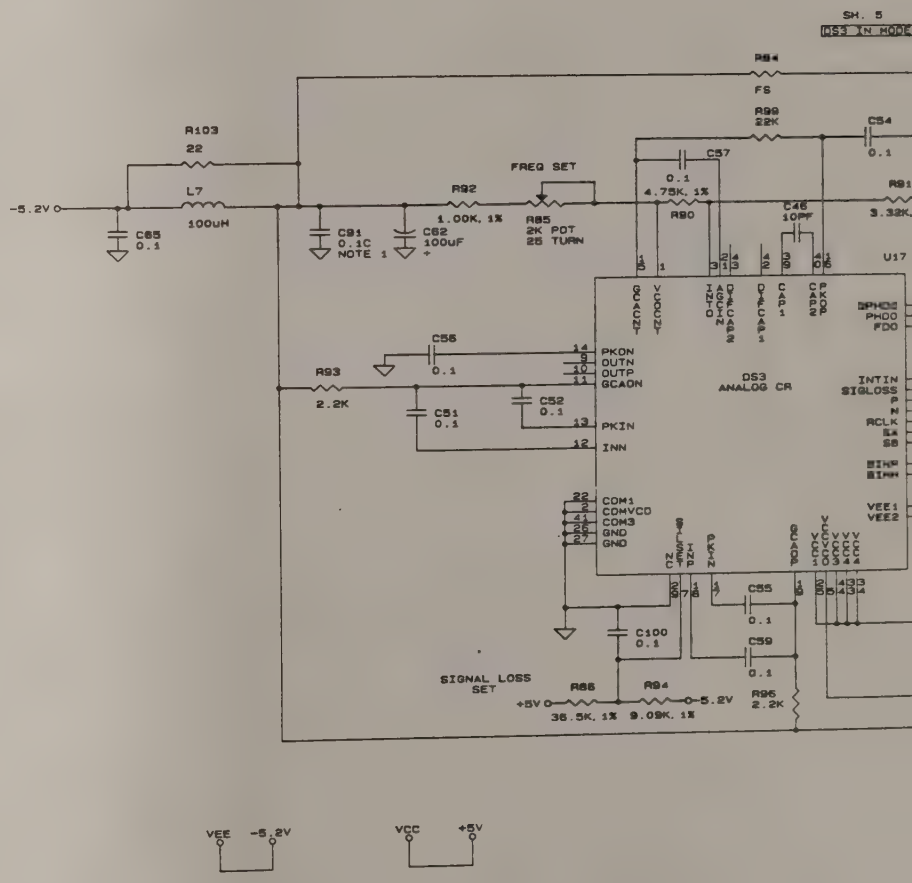

VEE -5.2V

VCC +5V

NOTES

1. C90, C91, C92 ARE CHIP CAPACITORS.

/*BINCRC=0x6148*/

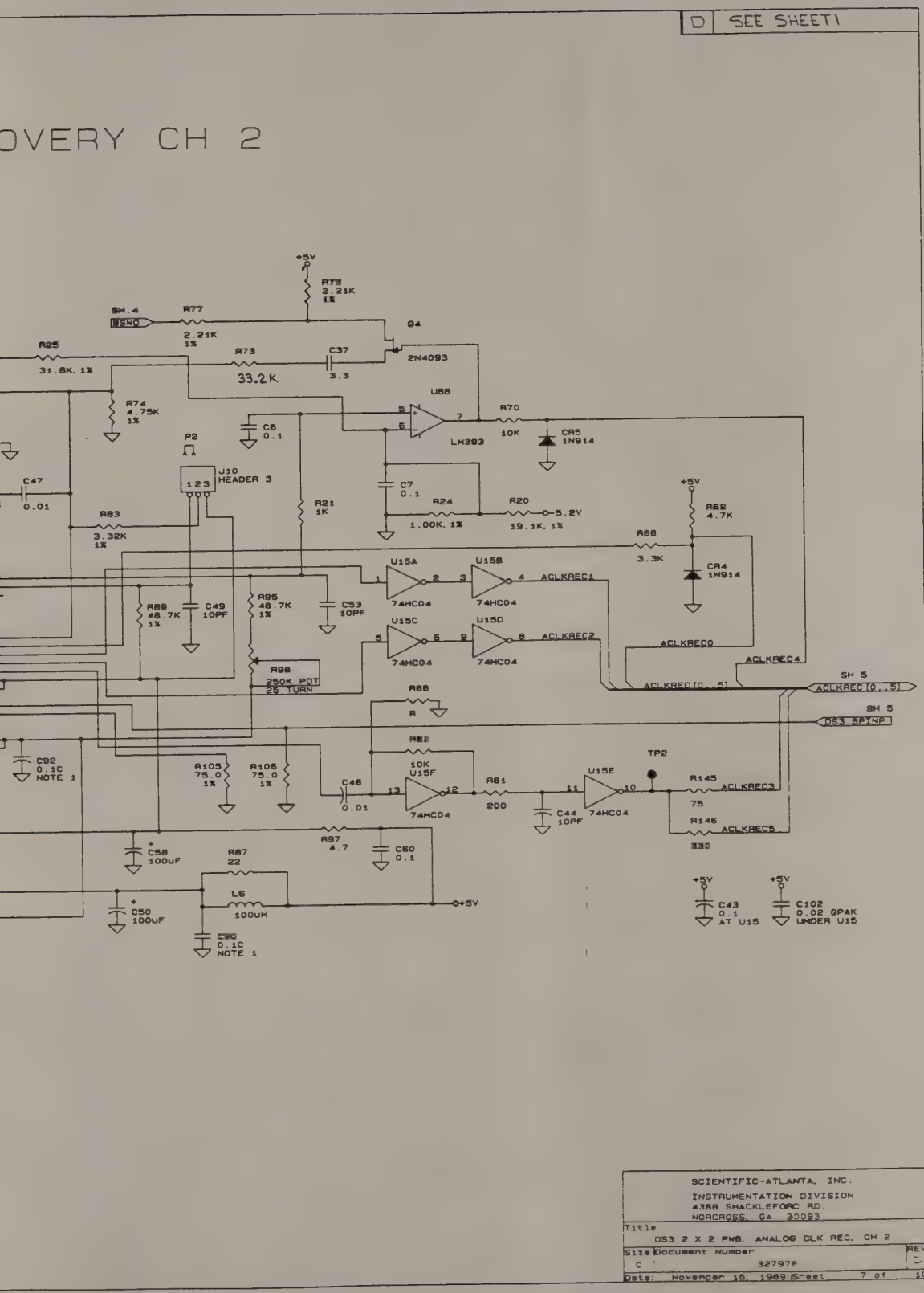
D
SEE SHEET1
OVERY CH 2
+5V
RT3
2.21K
1%
SH.4
BSW0
R77
2.21K
1%
Q4
2N4093
R25
31.6K, 1%
R73
33.2K
C37
3.3
R74
4.75K
1%
U6B
LM393
R70
10K
CR5
1N914
C6
0.1
P2
J10
HEADER 3
C47
0.01
C7
0.1
R24
1.00K, 1%
R20
19.1K, 1%
-5.2V
R21
1K
R83
3.32K
1%
R59
4.7K
R68
3.3K
CR4
1N914
U15A
U15B
74HC04
ACLKREC1
R89
48.7K
1%
C49
10PF
R95
48.7K
1%
C53
10PF
U15C
U15D
ACLKREC2
ACLKREC0
ACLKREC4
R98
250K POT
25 TURN
ACLKREC[0..5]
SH 5
R88
R
DS3 8PINP
R87
10K
U15F
TP2
C92
0.1C
NOTE 1
R105
75.0
1%
R106
75.0
1%
C48
0.01
R81
200
U15E
C44
10PF
R145
75
ACLKREC3
R146
330
ACLKREC5
R97
4.7
C60
0.1
C58
100uF
R87
22
L6
100uH
C50
100uF
C90
0.1C
NOTE 1
C43
0.1
AT U15
C102
0.02 QPAK
UNDER U15
SCIENTIFIC-ATLANTA, INC.
INSTRUMENTATION DIVISION
4388 SHACKLEFORD RD.
NORCROSS, GA 30093
Title
DS3 2 X 2 PWB. ANALOG CLK REC. CH 2
Size
C
Document Number
327978
REV
C
Date: November 16, 1989
Sheet 7 of 10

2 X 2 BUS

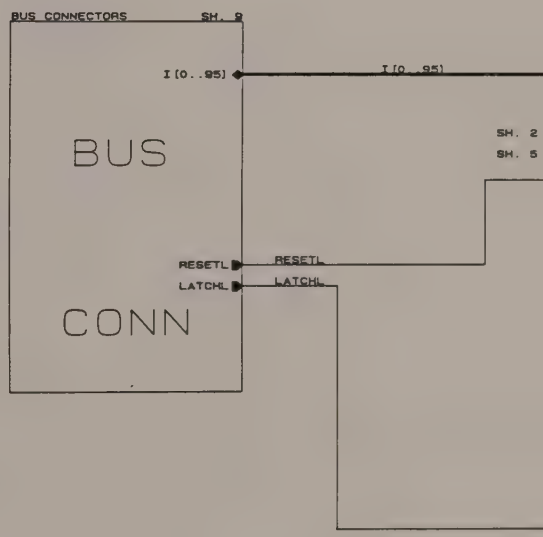

/*$INCRC=0x034D*/

INTERFACE

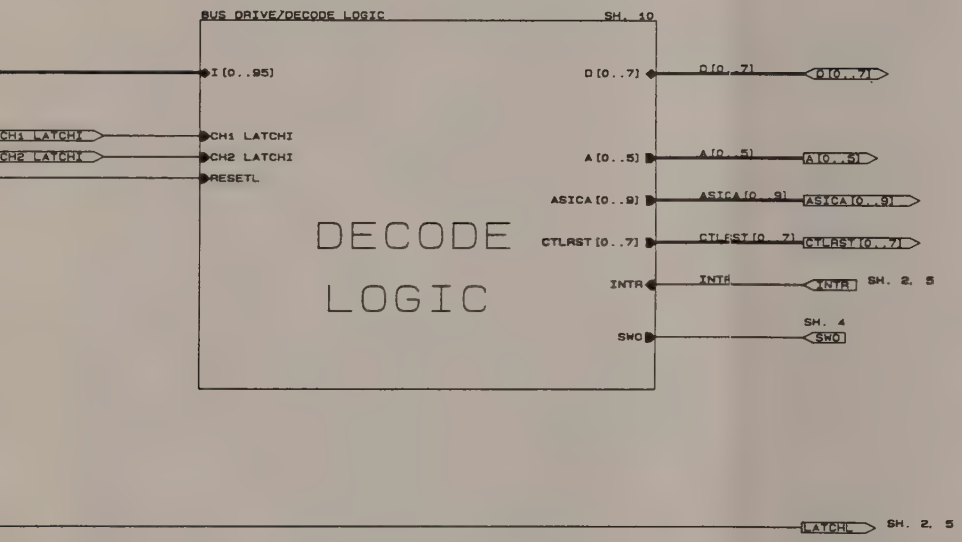

SCIENTIFIC-ATLANTA, INC. INSTRUMENTATION DIVISION 4386 SHACKLEFORD RD. NORCROSS, GA 30093		
Title DS3 2 X 2 PWB: BUS INTERFACE INTERCONNECT		
Size C	Document Number 327978	REV C
Date: November 15, 1989	Sheet 8 of 10	

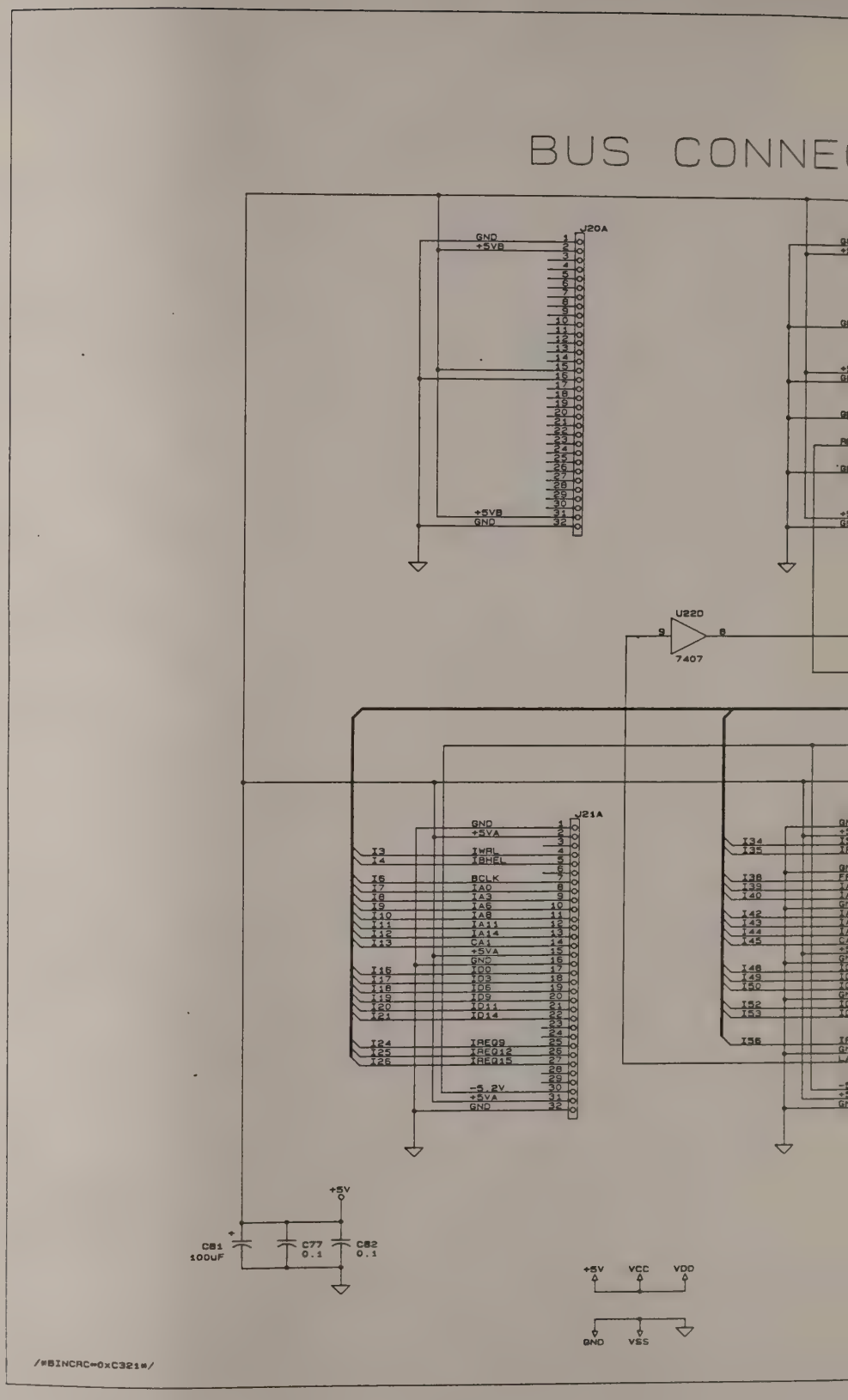
BUS CONNE
J20A
GND
+5VB
+5VB
GND
U22D
9
8
7407
J21A
GND
+5VA
I3
I4
IWRL
IBHEL
I6
I7
I8
I9
I10
I11
I12
I13
BCLK
IA0
IA3
IA6
IA8
IA11
IA14
CA1
+5VA
GND
I15
I17
I18
I19
I20
I21
ID3
ID6
ID9
ID11
ID14
I24
I25
I26
IREQ9
IREQ12
IREQ15
-5.2V
+5VA
GND
I34
I35
I38
I39
I40
I42
I43
I44
I45
I46
I49
I50
I52
I53
I56
+5V
C81
100uF
C77
0.1
C82
0.1
+5V
VCC
VDD
GND
VSS
/*BINCRC=0xC321*/

CTORS

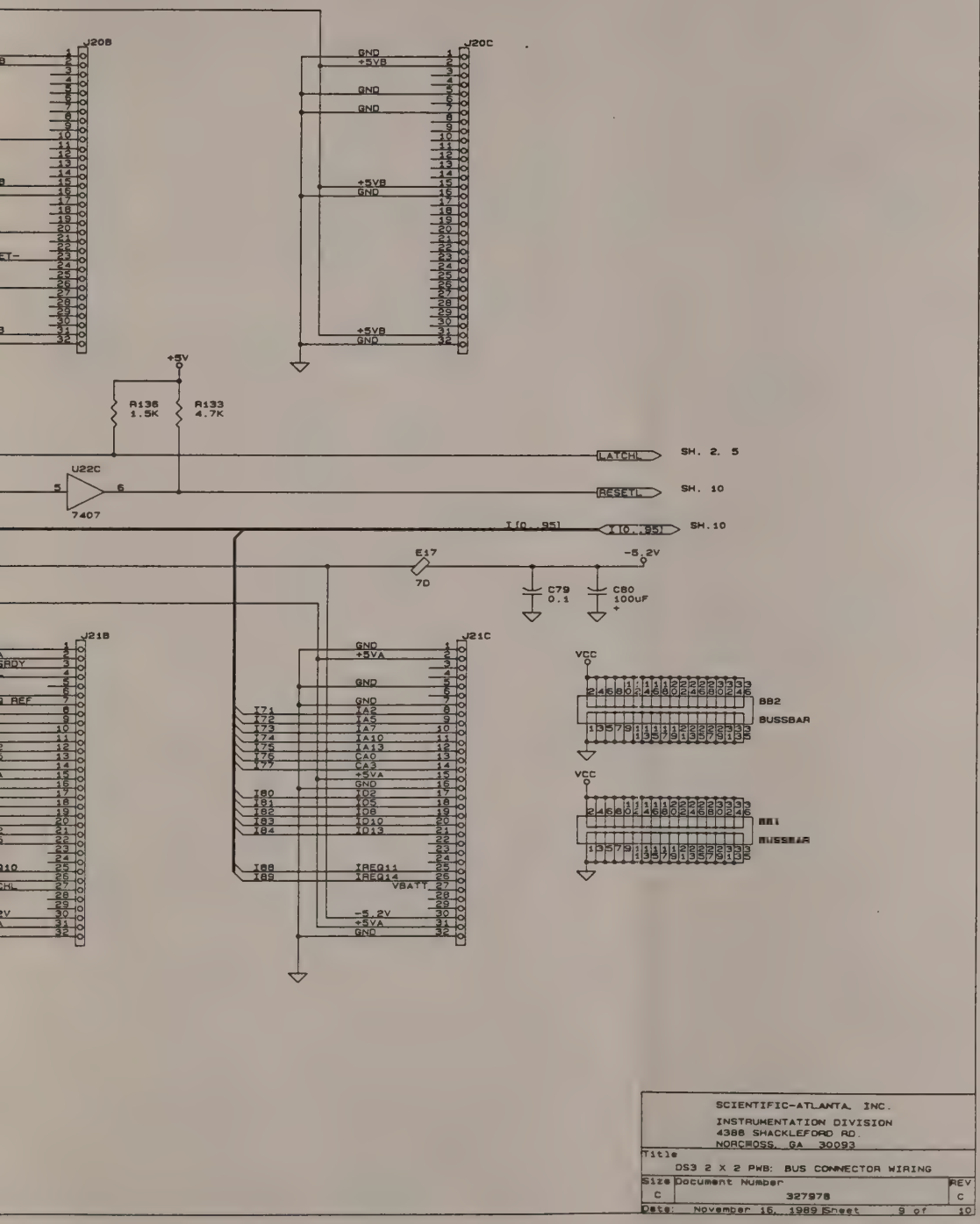

SCIENTIFIC-ATLANTA, INC.		
INSTRUMENTATION DIVISION 4388 SHACKLEFORD RD. NORCROSS, GA 30093		
Title: DS3 2 X 2 PWB: BUS CONNECTOR WIRING		
Size: C	Document Number: 327978	REV: C
Date: November 16, 1989	Sheet 9 of 10	

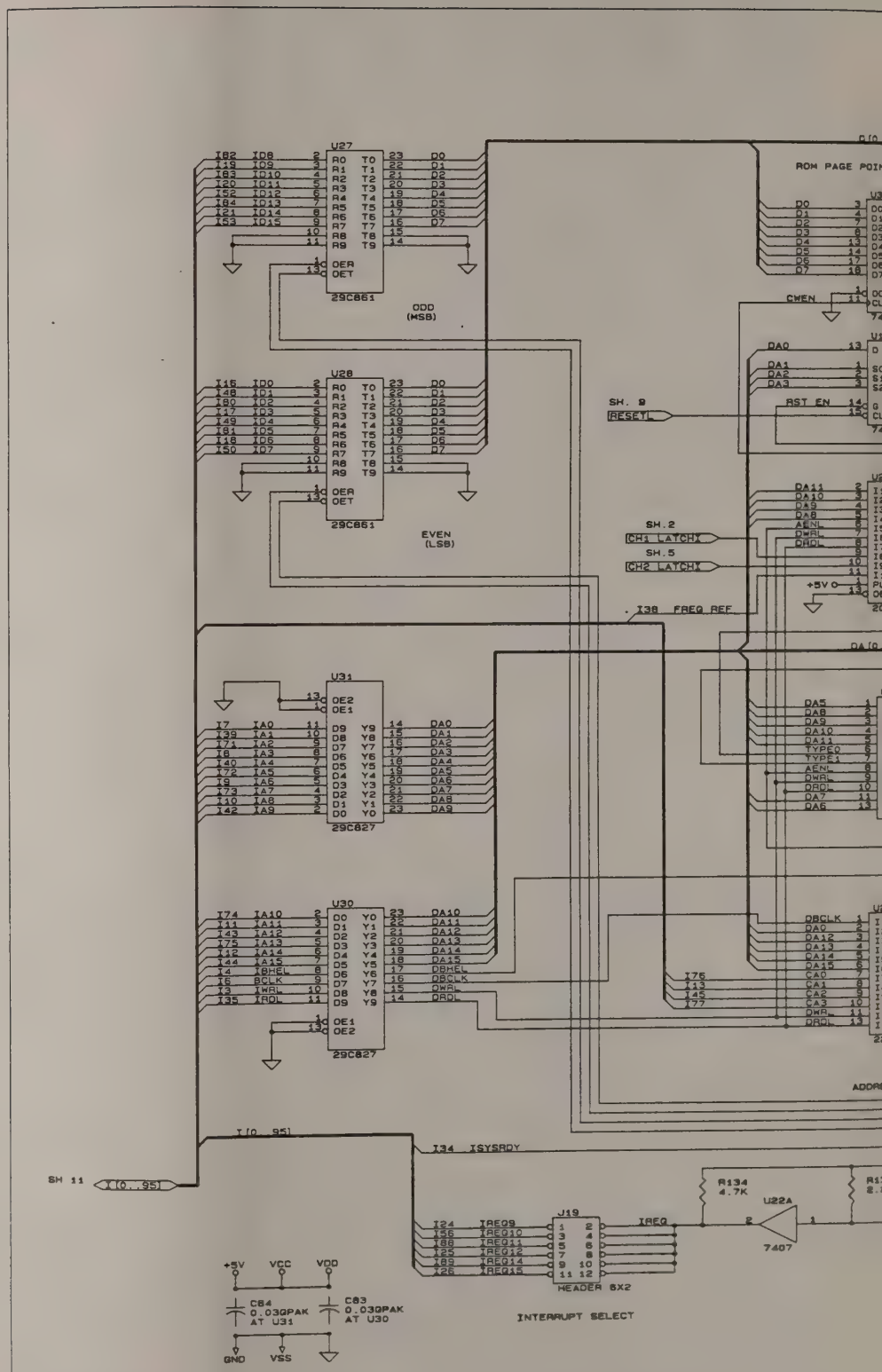
U27
29C861
ODD
(MSB)
U28
29C861
EVEN
(LSB)
ROM PAGE POI
CWEN
RST EN
SH. 9
RESETL
SH.2
CH1 LATCH
SH.5
CH2 LATCH
+5V
I38 FREQ REF
U31
29C827
U30
29C827
DBCLK
DA0
DA12
DA13
DA14
DA15
CA0
CA1
CA2
CA3
DWRL
DRDL
I75
I13
I45
I77
SH 11
I[0..95]
I34 ISYSRDY
R134
4.7K
U22A
7407
J19
HEADER 6X2
IREQ
INTERRUPT SELECT
+5V
VCC
VDD
C84
0.03UPAK
AT U31
C83
0.03UPAK
AT U30
GND
VSS
/*BINCRC=0x55E8*/
DS3 2 X 2 BUS INTERFACE LOGIC

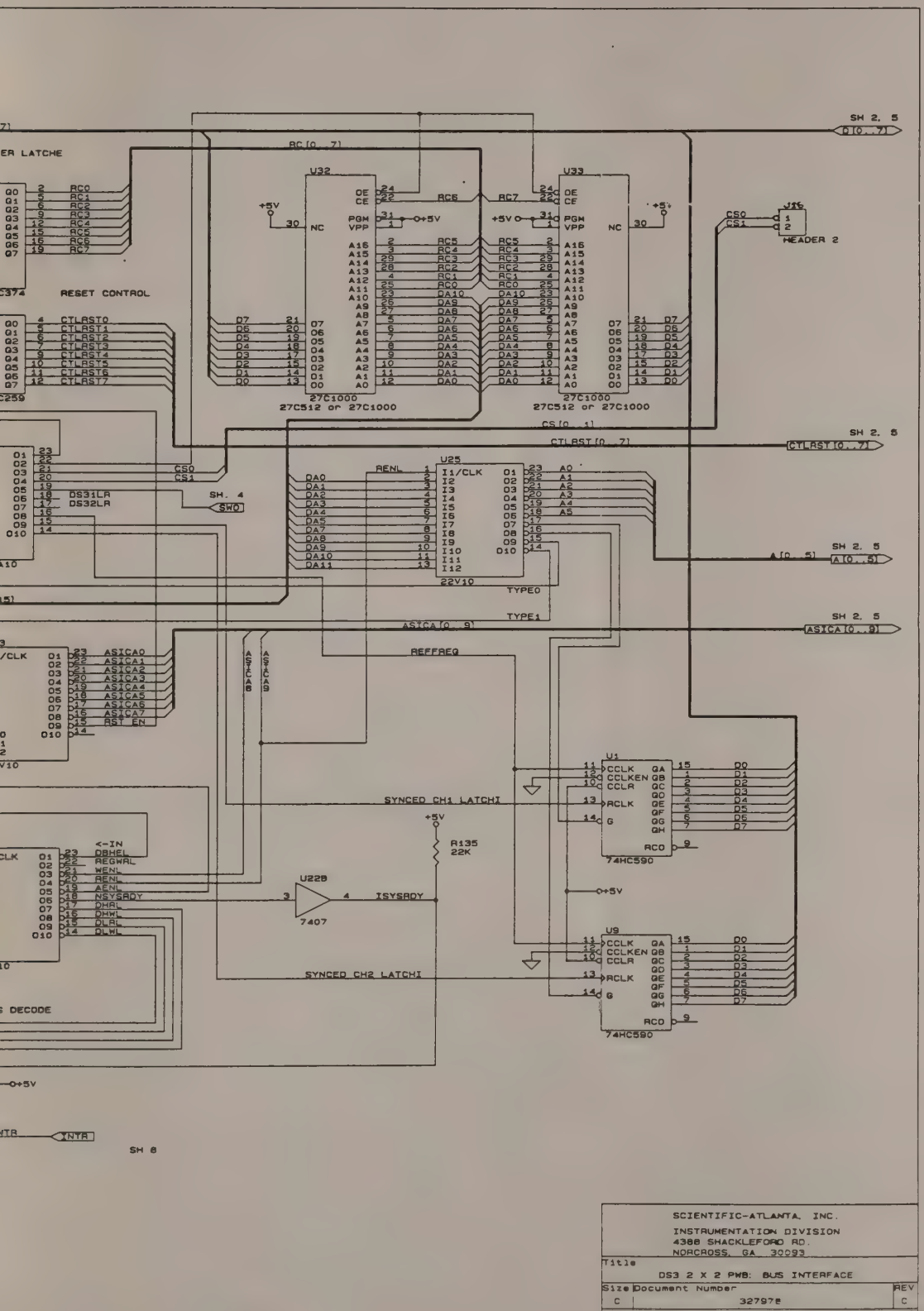

SCIENTIFIC-ATLANTA, INC.		
INSTRUMENTATION DIVISION 4388 SHACKLEFORD RD. NORCROSS, GA 30093		
Title: DS3 2 X 2 PWB: BUS INTERFACE		
Size: C	Document Number: 327978	REV: C
Date: November 16, 1989	Sheet 10 of 10	

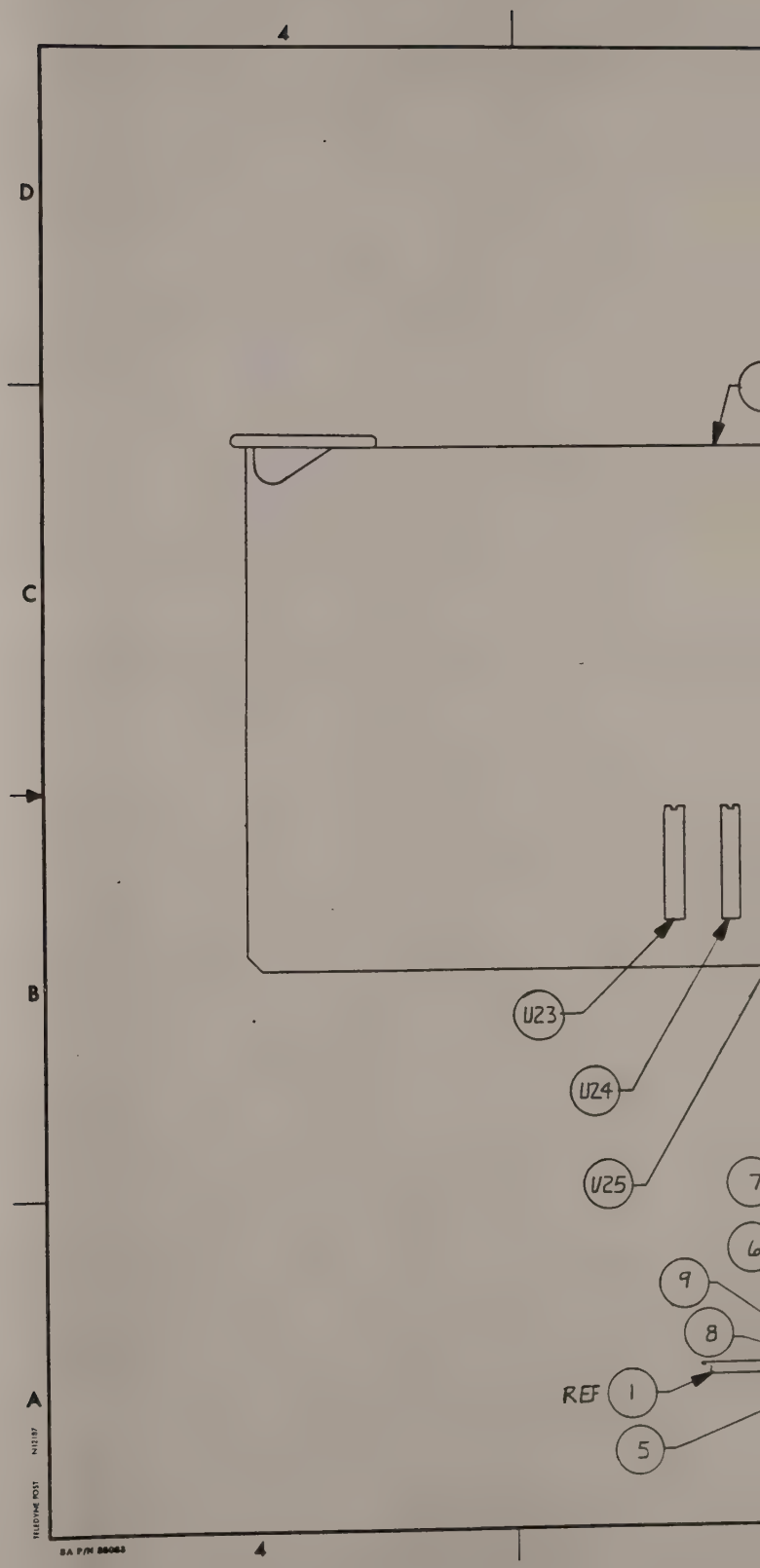
4
D
C
B
A
U23
U24
U25
7
6
9
8
REF
1
5
4

APPLICATION		
QTY REQD	NEXT ASSY	USED ON
1	306200	AT9000

REVISIONS				
ZONE	REV	DESCRIPTION	DATE	APPROVED
	-	INITIAL RELEASE		
	A	ECO 10946	2-8-90	
	B	ECO 11003	7/10/90	
	C	ECO 11351, 11365	5/14/91	

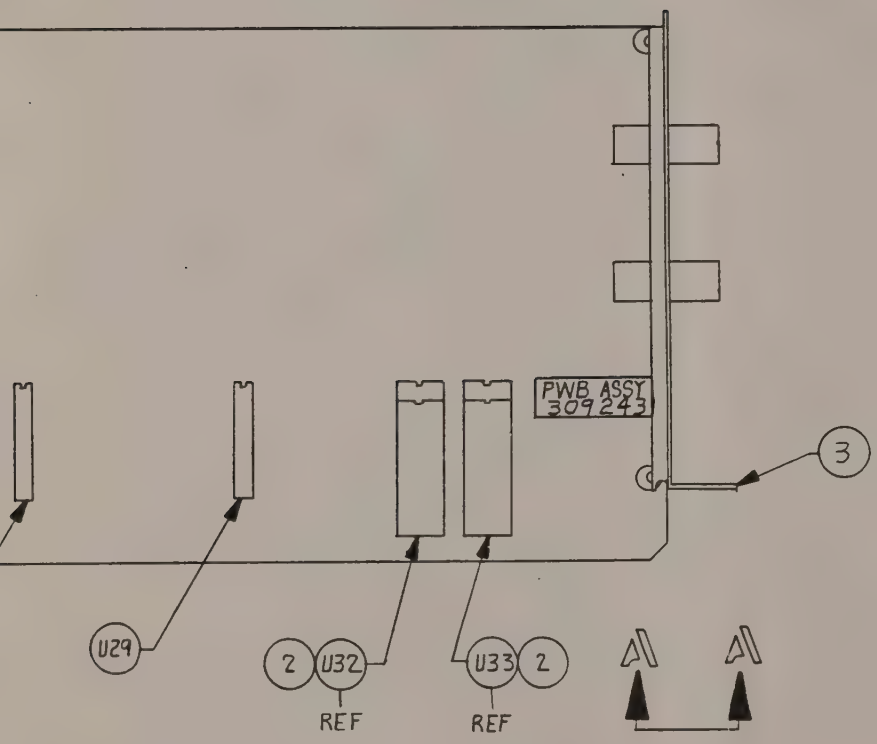

SEE SEPARATE PARTS LIST

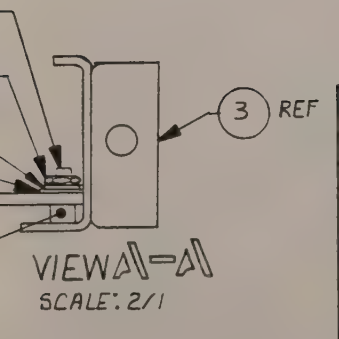

ITEM OR FIND NO.	QTY REQD	S-A STOCK NO.	NOMENCLATURE OR DESCRIPTION	MATL SPEC AND SIZE OR COMPONENT VALUE	IDENTIFYING OR PART NO	FSCM NO.

PARTS LIST

UNLESS OTHERWISE SPECIFIED ALL CAPACITORS ARE IN MICRO-FARADS AND ALL RESISTORS ARE IN OHMS ±10% AND 1/4 WATT

LAST REFERENCE DESIGNATION USED

C CR J E Q R S U

ALL DIMENSIONS ARE IN INCHES UNLESS OTHERWISE SPECIFIED

TOLERANCES
2 PLACE DECIMAL ± .005
3 PLACE DECIMAL ± .02
1 PLACE DECIMAL ± 1

FRACTIONS ± ANGLES ±0° 30'

MAX SURFACE ROUGHNESS 125 ALL MACHINED SURFACES EXCEPT AS NOTED

BREAK SHARP EDGES AND CORNERS .010 MAX

FINISH NONE

CONTRACT NO.

DWN	[illegible]	6-28-89
ENGR	[illegible]	[illegible]
CHK	[illegible]	10-17-89
PROD	[illegible]	11-17-89
APVD	[illegible]	
APVD		

Scientific-Atlanta 3845 Pleasantdale Road Atlanta, Georgia 30340

2 POINT MONITOR ASSY
DS3

SIZE	FSCM NO	DWG NO	REV
C	10110	309243	C

SCALE 1/1 SHEET 1 OF 2

DWG NO 309243 SH 1 REV C

EPROM AND PAL CHART

	ECO NO. 10946	ECO NO. 11003
TOP ASSY-309243	309243A	309243B
SUB-ASSY-309242	→	→
PWB-306243	→	→
U23- 309248 U23 999A	→	→
U24- 309249 U24 8603	→	→
U25- 456200 U25 D575	→	→
U29- 456201 U29 8AB1	→	→
ITEM 2 { U32 456202 0F02 U32 / U33 456202 05A0 U33	ITEM 2 { U32-459030 0IDE U32 / U33-459030 5D04 U33	ITEM 2 { U32-459007 6FAB U32 / U33-459007 3370 U33
		ver. 3.2

APPLICATION			REVISIONS				
QTY REQD	NEXT ASSY	USED ON	ZONE	REV	DESCRIPTION	DATE	APPROVED
1	306200	AT9000		e	SEE SHEET 1 FOR REV		

CO NO. 11351	ECO NO. 11365	ECO NO.	ECO NO.
309243 C	309243 C		
→	—		
→	—		
→	—		
→	—		
→	—		
→	—		
TEM 2 { U32- 458413 B45E U32 / U33- 458413 F9A9 U33	ITEM 2 { U32- 458456 B448 U32 / U33- 458456 F9A9 U33		

ITEM OR FIND NO	QTY REQD	S-A STOCK NO	NOMENCLATURE OR DESCRIPTION	MATL SPEC AND SIZE OR COMPONENT VALUE	IDENTIFYING OR PART NO	FSCM NO

PARTS LIST

UNLESS OTHERWISE SPECIFIED ALL CAPACITORS ARE IN MICROFARADS AND ALL RESISTORS ARE IN OHMS ±10% AND 1/4 WATT

LAST REFERENCE DESIGNATION USED

C D J K
Q R S U

ALL DIMENSIONS ARE IN INCHES UNLESS OTHERWISE SPECIFIED

TOLERANCES
3 PLACE DECIMAL ± .005
2 PLACE DECIMAL ± .01
1 PLACE DECIMAL ± .1

FRACTIONS ± ANGLES ±0°30'

MAX SURFACE ROUGHNESS 125 ALL MACHINED SURFACES EXCEPT AS NOTED

BREAK SHARP EDGES AND CORNERS .010 MAX

FINISH NONE

CONTRACT NO.

DWN [signature] 7-7-89
ENGR
CHK
PROD
APVD
APVD

Scientific-Atlanta 3845 Pleasantdale Road Atlanta, Georgia 30340

ASSEMBLY PWB 2 POINT MONITOR DS3

SIZE C | FSCM NO 10110 | DWG NO 309243 | REV C

SCALE NONE | SHEET 2

DWG NO 309243 | SH 2 | REV C

NOTES:

1. INSTALL AT NEXT ASSEMBLY U32, U33, U23, U24, U25, U29.
2. PLACES C83 UNDER XU30, C84 UNDER XU31.
3. C85 – C92 GOES ON BACK OF BOARD.
4. INSTALL AFTER WAVE SOLDER U1, U3, U4, U5, U8, U9, U12, U13, U14, U17, U27, U28, U30, U31, U34, AND ITEM 4
5. P1 AND P2 POSITIONED ON PINS 1 AND 2 OF J3 AND J10.

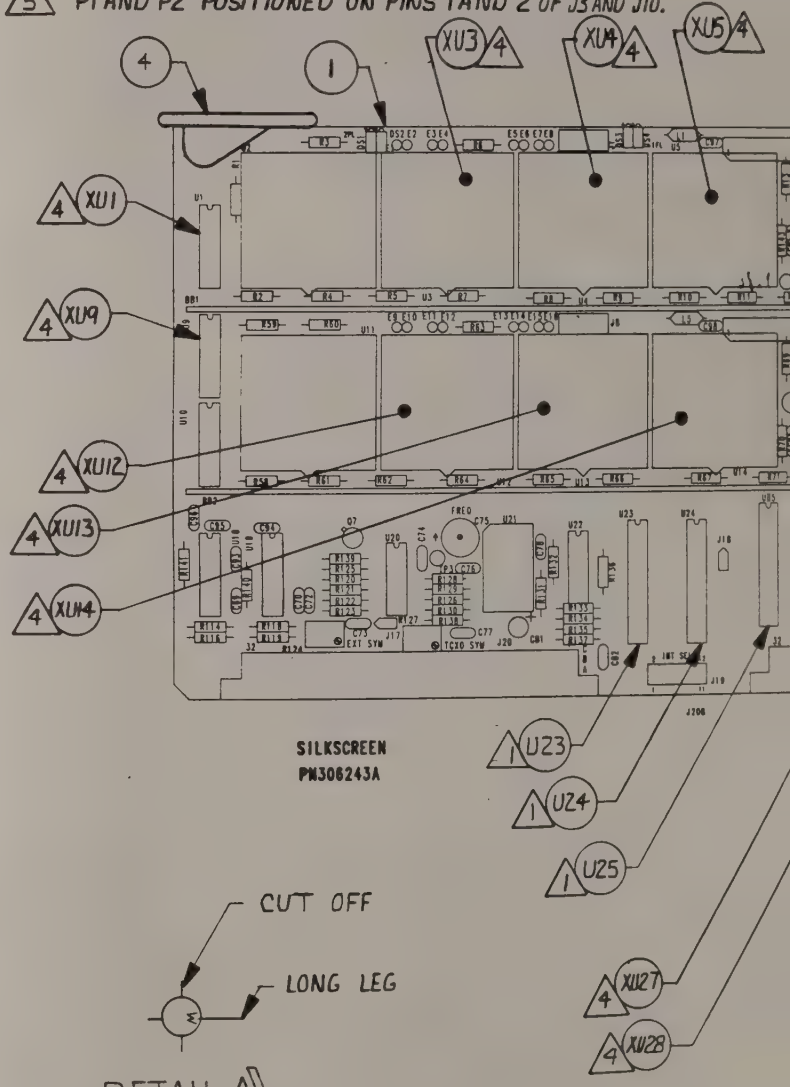

DETAIL A

6. INSTALL LABEL OVER 327980-2X2 DS3 SILKSCREEN.

APPLICATION		
QTY REQD	NEXT ASSY	USED ON
1	309243	AT9000

REVISIONS				
ZONE	REV	DESCRIPTION	DATE	APPROVED
	1	INITIAL RELEASE		
	A	ECO 11003	7/10/90	J. Motaia
	B	INC ECN 13020, 13029, 13039, 13143 AND 13155	6-17-91	

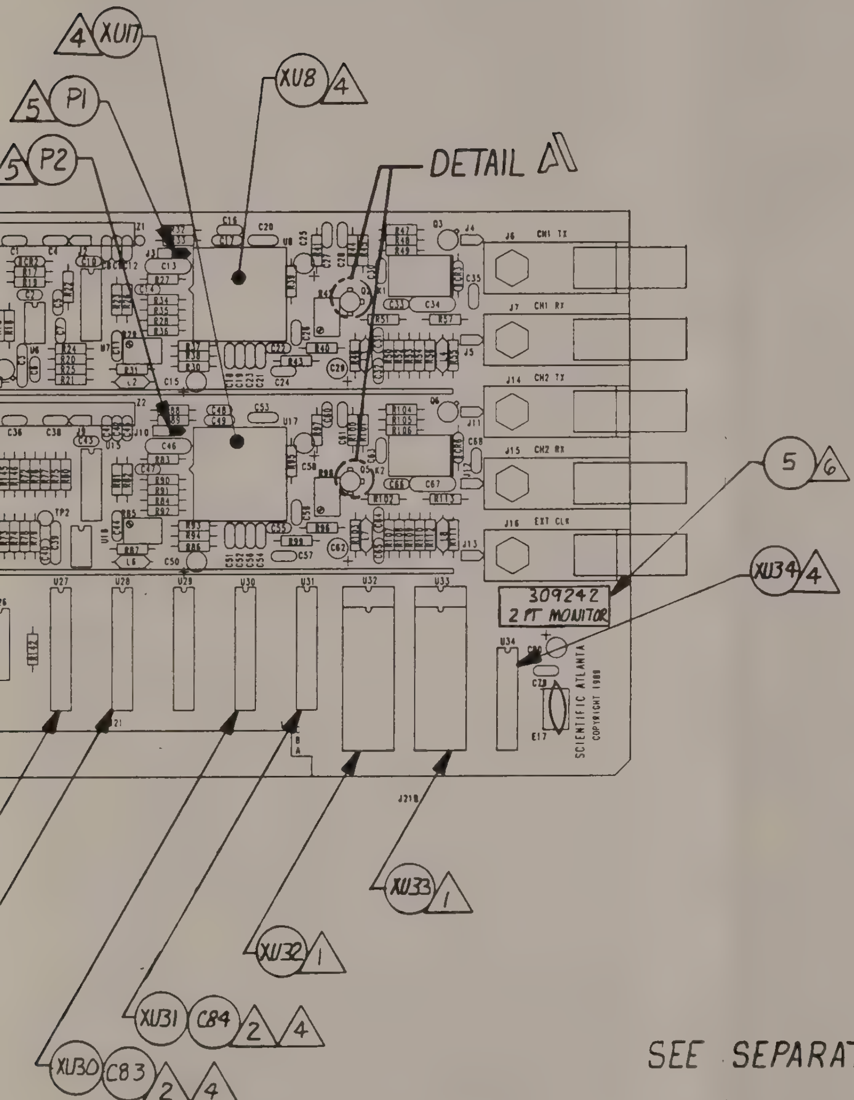

SEE SEPARATE PARTS LIST

ITEM OR FIND NO	QTY REQD	S-A STOCK NO.	NOMENCLATURE OR DESCRIPTION	MATL SPEC AND SIZE OR COMPONENT VALUE	IDENTIFYING OR PART NO	FSCM NO

PARTS LIST

UNLESS OTHERWISE SPECIFIED ALL CAPACITORS ARE IN MICROFARADS AND ALL RESISTORS ARE IN OHMS ±10% AND 1/4 WATT

LAST REFERENCE DESIGNATION USED

ALL DIMENSIONS ARE IN INCHES UNLESS OTHERWISE SPECIFIED

TOLERANCES

NONE

CONTRACT NO	
DWN	6-27-89
ENGR	7/14/89
CHK	7-14-89
PROD	7-18-89
APVD	B. Sprinkle
APVD	

Scientific-Atlanta 3845 Pleasantdale Road Atlanta, Georgia 30340

SUB-ASSY 2 POINT MONITOR DS3

SIZE	FSCM NO	DWG NO	REV
C	10110	309242	B

SCALE 1/1 SHEET 1 OF 2

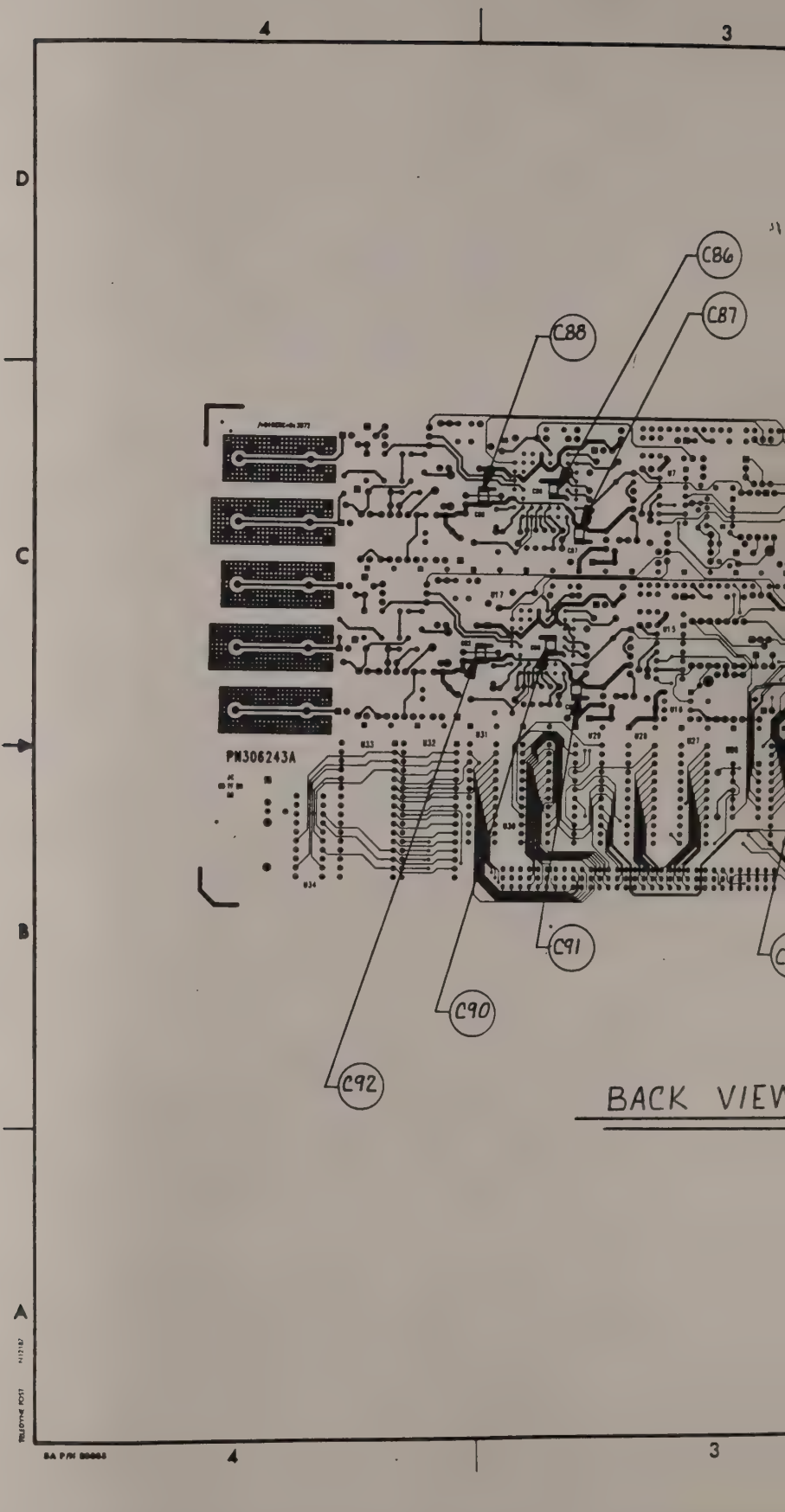
4
3
D
C
B
A
C86
C87
C88
PN306243A
C91
C90
C92
BACK VIEW
4
3

APPLICATION		
QTY REQD	NEXT ASSY	USED ON
1	309243	AT9000

REVISIONS				
ZONE	REV	DESCRIPTION	DATE	APPROVED
	B	SEE SAT1		

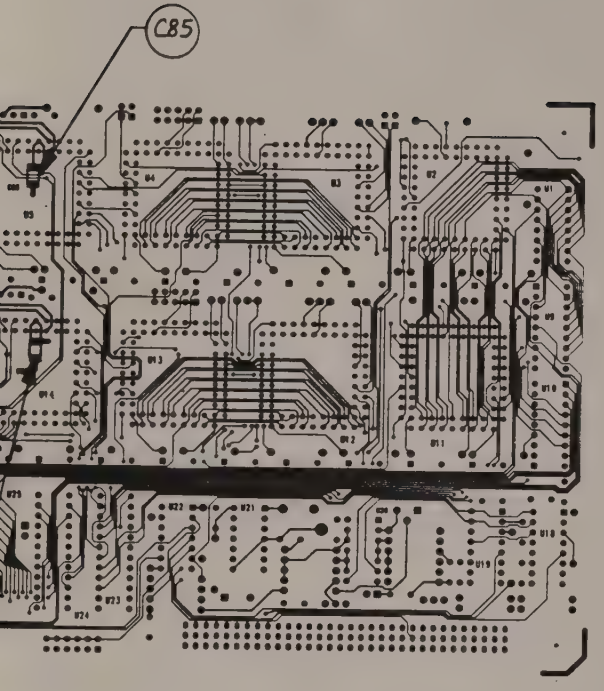

LAYER 4
PN309243A

DWG NO 309242
SH 2
REV B

ITEM OR FIND NO.	QTY REQD	S-A STOCK NO.	NOMENCLATURE OR DESCRIPTION	MATL SPEC AND SIZE OR COMPONENT VALUE	IDENTIFYING OR PART NO	FSCM NO

PARTS LIST

UNLESS OTHERWISE SPECIFIED ALL CAPACITORS ARE IN MICROFARADS AND ALL RESISTORS ARE IN OHMS ±10% AND 1/4 WATT

LAST REFERENCE DESIGNATION USED

C CR J E
Q R S U

ALL DIMENSIONS ARE IN INCHES UNLESS OTHERWISE SPECIFIED

TOLERANCES
3 PLACE DECIMAL ± .005
2 PLACE DECIMAL ± .02
1 PLACE DECIMAL ± .1

FRACTIONS ± ANGLES ±0° 30'

MAX SURFACE ROUGHNESS 125
ALL MACHINED SURFACES EXCEPT AS NOTED

BREAK SHARP EDGES AND CORNERS .010 MAX

FINISH NONE

CONTRACT NO
DWN 6-27-89
ENGR
CHK
PROD
APVD
APVD

Scientific-Atlanta
3845 Pleasantdale Road
Atlanta, Georgia 30340

2 POINT MONITOR
DS3

SIZE	FSCM NO.	DWG NO.	REV
C	10110	309242	B

SCALE 1/1 SHEET 2

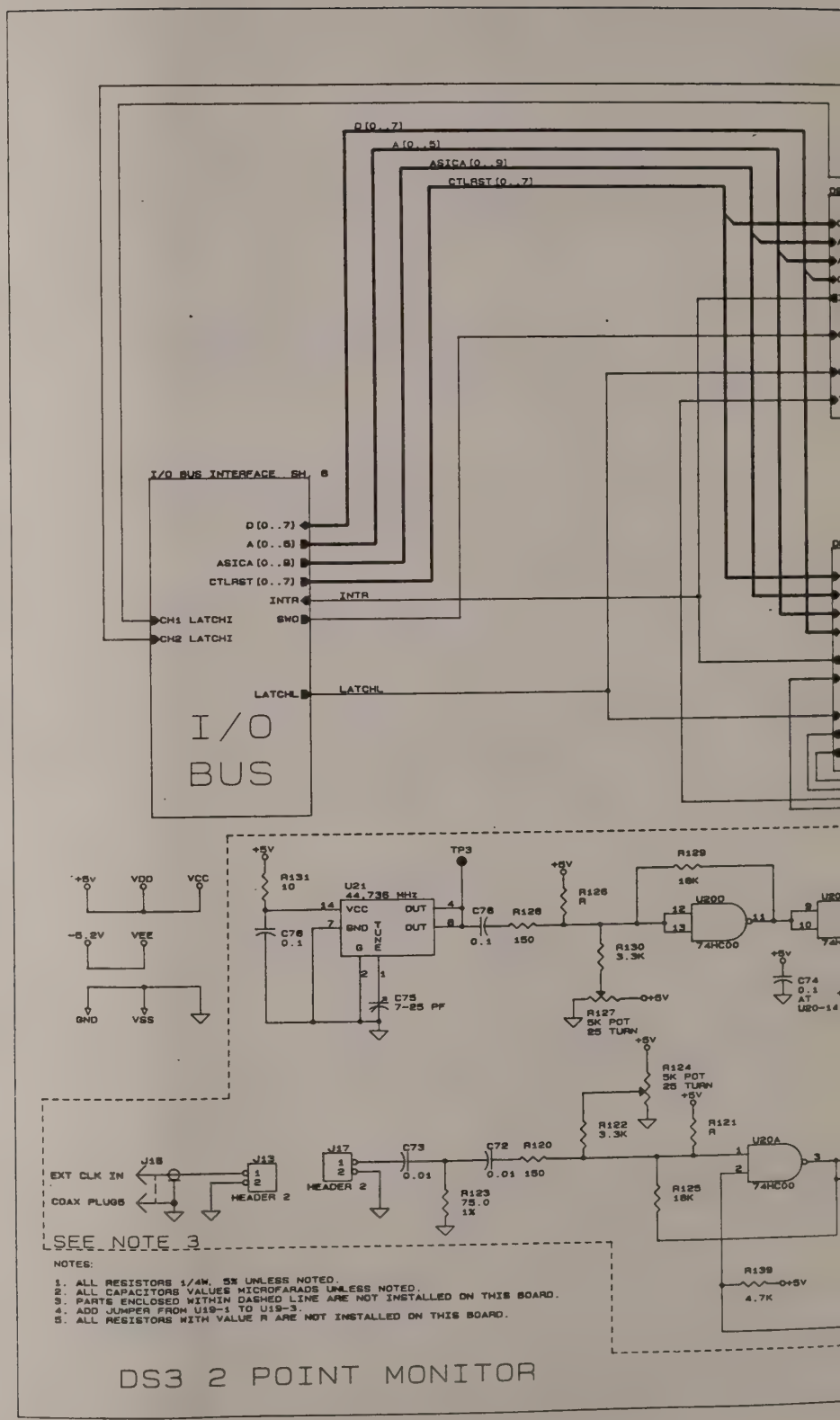

DS3 2 POINT MONITOR

APPLICATION			REVISIONS				
QTY REQD	NEXT ASSY	USED ON	ZONE	REV	DESCRIPTION	DATE	APPROVED
0	A309242	AT2000		A	INC ECR 13029	7/22/91	

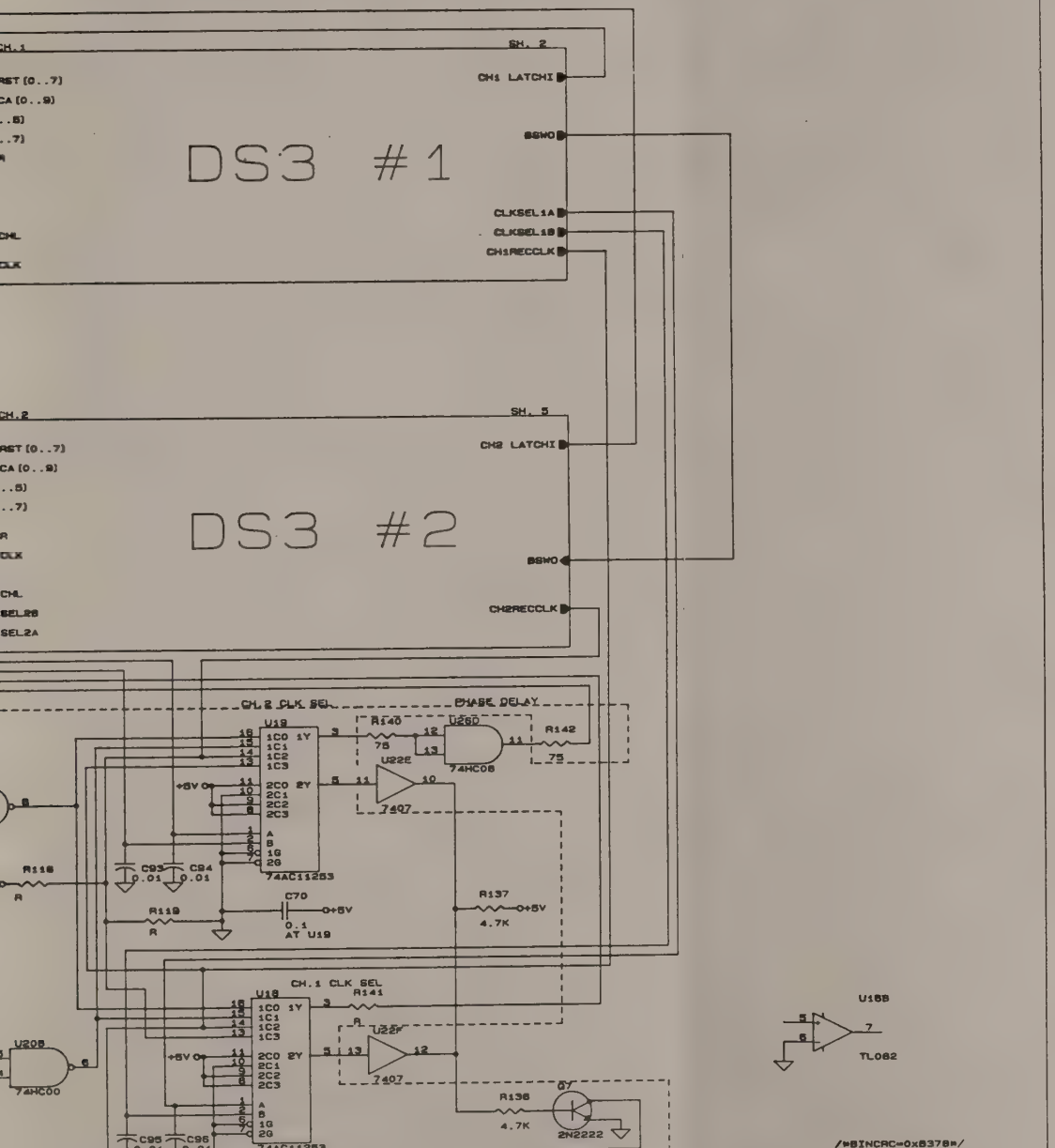

DWN	T.FABER	5-4-89
ENGR		7/12/89
CHK		7-12-89
PROD		7.7
APVD		7-19-89
SOURCE	OrCAD	10110 FSCH NO.

SCIENTIFIC-ATLANTA, INC
INSTRUMENTATION DIVISION
4388 SHACKLEFORD RD.
NORCROSS, GA 30093

Title: DS3 2 POINT MONITOR: TOP LEVEL

Size	Document Number	REV
C	309241	A

Date: June 19, 1989 Sheet 1 of 10

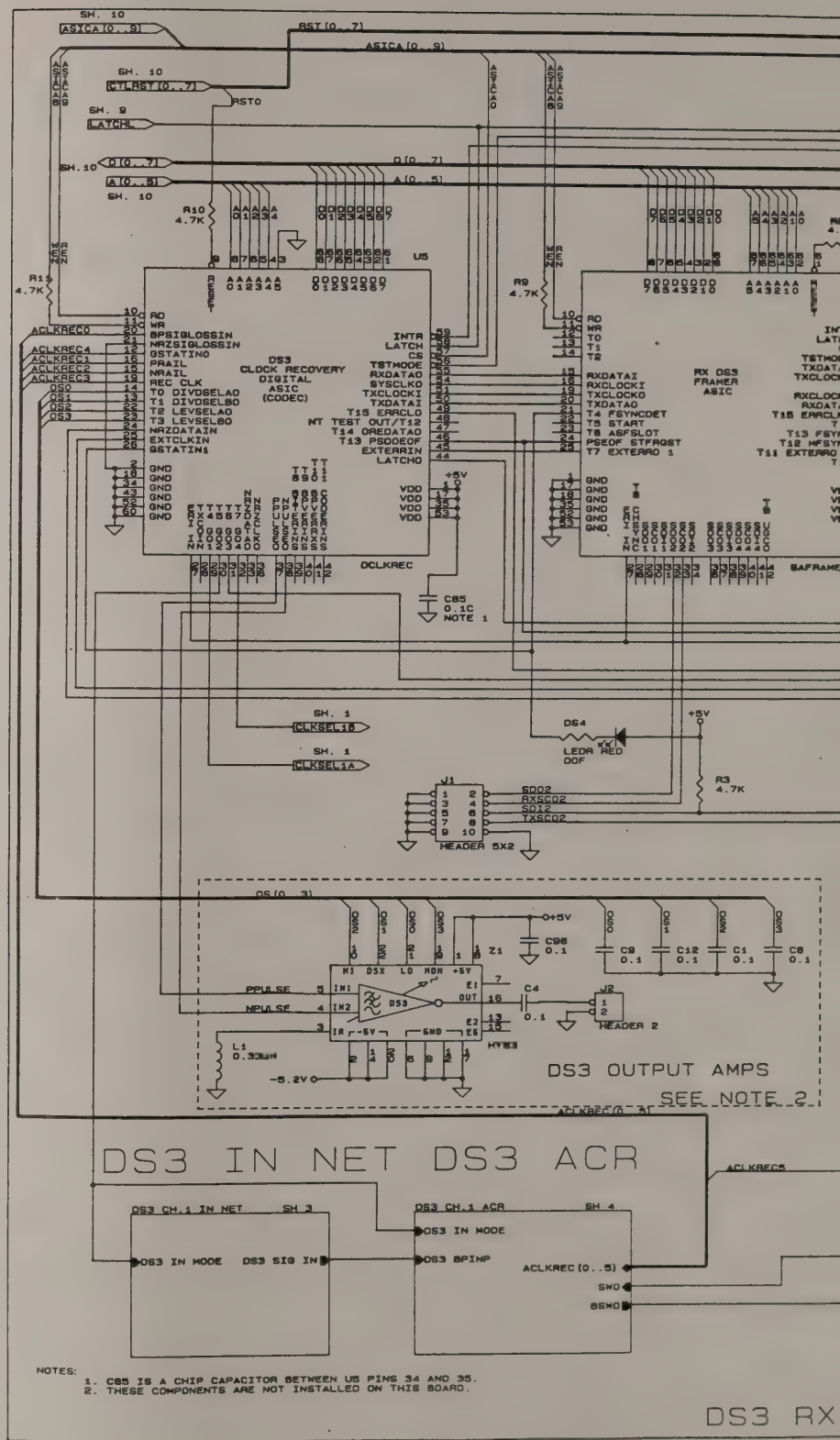
DS3 IN NET DS3 ACR
DS3 OUTPUT AMPS
SEE NOTE 2
DS3 CH.1 IN NET
DS3 CH.1 ACR
NOTES:
1. C85 IS A CHIP CAPACITOR BETWEEN U5 PINS 34 AND 35.
2. THESE COMPONENTS ARE NOT INSTALLED ON THIS BOARD.
DS3 RX

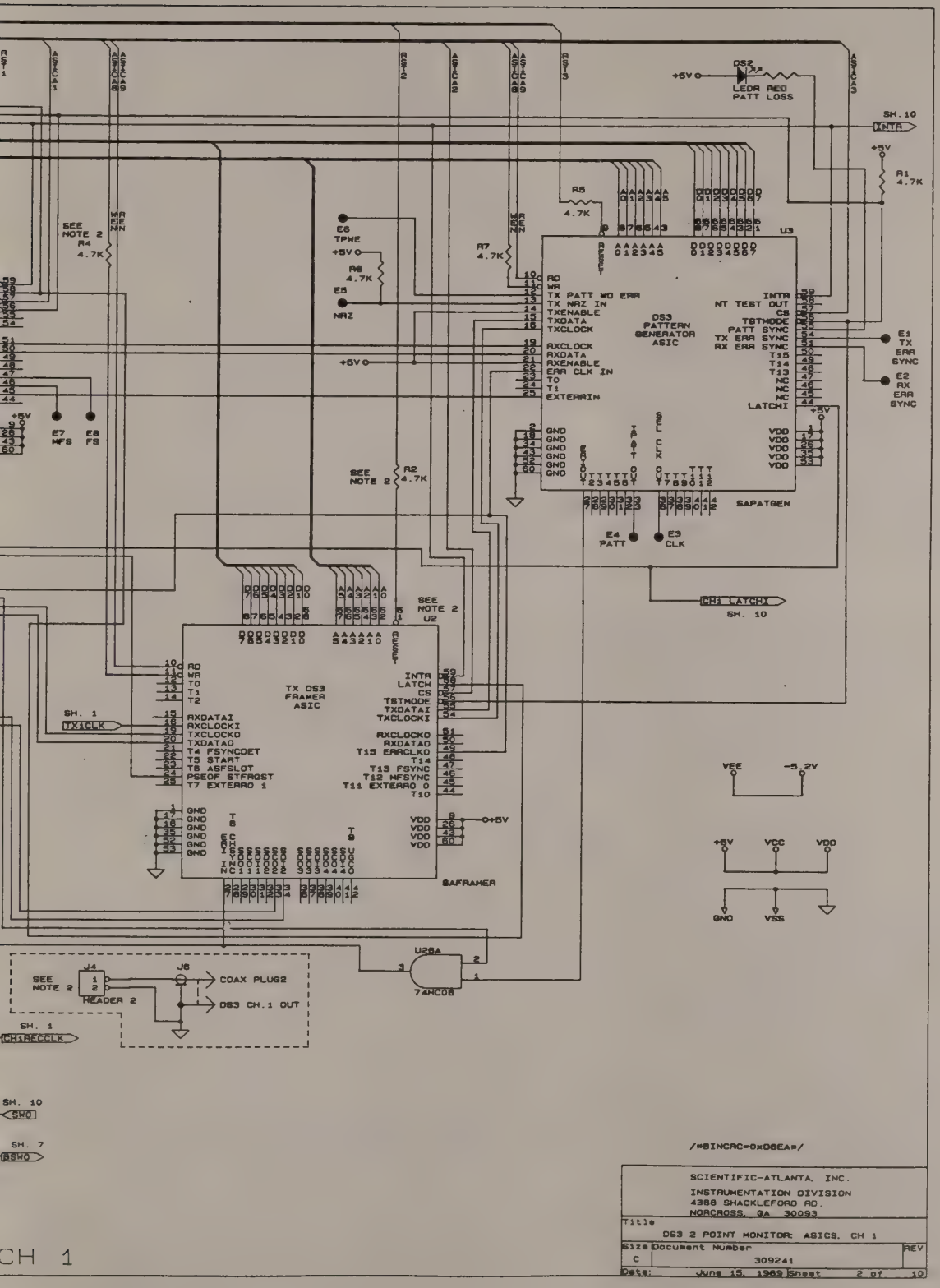
DS2
LEDR RED
PATT LOSS
+5V
SH. 10
XINTA
R1
4.7K
R5
4.7K
R7
4.7K
R6
4.7K
R4
4.7K
SEE
NOTE 2
E6
TPNE
E5
NRZ
U3
DS3
PATTERN
GENERATOR
ASIC
SAPATGEN
E1
TX
ERR
SYNC
E2
RX
ERR
SYNC
E4
PATT
E3
CLK
E7
MFS
E8
FS
R2
4.7K
CH1 LATCHI
SH. 10
U2
TX DS3
FRAMER
ASIC
SAFRAMER
SH. 1
TX1CLK
VEE
-5.2V
VCC
VDD
GND
VSS
U28A
74HC08
J4
HEADER 2
J8
COAX PLUG2
DS3 CH.1 OUT
SH. 1
CH1RECCLK
SH. 10
SWO
SH. 7
RSWO
/*$INCRC=0xD8EA*/
SCIENTIFIC-ATLANTA, INC.
INSTRUMENTATION DIVISION
4386 SHACKLEFORD RD.
NORCROSS, GA 30093
Title
DS3 2 POINT MONITOR: ASICS, CH 1
Size
C
Document Number
309241
REV
Date: June 15, 1989
Sheet 2 of 10
CH 1

DS3 INPUT

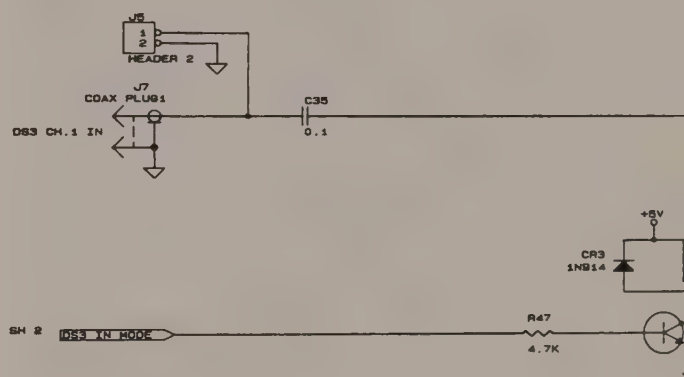
J5
1
2
HEADER 2
J7
COAX PLUG1
DS3 CH.1 IN
C35
0.1
+5V
CR3
1N914
SW 2
DS3 IN MODE
R47
4.7K

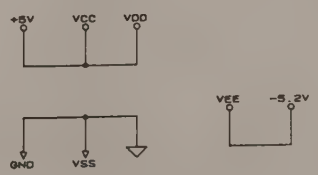
+5V
VCC
VDD
GND
VSS
VEE
-5.2V

A | SEE SHEET 1.

DSX NETWORK CH 1

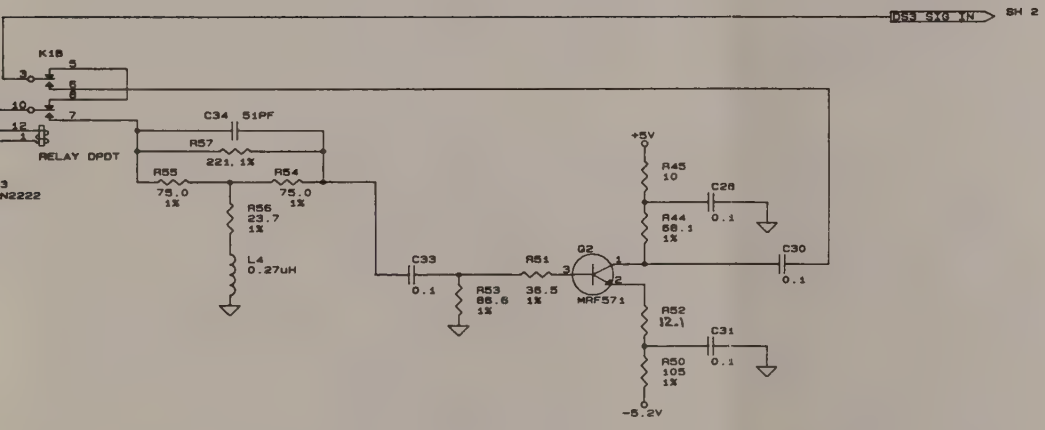

/*$INCAC=0xFF02*/

SCIENTIFIC-ATLANTA, INC. INSTRUMENTATION DIVISION 4386 SHACKLEFORD RD. NORCROSS, GA 30093		
Title: DS3 2 PT MONITOR: INPUT DSX NETWORK, CH 1		
Size: C	Document Number: 309241	REV: A
Date: May 10, 1989	Sheet 3 of 10	

DS3 ANALOG CLOCK RECOVERY

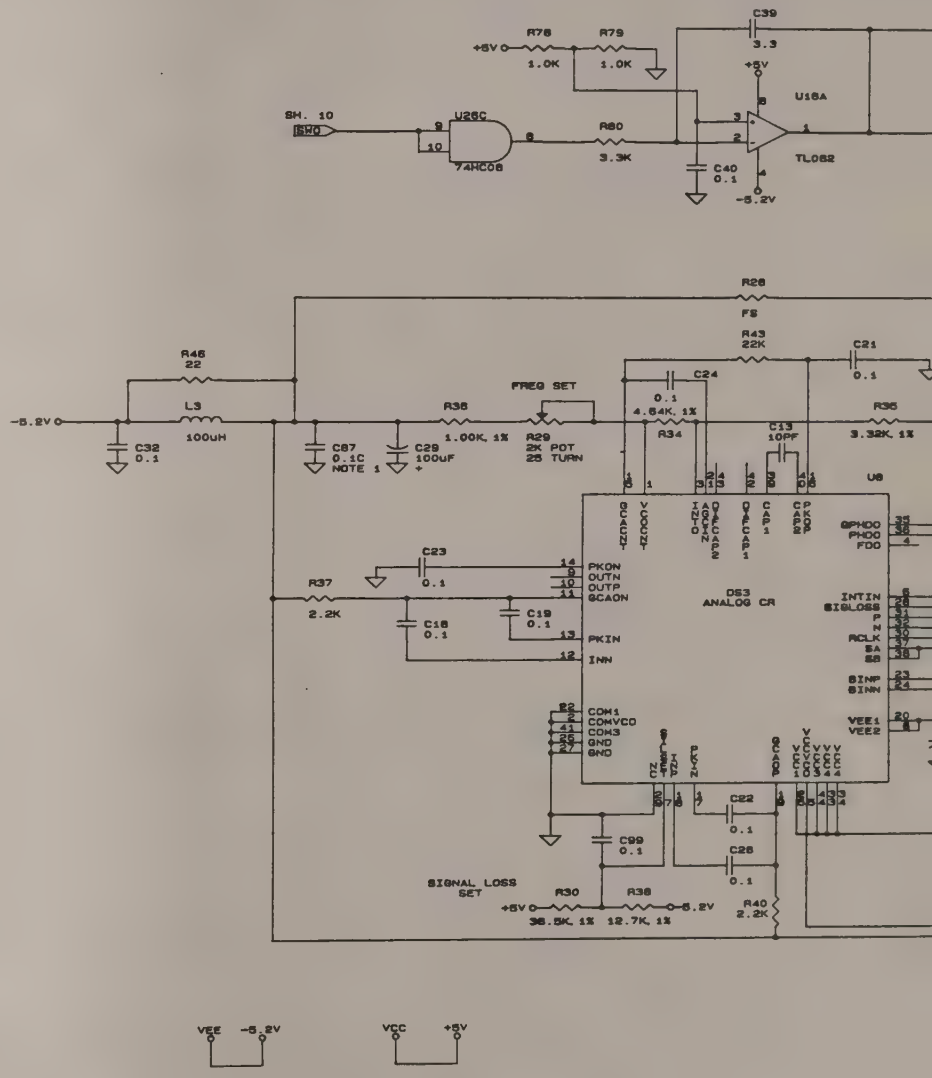

NOTES:

1. C86, C87, C88 ARE CHIP CAPACITORS.

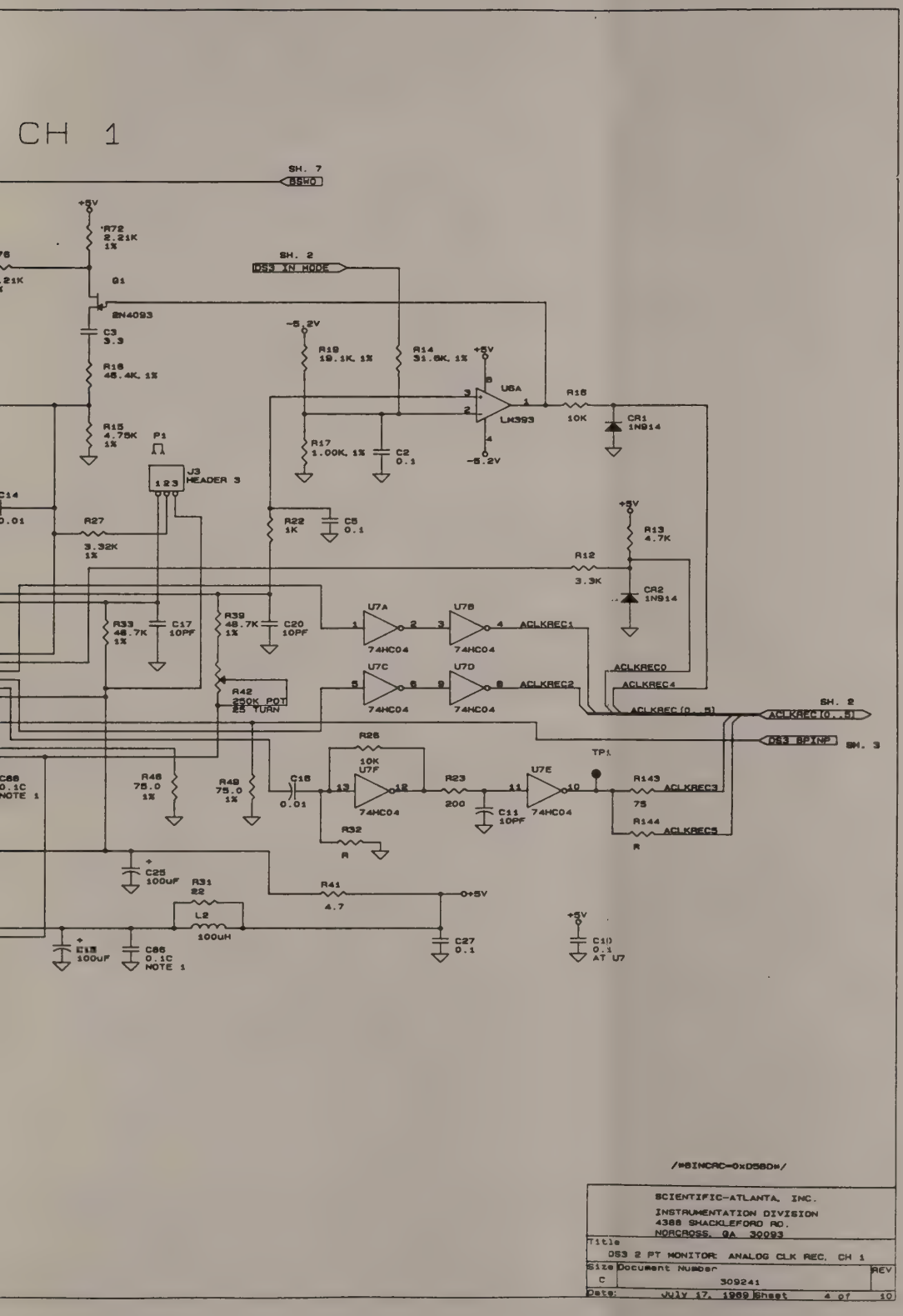
CH 1
SH. 7
BSW0
+5V
R72
2.21K
1%
SH. 2
DS3 XN MODE
Q1
2N4093
C3
3.3
R18
48.4K, 1%
R15
4.75K
1%
P1
J3
HEADER 3
-5.2V
R19
19.1K, 1%
R14
31.6K, 1%
U6A
LM393
R16
10K
CR1
1N914
R17
1.00K, 1%
C2
0.1
R27
3.32K
1%
R22
1K
C5
0.1
R13
4.7K
R12
3.3K
CR2
1N914
R33
48.7K
1%
C17
10PF
R39
48.7K
1%
C20
10PF
U7A
U7B
74HC04
ACLKREC1
U7C
U7D
ACLKREC0
ACLKREC4
ACLKREC2
R42
220K POT
25 TURN
ACLKREC[0..5]
SH. 2
DS3 SPYN2
SH. 3
TP1
R26
10K
U7F
R23
200
U7E
R143
75
ACLKREC3
R144
R
ACLKREC5
C11
10PF
R32
R
R46
75.0
1%
R49
75.0
1%
C16
0.01
C25
100uF
R31
22
L2
100uH
R41
4.7
C27
0.1
C10
0.1
AT U7
/*$INCRC=0xD58D*/
SCIENTIFIC-ATLANTA, INC.
INSTRUMENTATION DIVISION
4386 SHACKLEFORD RD.
NORCROSS, GA 30093
Title
DS3 2 PT MONITOR ANALOG CLK REC. CH 1
Size C
Document Number
309241
REV
Date: July 17, 1999 Sheet 4 of 10

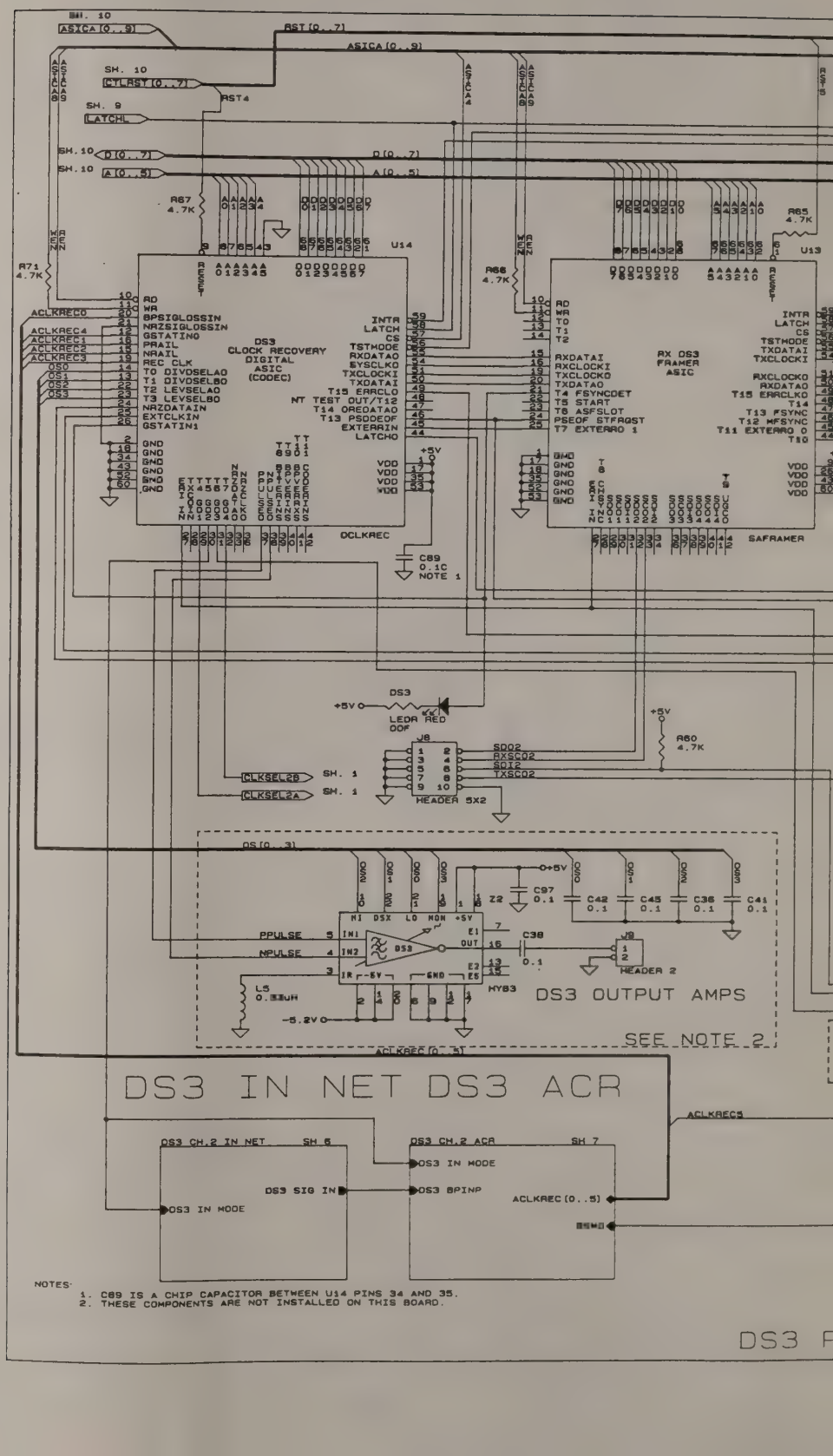
DS3 IN NET DS3 ACR
DS3 OUTPUT AMPS
SEE NOTE 2
DS3 CLOCK RECOVERY DIGITAL ASIC (CODEC)
RX DS3 FRAMER ASIC
SAFRAMER
HEADER 5X2
HEADER 2
DS3 CH.2 IN NET SH 6
DS3 CH.2 ACR SH 7
DS3 IN MODE
DS3 SIG IN
DS3 BPINP
ACLKREC[0..5]
ACLKREC5
NOTES:
1. C89 IS A CHIP CAPACITOR BETWEEN U14 PINS 34 AND 35.
2. THESE COMPONENTS ARE NOT INSTALLED ON THIS BOARD.

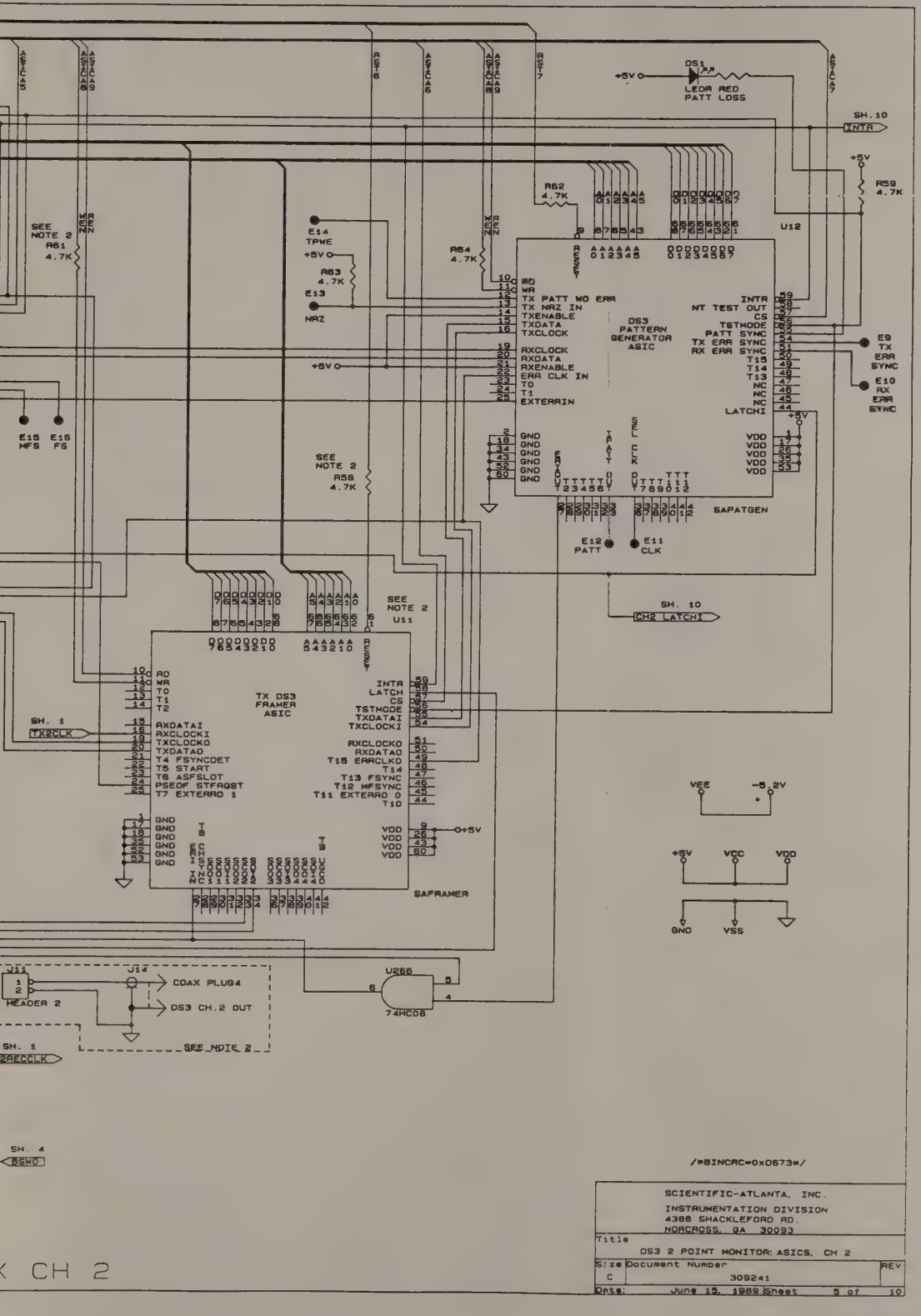
DS1
LEDR RED
PATT LOSS
+5V
SH. 10
XNTR
R59
4.7K
R62
4.7K
R64
4.7K
R63
4.7K
R61
4.7K
R58
4.7K
SEE
NOTE 2
E14
TPWE
E13
NRZ
U12
DS3
PATTERN
GENERATOR
ASIC
INTR
NT TEST OUT
CS
TSTMODE
PATT SYNC
TX ERR SYNC
RX ERR SYNC
T15
T14
T13
NC
NC
LATCHI
E9
TX
ERR
SYNC
E10
RX
ERR
SYNC
E15
MFS
E16
FS
SAPATGEN
E12
PATT
E11
CLK
SH. 10
CH2 LATCHI
U11
TX DS3
FRAMER
ASIC
SAFRAMER
SH. 1
TX2CLK
VEE
-5.2V
VCC
VDD
GND
VSS
J11
HEADER 2
J14
COAX PLUG4
DS3 CH.2 OUT
U26B
74HC08
SEE NOTE 2
SH. 1
2RECCLK
SH. 4
BSWO
/*SINCRC=0x0673*/
SCIENTIFIC-ATLANTA, INC.
INSTRUMENTATION DIVISION
4388 SHACKLEFORD RD.
NORCROSS, GA 30093
Title
DS3 2 POINT MONITOR: ASICS, CH 2
Size
C
Document Number
309241
REV
Date: June 15, 1989 Sheet 5 of 10
CH 2

DS3 INPUT DS

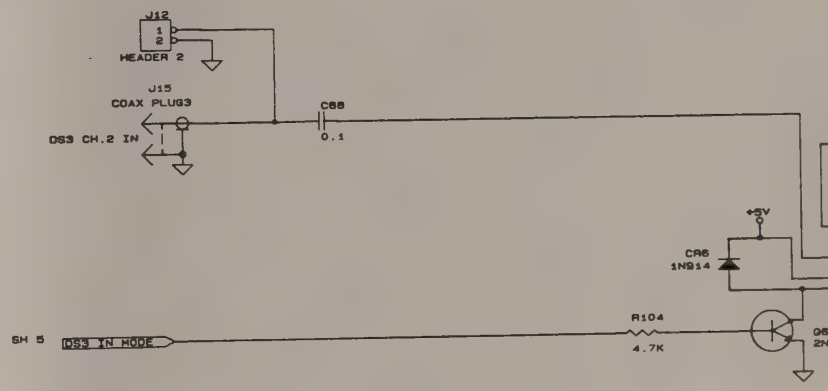
J12
1
2
HEADER 2
J15
COAX PLUG3
DS3 CH.2 IN
C68
0.1
+5V
CR6
1N914
SH 5
DS3 IN MODE
R104
4.7K

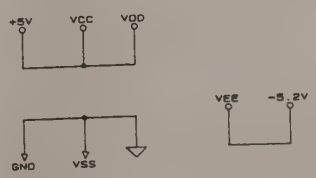
+5V
VCC
VDD
GND
VSS
VEE
-5.2V

X NETWORK CH 2

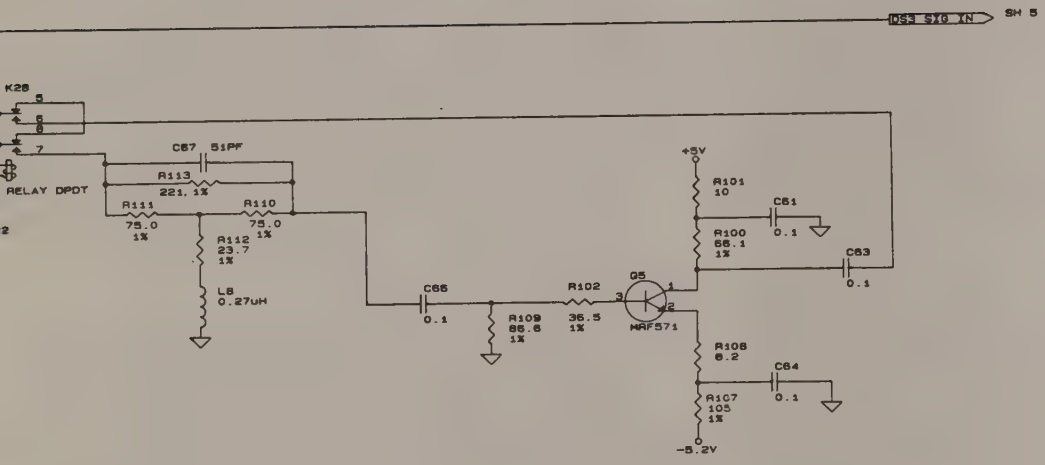

/*$INCRC=0xACBA*/

SCIENTIFIC-ATLANTA, INC. INSTRUMENTATION DIVISION 4388 SHACKLEFORD RD. NORCROSS, GA 30093		
Title DS3 2 PT MONITOR: INPUT DSX NETWORK, CH 2		
Size C	Document Number 309241	REV
Date: May 10, 1999	Sheet 6 of 10	

DS3 ANALOG CLOCK REC

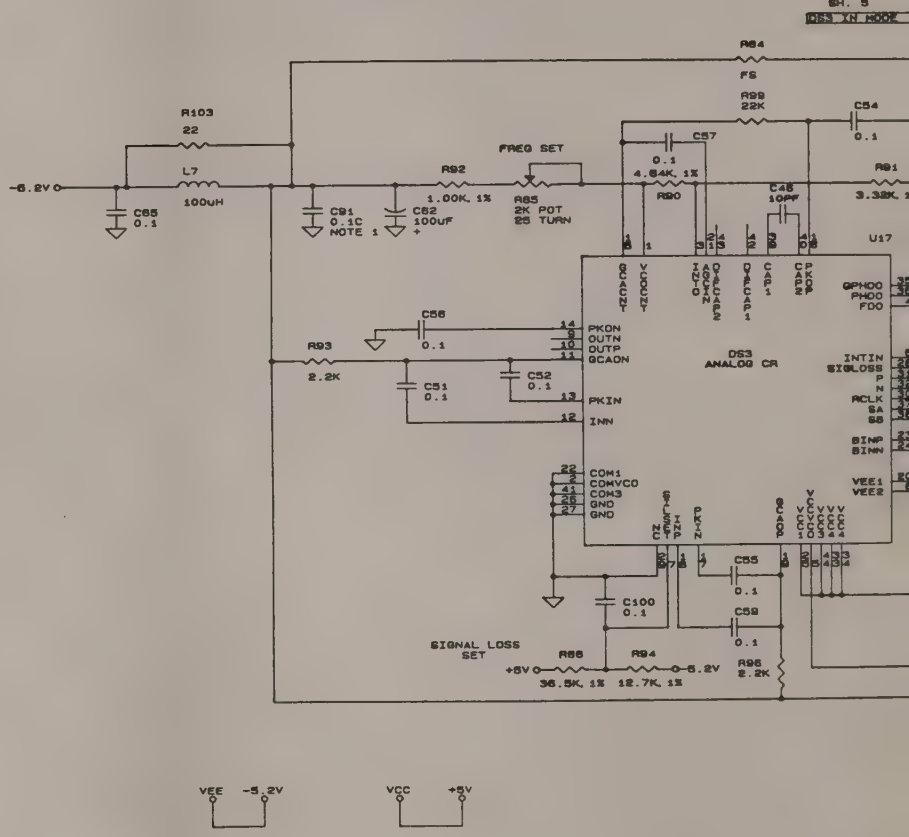

NOTES:

1. C90, C91, C92 ARE CHIP CAPACITORS.

OVERY CH 2

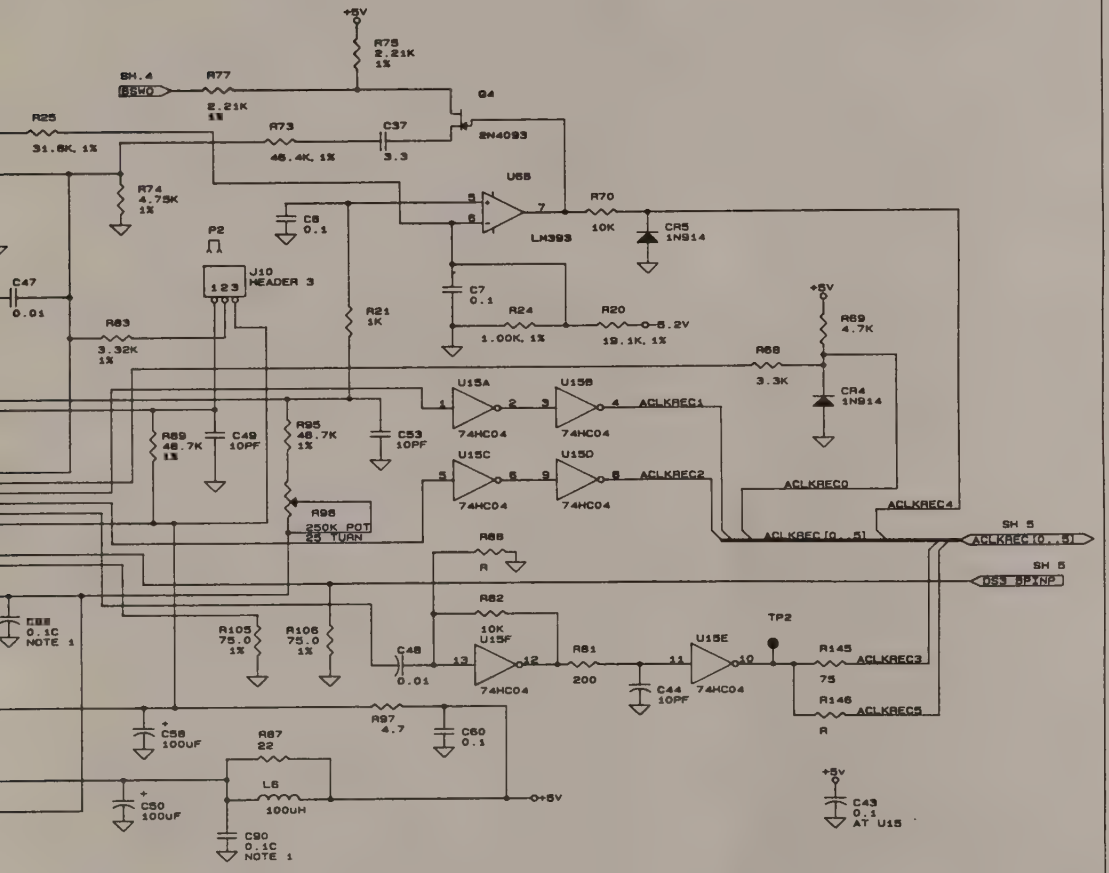

/*$INCRC=0x5053*/

SCIENTIFIC-ATLANTA, INC. INSTRUMENTATION DIVISION 4386 SHACKLEFORD RD. NORCROSS, GA 30093		
Title: OS3 2 PT MONITOR: ANALOG CLK REC. CH 2		
Size: C	Document Number: 309241	REV
Date: July 17, 1989	Sheet 7 of 10	

2 POINT MONI

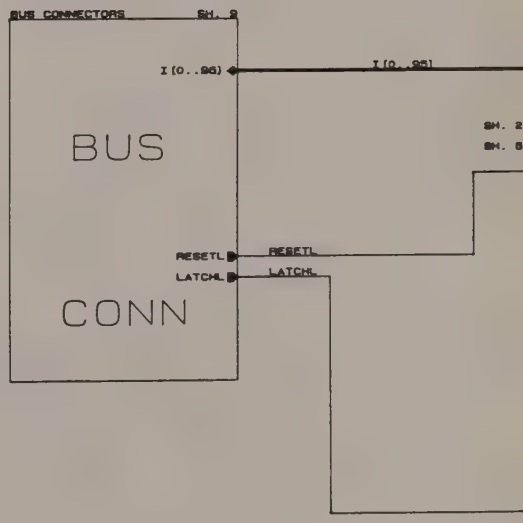
BUS CONNECTORS
SH. 2
I(0..95)
I(0..95)
BUS
SH. 2
SH. 8
RESETL
LATCHL
RESETL
LATCHL
CONN

TOR BUS INTERFACE

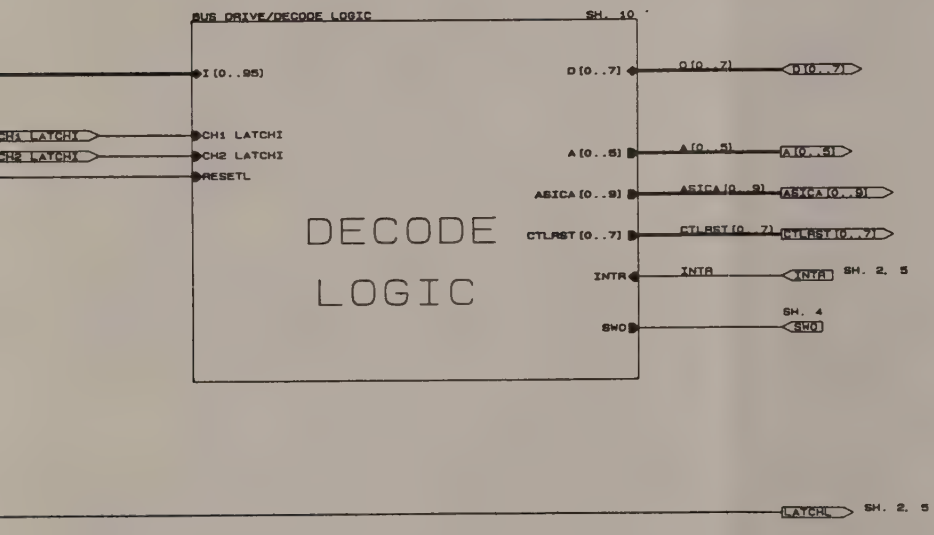

/*$INCRC=0x3813*/

SCIENTIFIC-ATLANTA, INC. INSTRUMENTATION DIVISION 4386 SHACKLEFORD RD. NORCROSS, GA 30093		
Title DS3 2 PT MONITOR: BUS INTERFACE INTERCONNECT		
Size C	Document Number 309241	REV
Date: June 15, 1999	Sheet 8 of 10	

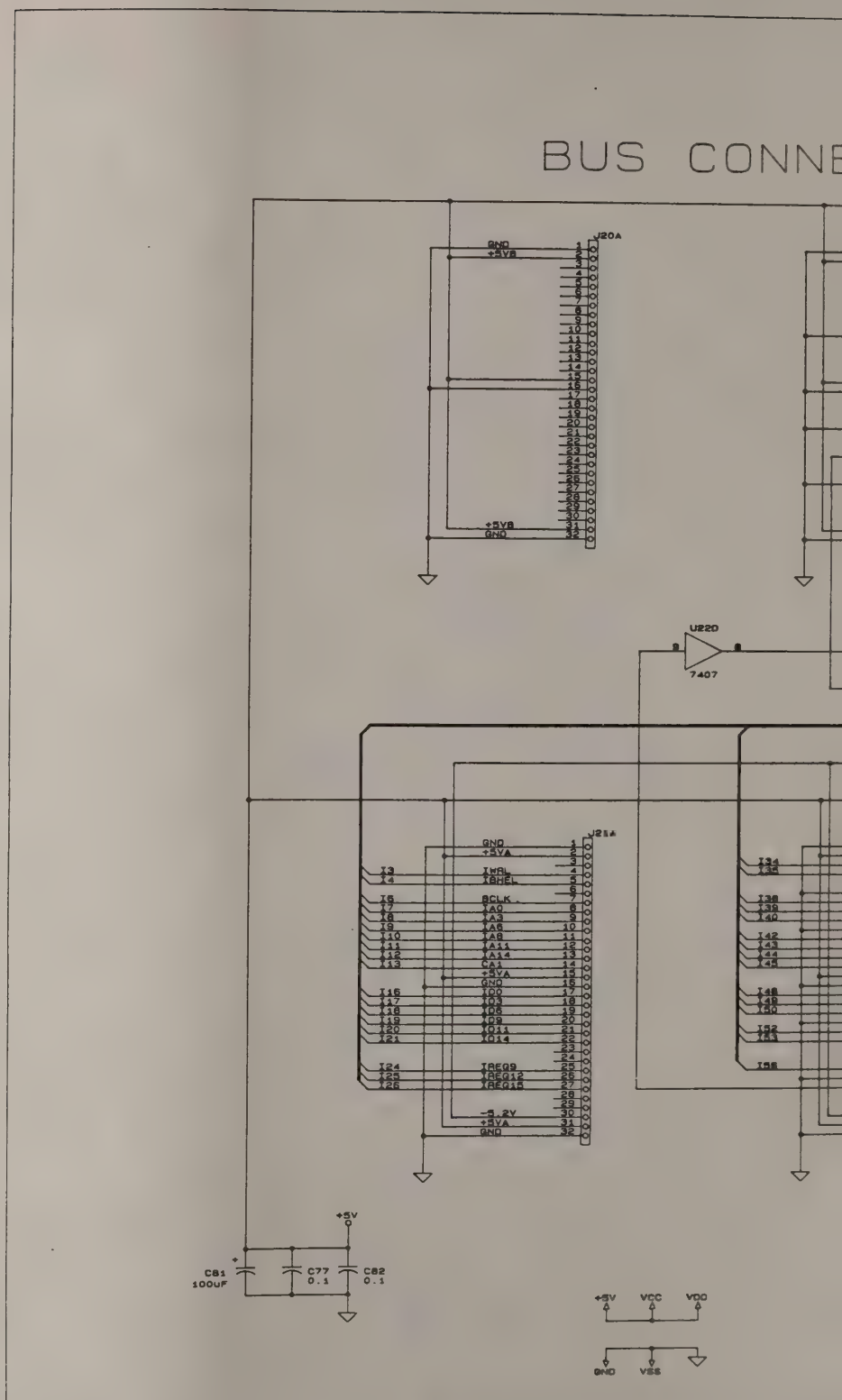
BUS CONNE
J20A
GND
+5VB
+5VB
GND
U22D
7407
J21A
GND
+5VA
I3
I4
IWRL
IBHEL
I5
I7
I8
I9
I10
I11
I12
I13
BCLK
IA0
IA3
IA8
IA9
IA11
IA14
CA1
+5VA
GND
I16
I17
I18
I19
I20
I21
IO0
IO3
IO5
IO9
IO11
IO14
I24
I25
I26
IREQ9
IREQ12
IREQ15
-5.2V
+5VA
GND
+5V
C81
100uF
C77
0.1
C82
0.1
+5V
VCC
VDD
GND
VSS

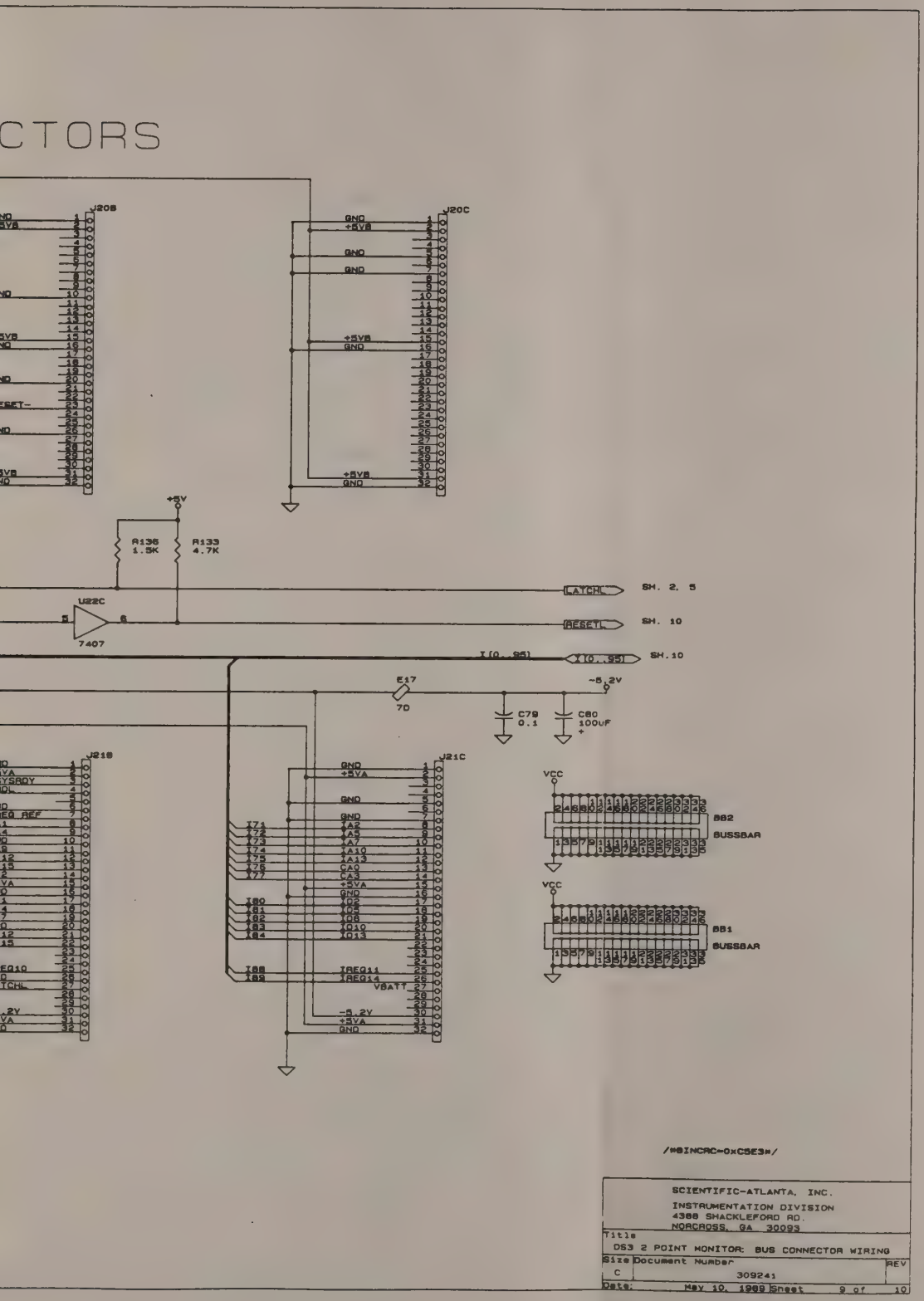
CTORS
J20B
J20C
GND
+5VB
+5V
R136
1.5K
R133
4.7K
U22C
7407
LATCHL
SH. 2, 5
RESETL
SH. 10
I(0..9)
I(0..9)
SH.10
E17
7D
~5.2V
C79
0.1
C80
100uF
J21B
J21C
+5VA
CA3
IREQ11
IREQ14
VBATT
-5.2V
VCC
BB2
BUSSBAR
BB1
BUSSBAR
/*$INCRC=0xC5E3*/
SCIENTIFIC-ATLANTA, INC.
INSTRUMENTATION DIVISION
4386 SHACKLEFORD RD.
NORCROSS, GA 30093
Title
DS3 2 POINT MONITOR: BUS CONNECTOR WIRING
Size
C
Document Number
309241
REV
Date: May 10, 1989 Sheet 9 of 10

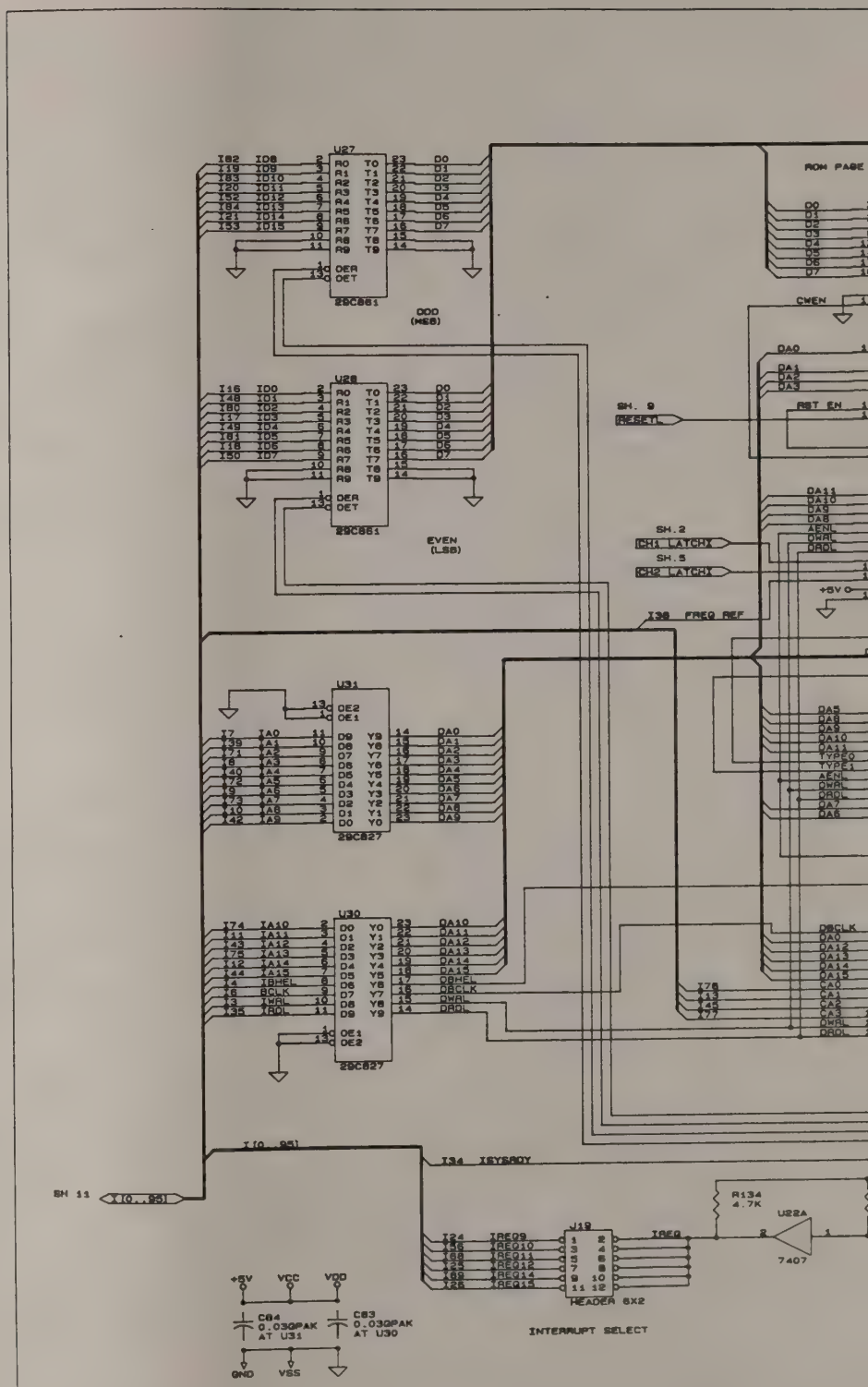

DS3 2 POINT MONITOR BUS INTER

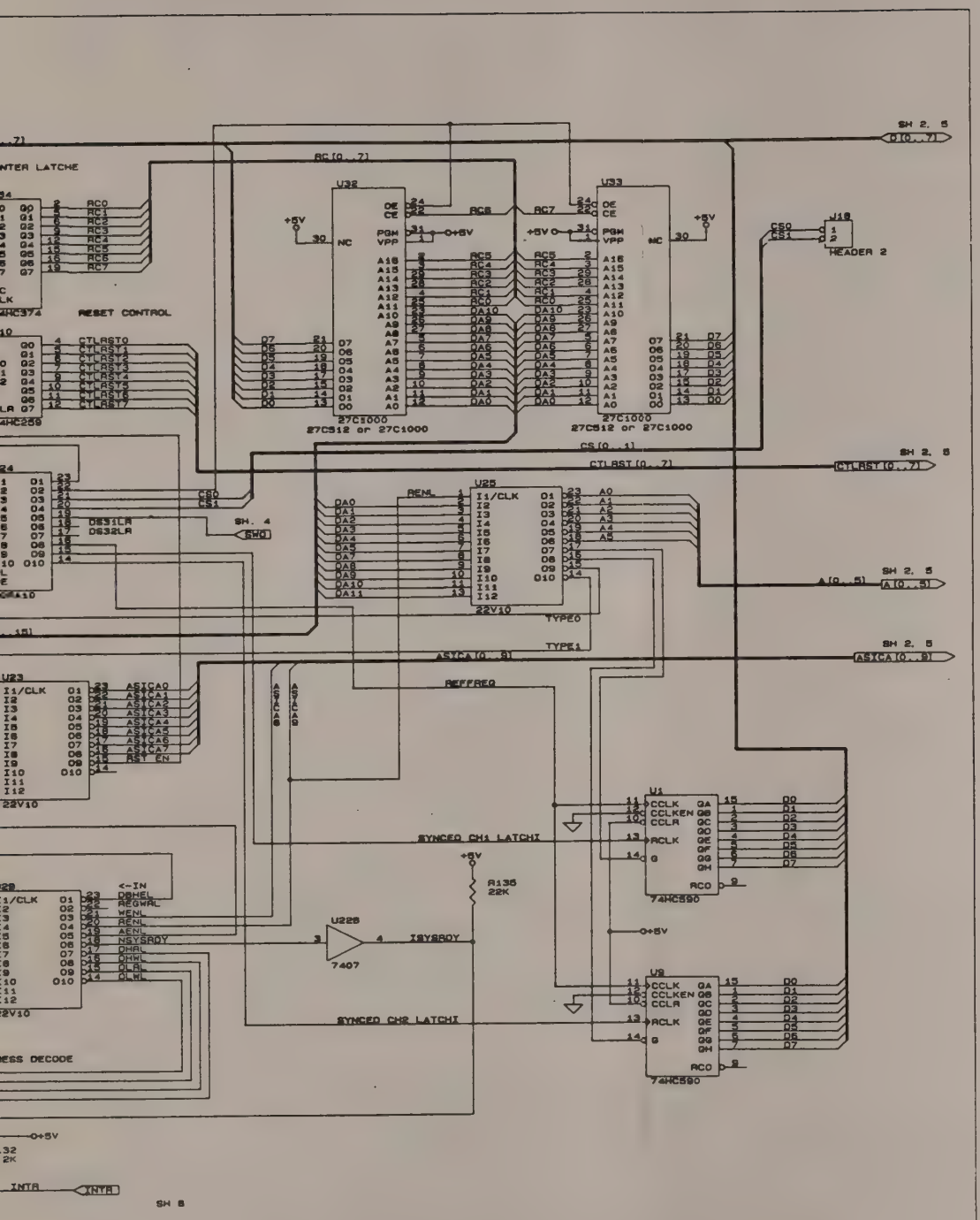
SH 2, 5
D[0..7]
RC[0..7]
U32
U33
27C1000
27C512 or 27C1000
RESET CONTROL
CTLRST[0..7]
CS[0..1]
J18
HEADER 2
U25
22V10
TYPE0
TYPE1
ASYCA[0..8]
REFFREQ
SYNCED CH1 LATCH
SYNCED CH2 LATCH
U1
U9
74HC590
U22B
7407
R135
22K
INTA
SH 8
/*SINCRC=0x29AF*/
SCIENTIFIC-ATLANTA, INC.
INSTRUMENTATION DIVISION
4386 SHACKLEFORD RD.
NORCROSS, GA 30093
D63 2 POINT MONITOR: BUS INTERFACE
309241
June 15, 1989
10 of 10

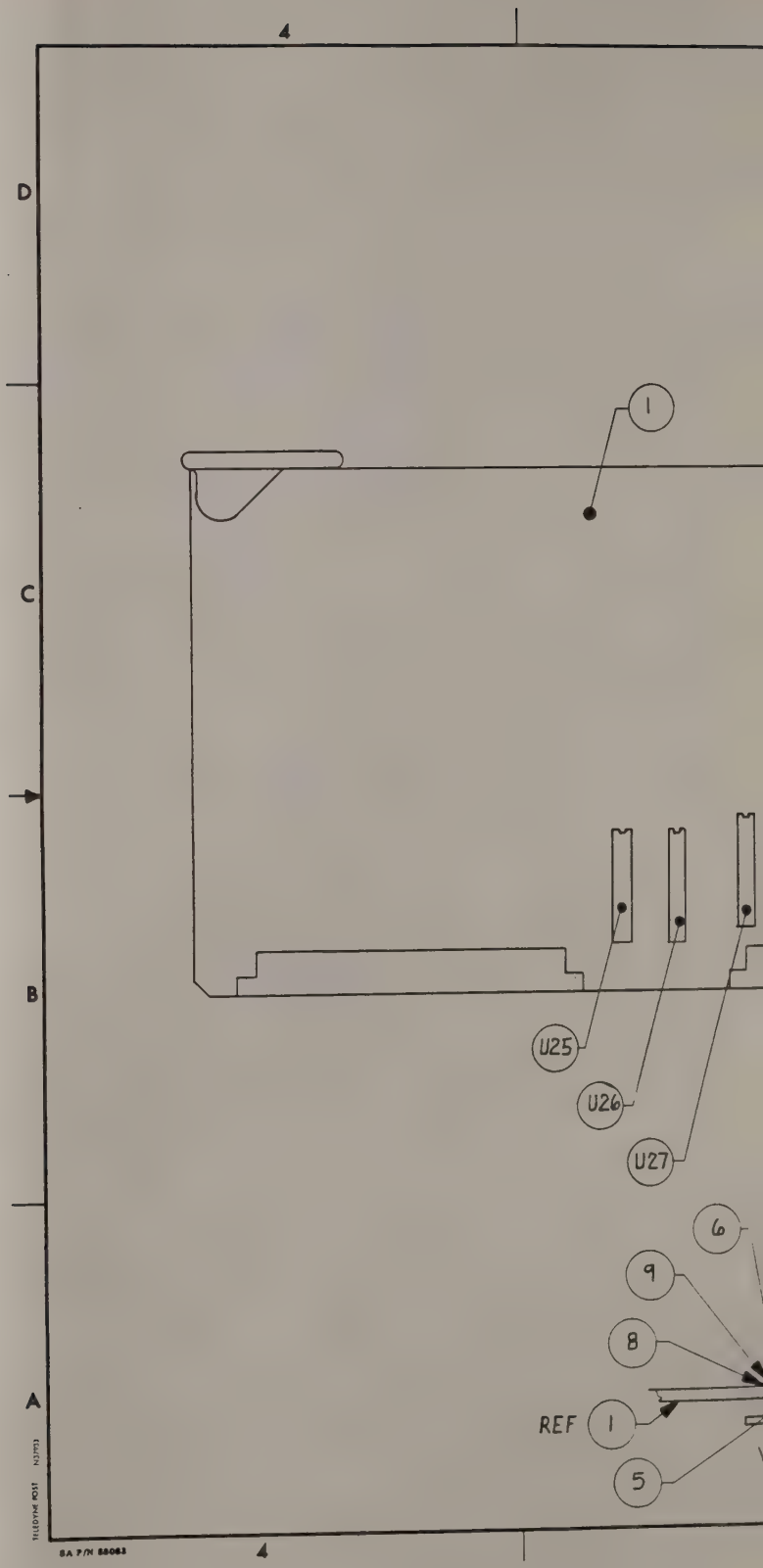
4
D
C
B
A
1
U25
U26
U27
6
9
8
REF
1
5
4

APPLICATION		
QTY REQD	NEXT ASSY	USED ON
1	306200	AT9000

REVISIONS				
ZONE	REV	DESCRIPTION	DATE	APPROVED
	A	INC ECO 10937	1/4/90	J.M. [illegible]
	B	ECO 10996	3/14/90	J.M. [illegible]
	C	ECO 11003, 11174	7/10/90	J.M. [illegible]
	D	ECO 12900, 12908	5/14/91	J.M. [illegible]
	E	INC ECR 15029 [illegible]	6/28/91	J.M. [illegible]

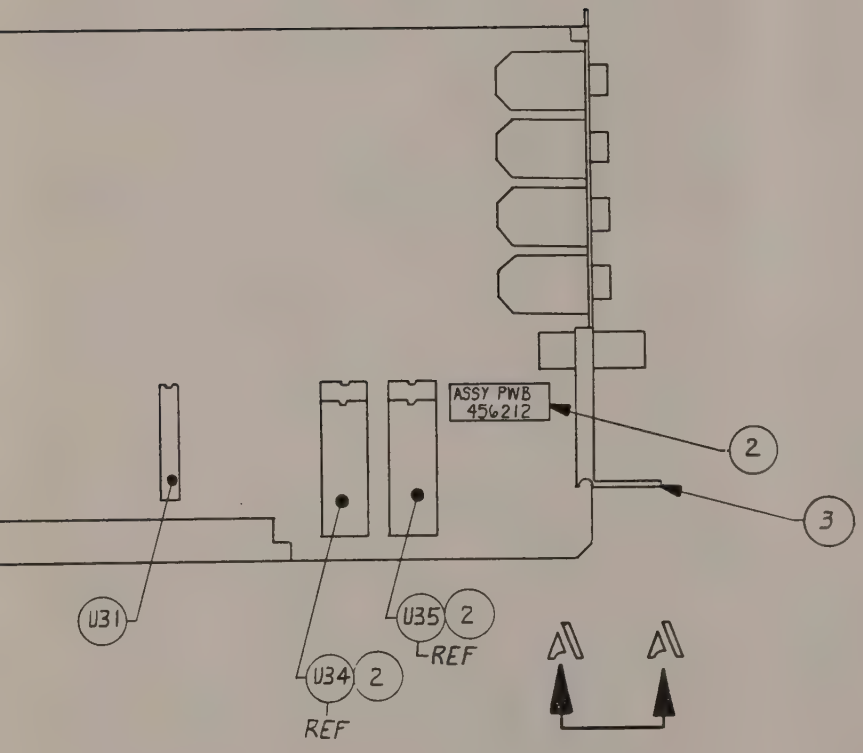

SEE SEPARATE PARTS LIST

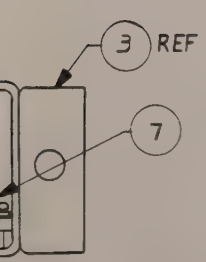

EW
ALE: 2/1

ITEM OR FIND NO.	QTY REQD	S-A STOCK NO.	NOMENCLATURE OR DESCRIPTION	MATL SPEC AND SIZE OR COMPONENT VALUE	IDENTIFYING OR PART NO	FSCM NO

PARTS LIST

UNLESS OTHERWISE SPECIFIED ALL CAPACITORS ARE IN MICROFARADS AND ALL RESISTORS ARE IN OHMS ±10% AND 1/4 WATT

LAST REFERENCE DESIGNATION USED

C CB J K
Q R S U

ALL DIMENSIONS ARE IN INCHES UNLESS OTHERWISE SPECIFIED

TOLERANCES
3 PLACE DECIMAL ± .005
2 PLACE DECIMAL ± .02
1 PLACE DECIMAL ± .1

FRACTIONS ± ANGLES ±0° 30'

MAX SURFACE ROUGHNESS 125
ALL MACHINED SURFACES EXCEPT AS NOTED

BREAK SHARP EDGES AND CORNERS .010 MAX

FINISH NONE

CONTRACT NO		
DWN	[illegible]	10-18-89
ENGR	J.M. [illegible]	11/12/89
CHK	[illegible]	[illegible]
PROD	[illegible]	1-3-90
APVD	Brenda Spindle	
APVD		

Scientific-Atlanta 3845 Pleasantdale Road Atlanta, Georgia 30340

ASSEMBLY PWB DS1 2X2

SIZE	FSCM NO	DWG NO	REV
C	10110	456212	E

SCALE 1/1 SHEET 1 OF 1

DWG NO 456212 SH 1 REV E

NOTES:

1. INSTALL AT NEXT ASSEMBLY U25, U26, U27, U31,

2. PLACE C71 UNDER XU32 C72 UNDER XU33 AND ITE U23 BEFORE WAVE SOLDER.

3. C61 THRU C70 INSTALLED ON BACK OF PWB.

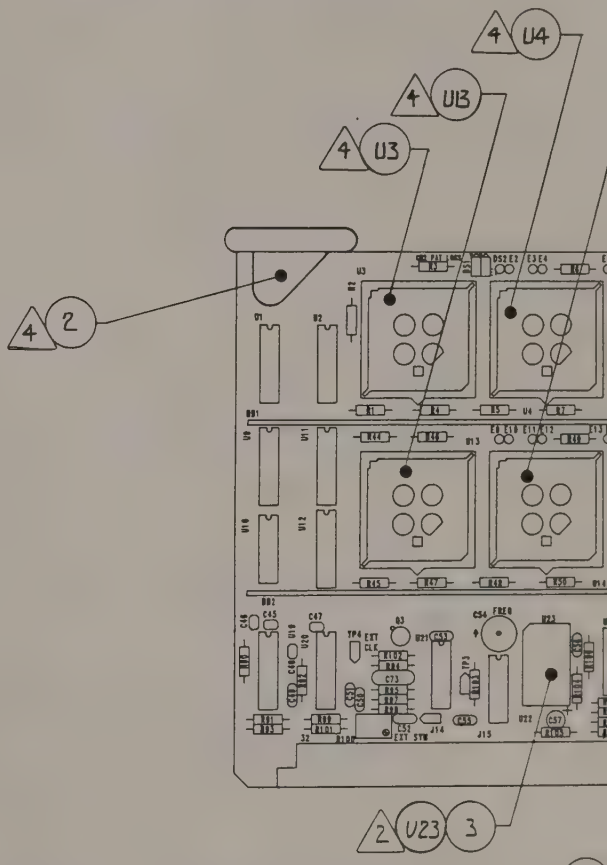

4. INSTALL AFTER WAVE SOLDER C61 THRU C70, U3, U4, U5, U6, U8, U13, U14, U15, U16, U18, U29, U30, U32, U33, U36, AND ITEM 2.

5. ITEMS P2 AND P8 ARE PLACED ON J2 AND J8 ON PINS 1 AND 2. INSTALL P2 AND P8 WITH RIDGGED END UP. SEE "VIEW A."

REV	DESCRIPTION	APPROVAL	DATE
A	ECR 12904, 12912, 12914.	T.M. Faber	10/25/90

4, AND U35.

3 UNDER

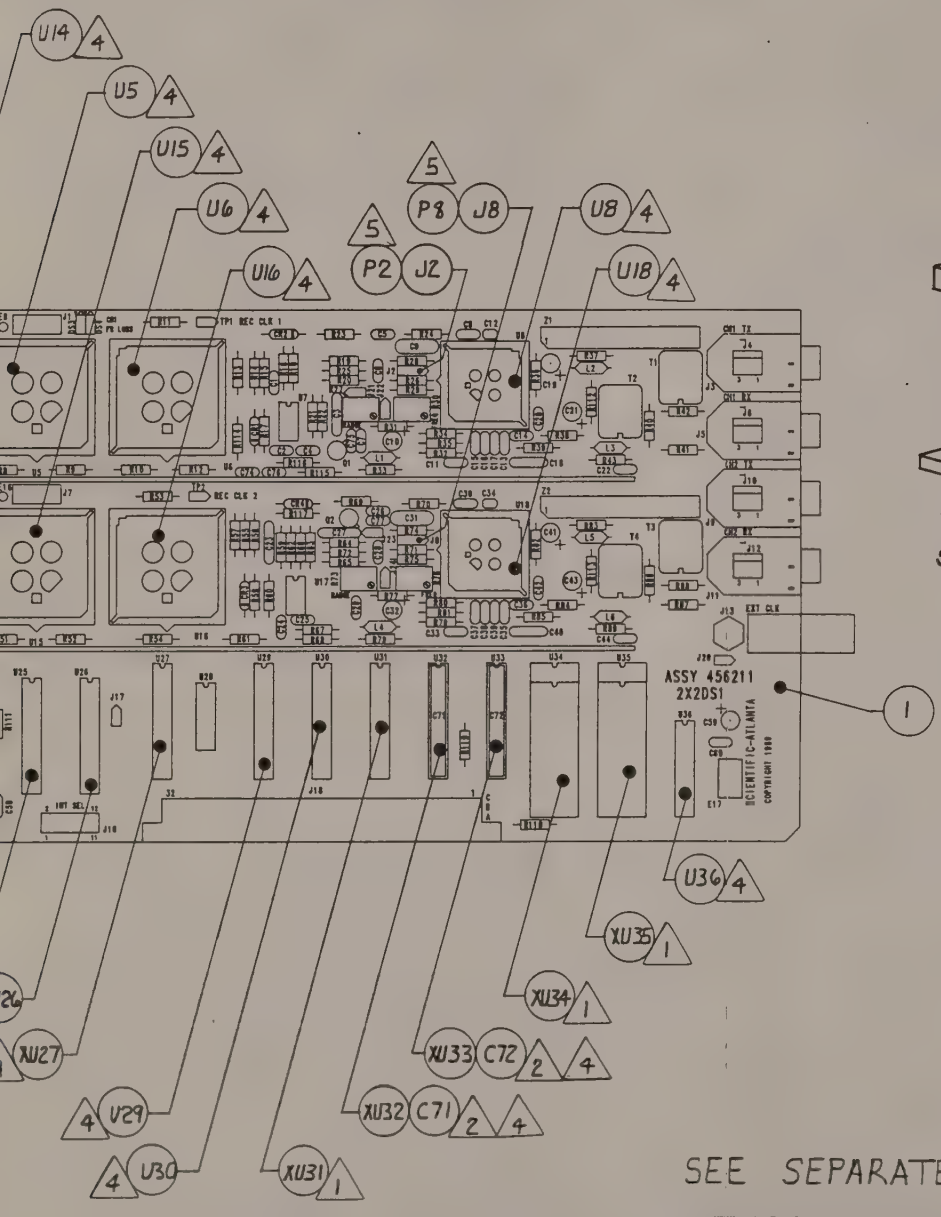

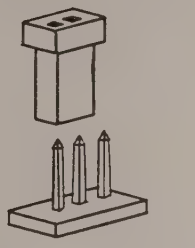

VIEW A
SCALE : NONE

SEE SEPARATE PARTS LIST

DWN	10-8-90	Scientific Atlanta	
ENGR T.M. FABER	11/13/89	P.O. BOX 105027 ATLANTA, GA 30348	
CHK JANICE COKER	11-13-89	SUB-ASSEMBLY DS1 2X2	
PROD STEVE THORMAN	1-4-90		
APVD B. SPRINKLER	FSCM NO. 10110	SCALE 1/1 SHEET 1 OF 2	DWG NO. 456211 REV A
SOURCE			

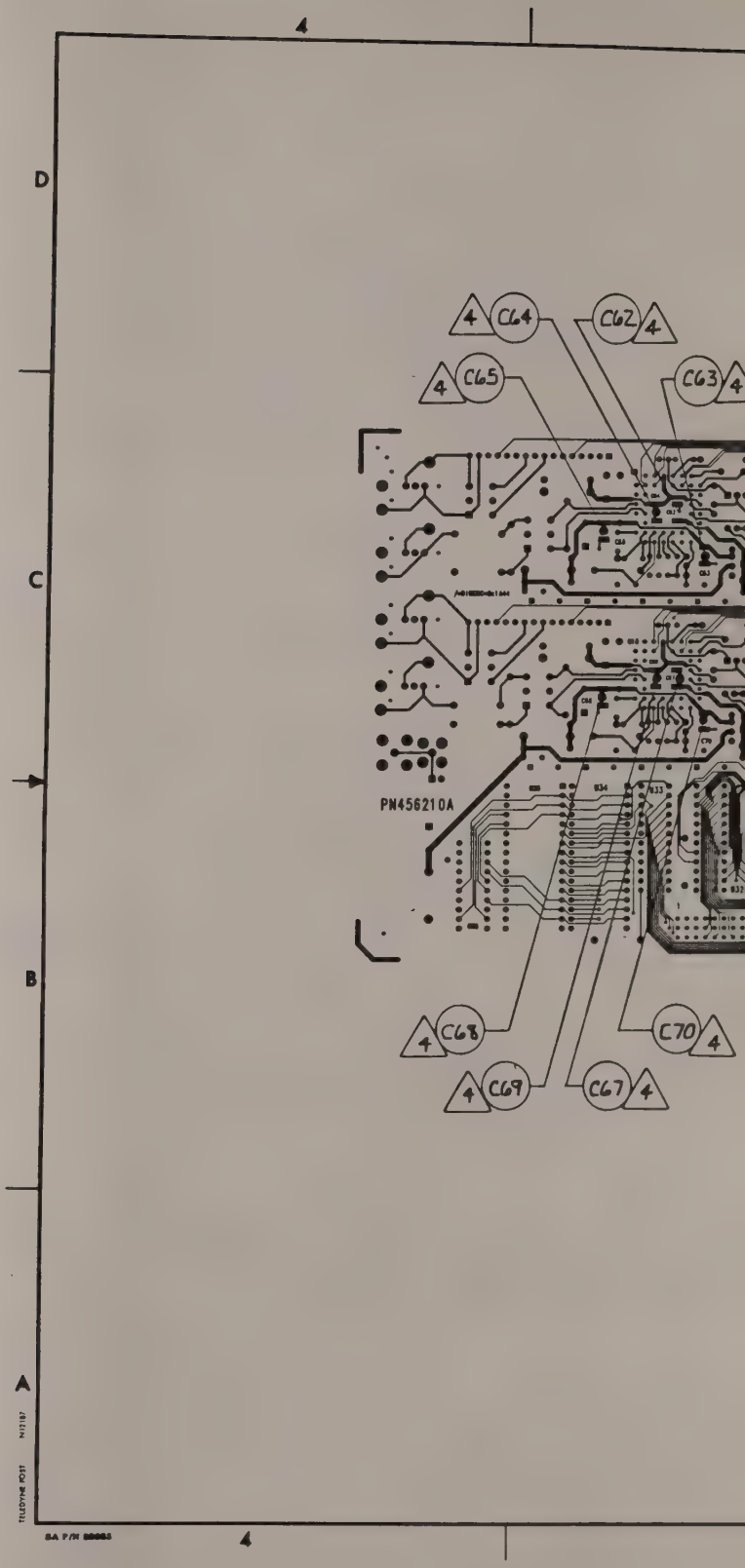
4
D
C
B
A
4
C64
C62
C65
C63
C68
C70
C69
C67
PN456210A

APPLICATION		
QTY REQD	NEXT ASSY	USED ON
1	456212	AT9000

REVISIONS				
ZONE	REV	DESCRIPTION	DATE	APPROVED
	A	SEE SH 1		

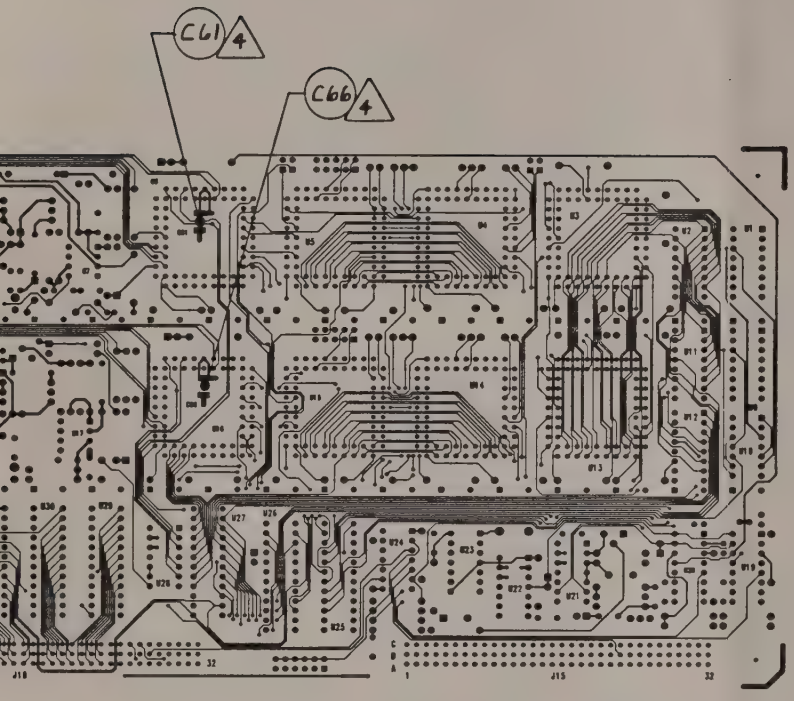

LAYER 4
PN458231

DWG NO 456211 SH 2 REV A

ITEM OR FIND NO	QTY REQD	B-A STOCK NO	NOMENCLATURE OR DESCRIPTION	MATL SPEC AND SIZE OR COMPONENT VALUE	IDENTIFYING OR PART NO	FSCM NO

PARTS LIST

UNLESS OTHERWISE SPECIFIED ALL CAPACITORS ARE IN MICRO-FARADS AND ALL RESISTORS ARE IN OHMS ±10% AND 1/4 WATT

LAST REFERENCE DESIGNATION USED

C CR J E
Q R S V

ALL DIMENSIONS ARE IN INCHES UNLESS OTHERWISE SPECIFIED

TOLERANCES
2 PLACE DECIMAL ± .02
3 PLACE DECIMAL ± .01
1 PLACE DECIMAL ± .1

FRACTIONS ± ANGLES ±1°

MAX SURFACE ROUGHNESS ALL MACHINED SURFACES EXCEPT AS NOTED 125

BREAK SHARP EDGES AND CORNERS .010 MAX

FINISH NONE

CONTRACT NO

DWN	Rod Lott	10-5-90
ENGR		
CHK		
PROD		
APVD		
APVD		

Scientific-Atlanta 3845 Pleasantdale Road Atlanta, Georgia 30340

SIZE	FSCM NO	DWG NO	REV
C	10110	456211	A

SCALE 1/1 SHEET 2

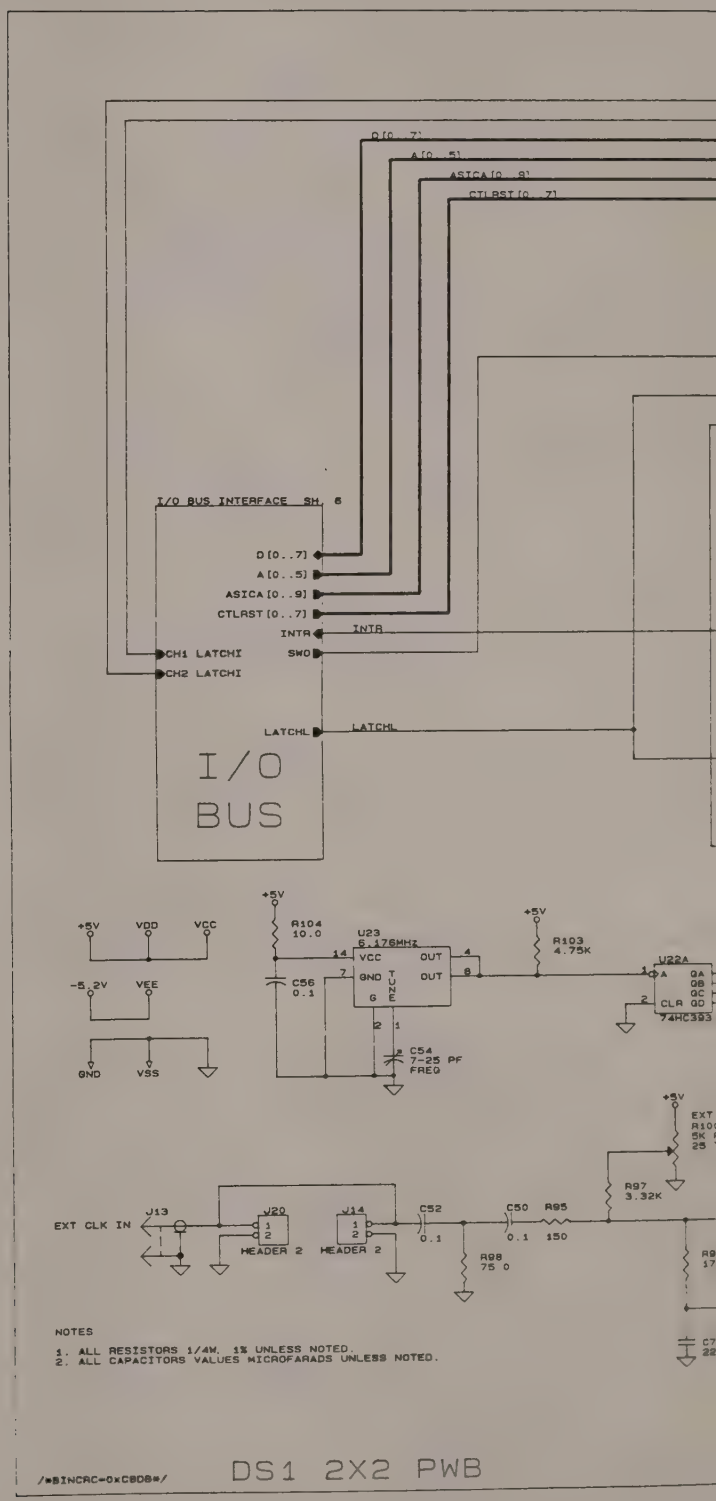
D[0..7]
A[0..5]
ASICA[0..9]
CTLRST[0..7]
I/O BUS INTERFACE SH. 6
D[0..7]
A[0..5]
ASICA[0..9]
CTLRST[0..7]
INTR
INTR
CH1 LATCHI
SWO
CH2 LATCHI
LATCHL
LATCHL
I/O BUS
+5V
VDD
VCC
-5.2V
VEE
GND
VSS
+5V
R104 10.0
U23 6.176MHz
VCC
GND
OUT
OUT
TUNE
C56 0.1
C54 7-25 PF FREQ
+5V
R103 4.75K
U22A
74HC393
EXT CLK IN
J13
J20
HEADER 2
J14
HEADER 2
C52 0.1
C50 0.1
R95 150
R98 75 0
R97 3.32K
+5V
NOTES
1. ALL RESISTORS 1/4W, 1% UNLESS NOTED.
2. ALL CAPACITORS VALUES MICROFARADS UNLESS NOTED.
/*$INCRC=0xC8D8*/
DS1 2X2 PWB

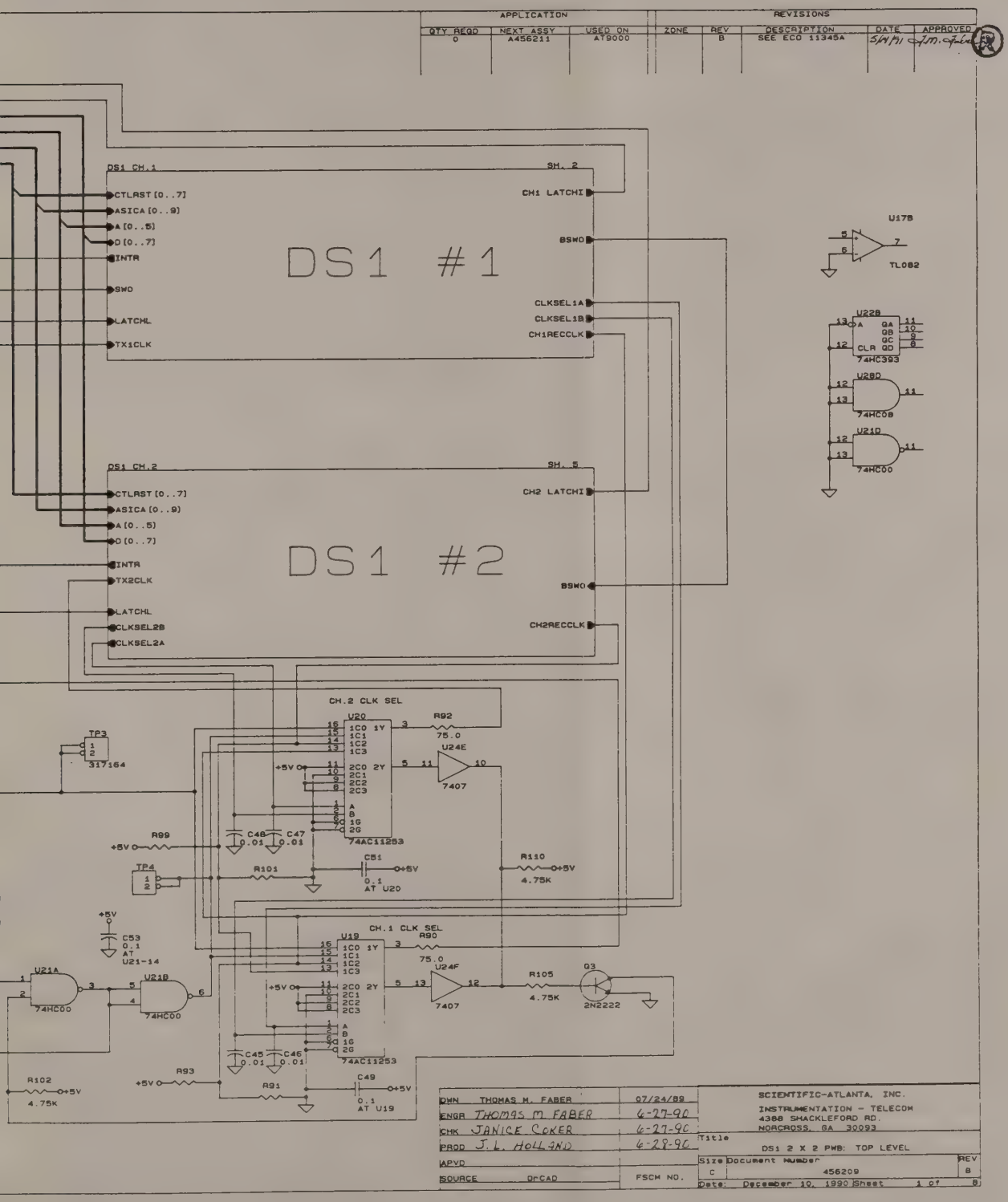
APPLICATION
QTY REQD 0
NEXT ASSY A456211
USED ON AT9000
REVISIONS
ZONE
REV B
DESCRIPTION SEE ECO 11345A
DATE 5/4/91
APPROVED
DS1 CH.1
CTLAST[0..7]
ASICA[0..9]
A[0..5]
D[0..7]
INTR
SWO
LATCHL
TX1CLK
SH. 2
CH1 LATCHI
BSWO
CLKSEL1A
CLKSEL1B
CH1RECCLK
DS1 #1
DS1 CH.2
CTLAST[0..7]
ASICA[0..9]
A[0..5]
D[0..7]
INTR
TX2CLK
LATCHL
CLKSEL2B
CLKSEL2A
SH. 5
CH2 LATCHI
BSWO
CH2RECCLK
DS1 #2
U17B
TL082
U22B
74HC393
U28D
74HC08
U21D
74HC00
CH.2 CLK SEL
U20
74AC11253
R92
75.0
U24E
7407
TP3
317164
R99
C48 0.01
C47 0.01
TP4
R101
C51 0.1 AT U20
R110 4.75K
CH.1 CLK SEL
U19
74AC11253
R90
75.0
U24F
7407
R105 4.75K
Q3
2N2222
C53 0.1 AT U21-14
U21A
74HC00
U21B
74HC00
C45 0.01
C46 0.01
R102 4.75K
R93
R91
C49 0.1 AT U19
DWN THOMAS M. FABER 07/24/89
ENGR THOMAS M FABER 6-27-90
CHK JANICE COKER 6-27-90
PROD J.L. HOLLAND 6-28-90
APVD
SOURCE OrCAD
FSCM NO.
SCIENTIFIC-ATLANTA, INC.
INSTRUMENTATION - TELECOM
4388 SHACKLEFORD RD.
NORCROSS, GA 30093
Title DS1 2 X 2 PWB: TOP LEVEL
Size C
Document Number 456209
REV B
Date: December 10, 1990 Sheet 1 of 8

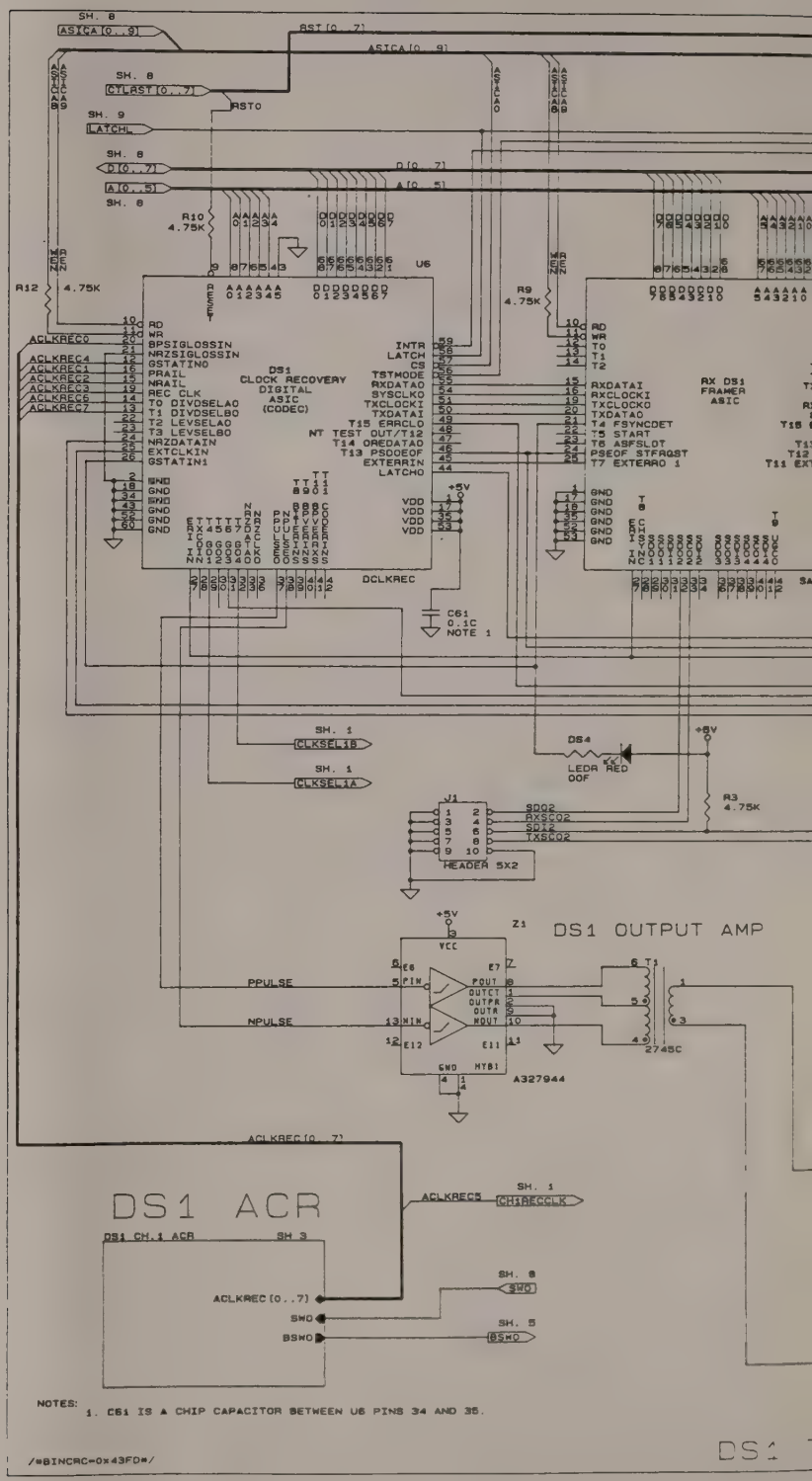

DS1 CLOCK RECOVERY DIGITAL ASIC (CODEC)
DS1 OUTPUT AMP
DS1 ACR
DS1 CH.1 ACR
RX DS1 FRAMER ASIC
HEADER 5X2
A327944
2745C
DCLKREC
NOTES:
1. C61 IS A CHIP CAPACITOR BETWEEN U6 PINS 34 AND 35.
/*BINCRC=0x43FD*/

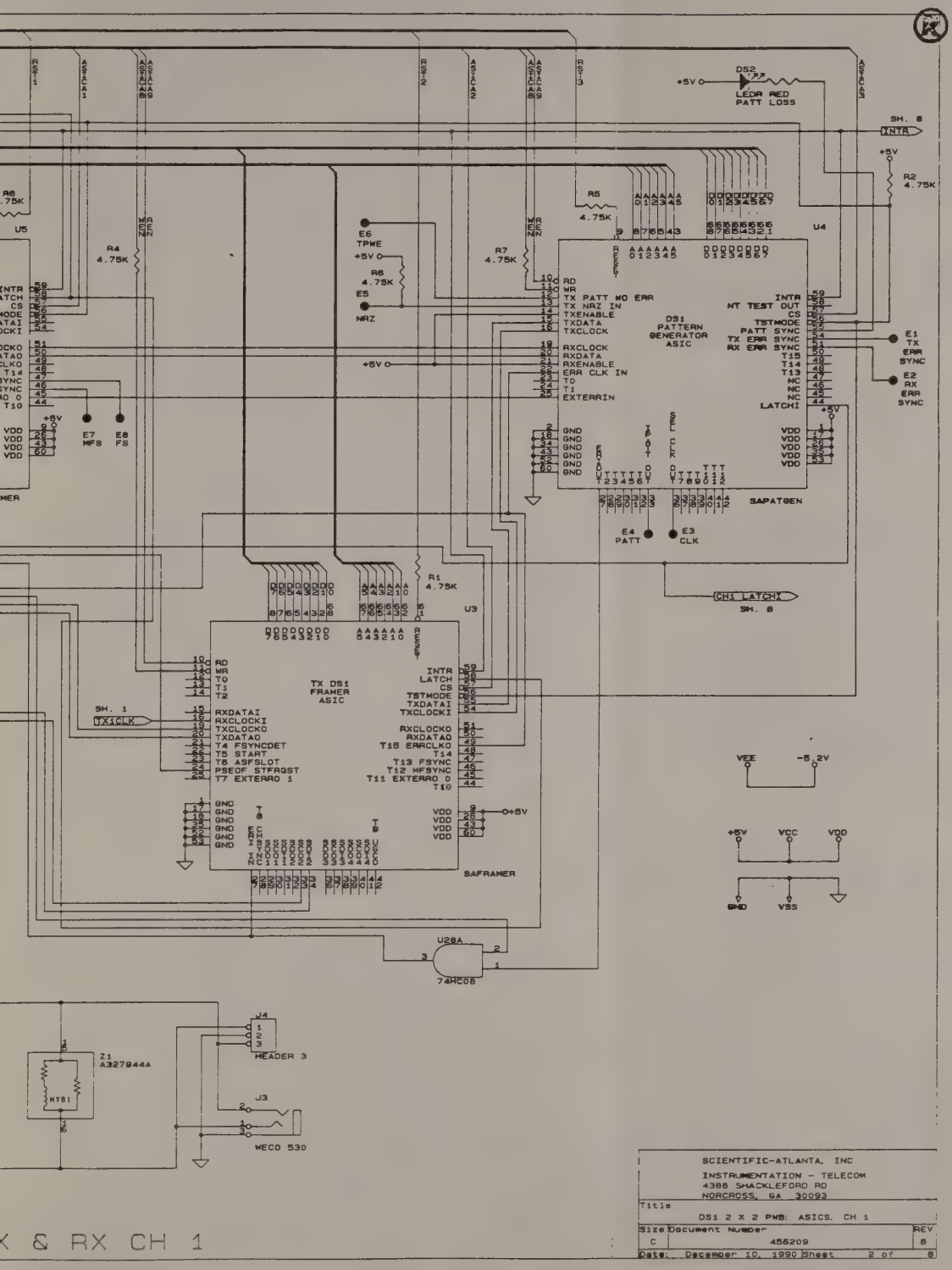
DS2
LEDA RED
PATT LOSS
+5V
SH. 8
INTR
R2
4.75K
R5
4.75K
R4
4.75K
R7
4.75K
R6
4.75K
E6
TPWE
E5
NRZ
U4
DS1
PATTERN
GENERATOR
ASIC
RD
WR
TX PATT WO ERR
TX NRZ IN
TXENABLE
TXDATA
TXCLOCK
RXCLOCK
RXDATA
RXENABLE
ERR CLK IN
T0
T1
EXTERRIN
INTR
MT TEST OUT
CS
TSTMODE
PATT SYNC
TX ERR SYNC
RX ERR SYNC
T15
T14
T13
NC
NC
NC
LATCHI
GND
VDD
SAPATGEN
E1
TX
ERR
SYNC
E2
RX
ERR
SYNC
E4
PATT
E3
CLK
CH1 LATCH
SH. 8
R1
4.75K
U3
TX DS1
FRAMER
ASIC
SH. 1
TX1CLK
RXDATAI
RXCLOCKI
TXCLOCKO
TXDATAO
T4 FSYNCDET
T5 START
T6 ASFSLOT
PSEOF STFROST
T7 EXTERRO 1
INTR
LATCH
CS
TSTMODE
TXDATAI
TXCLOCKI
RXCLOCKO
RXDATAO
T15 ERRCLKO
T14
T13 FSYNC
T12 MFSYNC
T11 EXTERRO 0
T10
SAFRAMER
VEE
-5.2V
VCC
VDD
VSS
U28A
74HC08
Z1
A327944A
MT81
J4
HEADER 3
J3
WECO 530
SCIENTIFIC-ATLANTA, INC
INSTRUMENTATION - TELECOM
4388 SHACKLEFORD RD
NORCROSS, GA 30093
Title
DS1 2 X 2 PWB: ASICS. CH 1
Size
C
Document Number
456209
REV
8
Date: December 10, 1990 Sheet 2 of 8
X & RX CH 1

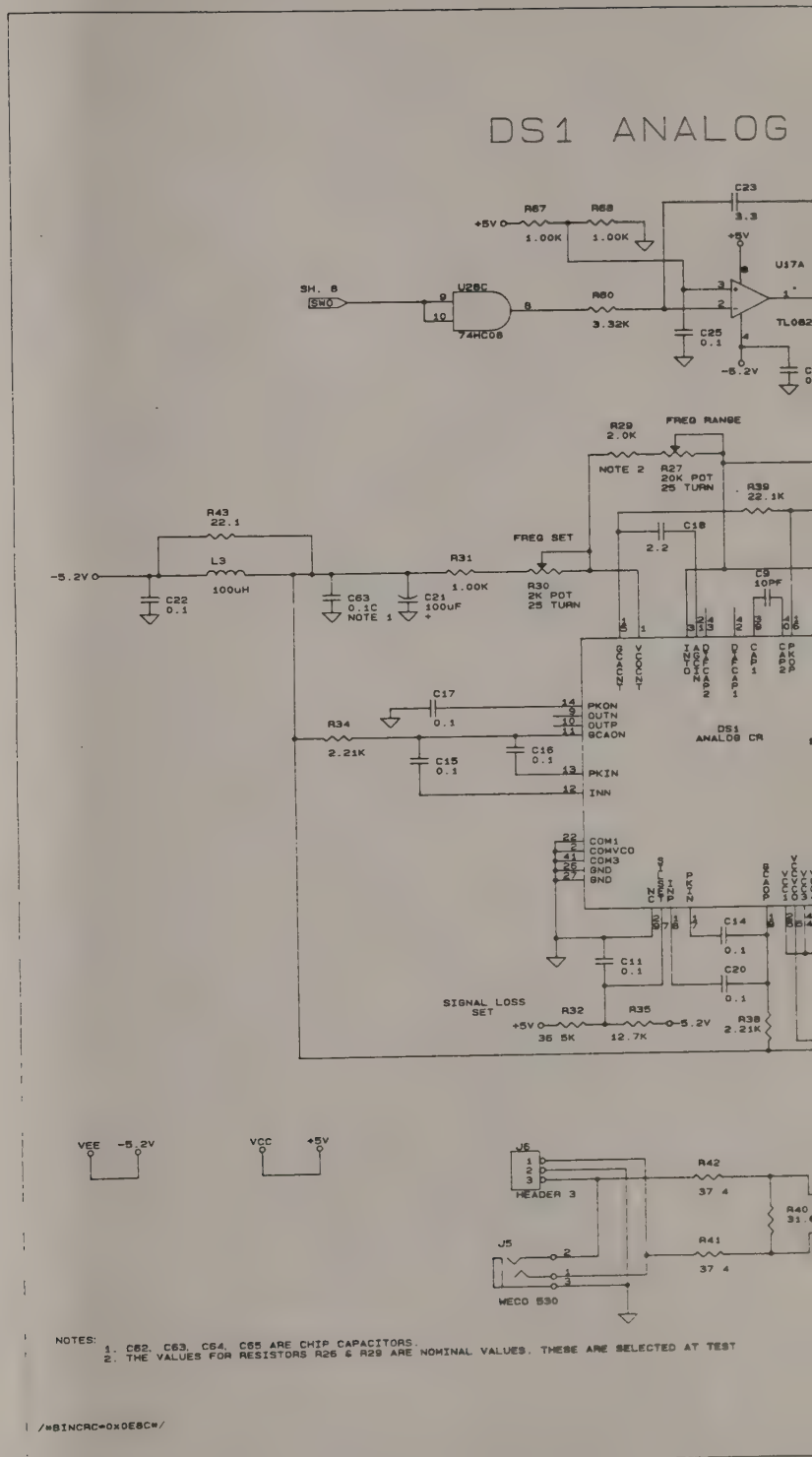

NOTES:
1. C62, C63, C64, C65 ARE CHIP CAPACITORS.
2. THE VALUES FOR RESISTORS R26 & R29 ARE NOMINAL VALUES. THESE ARE SELECTED AT TEST

/*$INCRC=0x0E8C*/

CLOCK RECOVERY CH 1

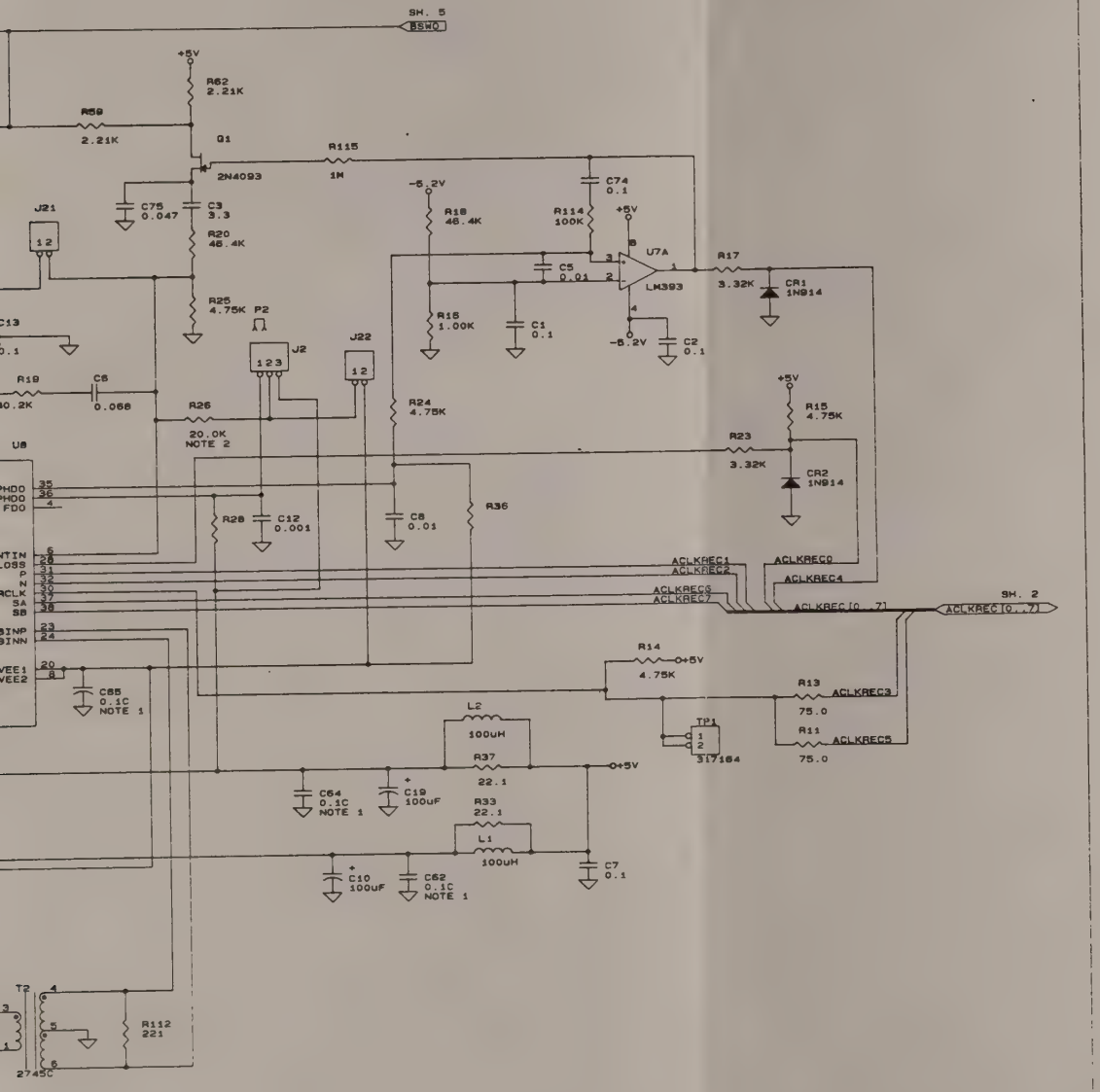

SCIENTIFIC-ATLANTA, INC INSTRUMENTATION - TELECOM 4388 SHACKLEFORD RD. NORCROSS, GA 30093		
Title: DS1 2 X 2 PWB: ANALOG CLK REC. CH 1		
Size: C	Document Number: 456209	REV: B
Date: December 10, 1990	Sheet 3 of 8	

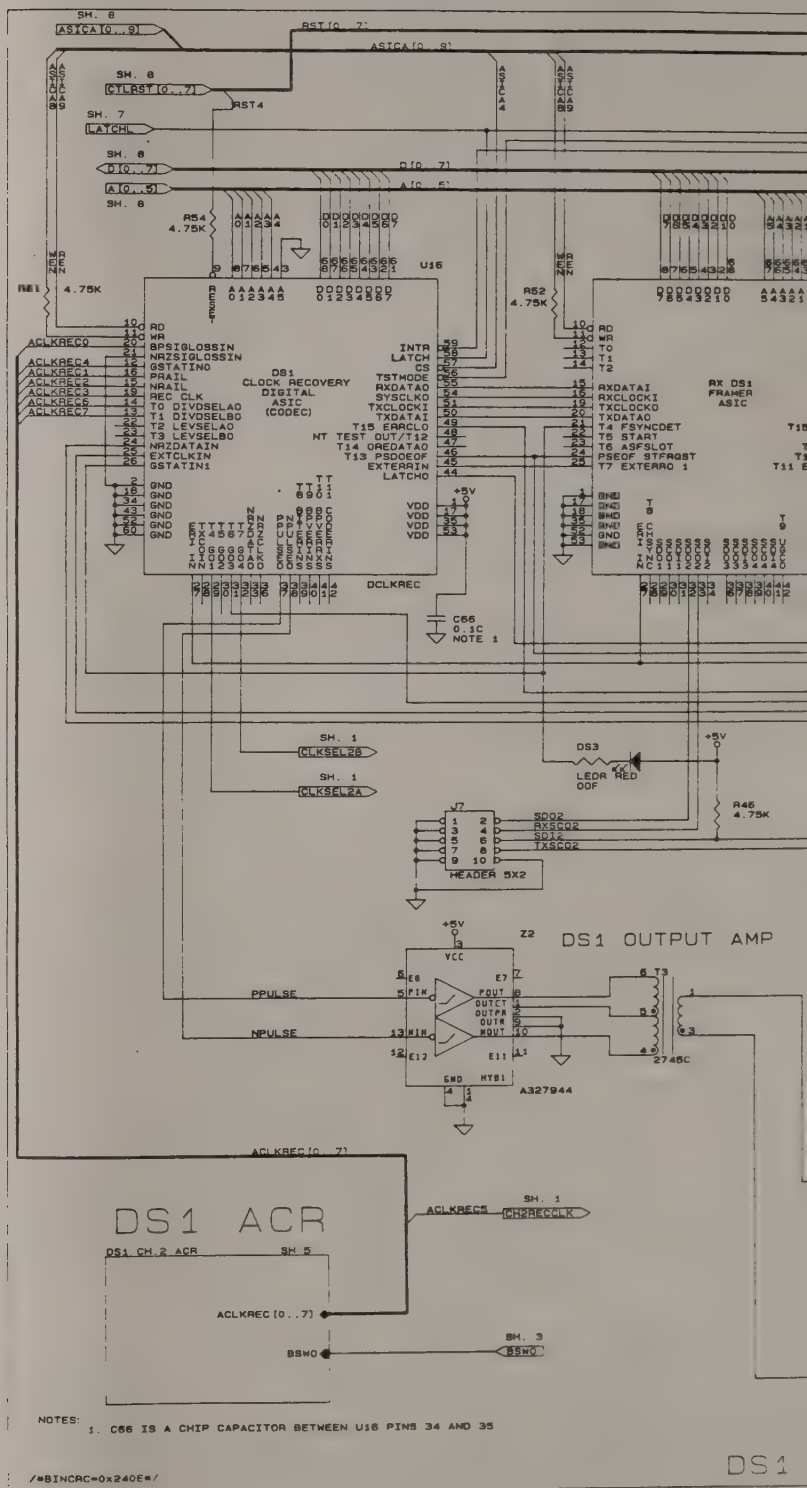
DS1 ACR
DS1 OUTPUT AMP
DS1 CH.2 ACR
SH. 5
ACLKREC[0..7]
ACLKREC5
CH2RECCLK
BSWO
PPULSE
NPULSE
DCLKREC
HEADER 5X2
A327944
2745C
NOTES:
1. C66 IS A CHIP CAPACITOR BETWEEN U16 PINS 34 AND 35
/*BINCRC=0x240E*/
DS1

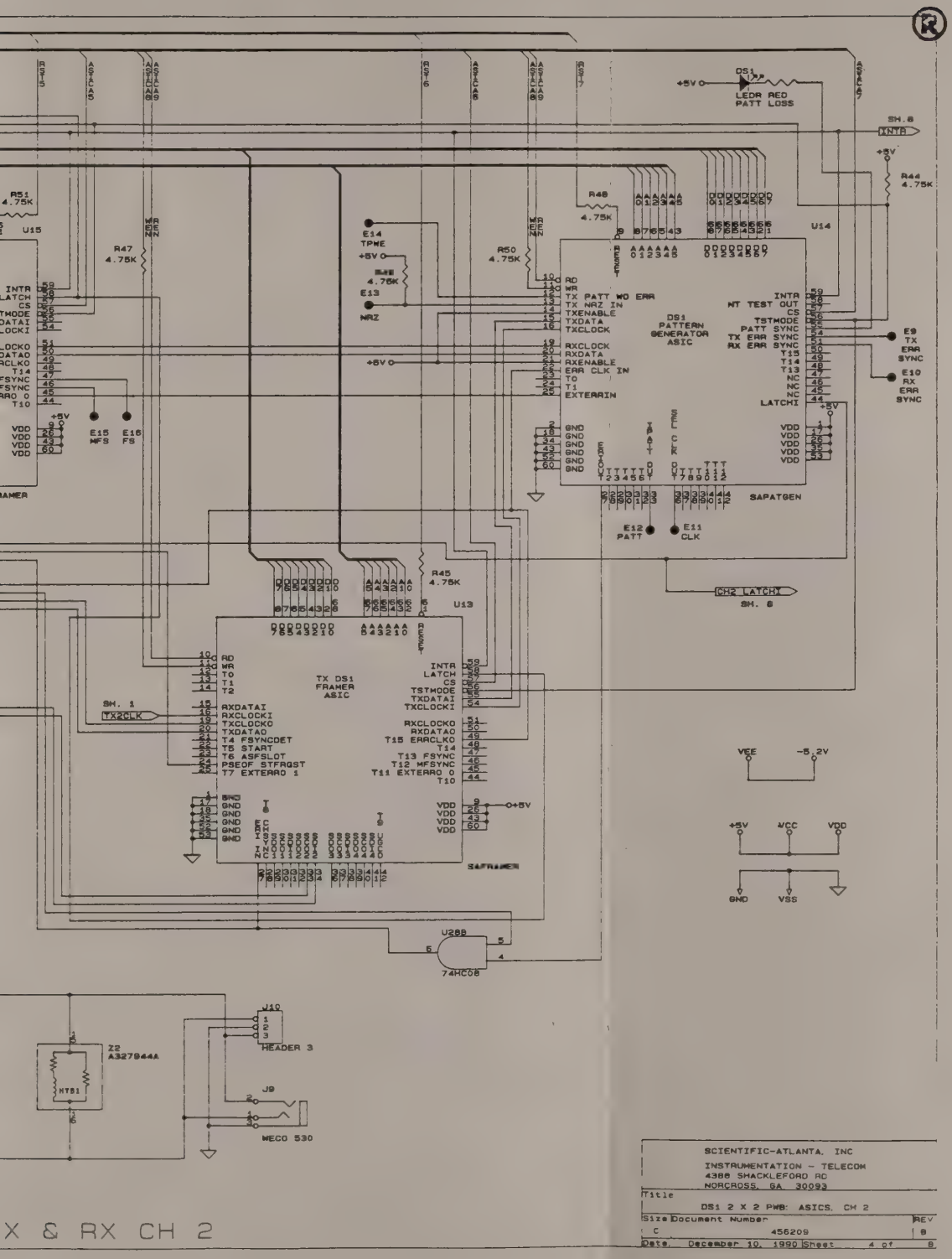
DS1
LEDR RED
PATT LOSS
+5V
SH.8
XNTA
R44
4.75K
R48
4.75K
R47
4.75K
R50
4.75K
R51
4.75K
R45
4.75K
E14
TPWE
E13
NRZ
U14
DS1
PATTERN
GENERATOR
ASIC
TX PATT WO ERR
TX NRZ IN
TXENABLE
TXDATA
TXCLOCK
RXCLOCK
RXDATA
RXENABLE
ERR CLK IN
EXTERRIN
INTR
NT TEST OUT
TSTMODE
PATT SYNC
TX ERR SYNC
RX ERR SYNC
LATCHI
E9
TX
ERR
SYNC
E10
RX
ERR
SYNC
SAPATGEN
E12
PATT
E11
CLK
CH2 LATCHY
SH. 6
U13
TX DS1
FRAMER
ASIC
SH. 1
TX2CLK
RXDATAI
RXCLOCKI
TXCLOCKO
TXDATAO
T4 FSYNCDET
T5 START
T6 ASFSLOT
PSEOF STFRQST
T7 EXTERRO 1
INTR
LATCH
CS
TSTMODE
TXDATAI
TXCLOCKI
RXCLOCKO
RXDATAO
T15 ERRCLKO
T14
T13 FSYNC
T12 MFSYNC
T11 EXTERRO 0
T10
VEE
-5.2V
+5V
VCC
VDD
GND
VSS
U28B
74HC08
U10
HEADER 3
J9
WECO 530
Z2
A3279444A
MT81
SCIENTIFIC-ATLANTA, INC
INSTRUMENTATION - TELECOM
4386 SHACKLEFORD RD
NORCROSS, GA 30093
Title
DS1 2 X 2 PWB: ASICS, CH 2
Size
C
Document Number
456209
REV
B
Date: December 10, 1990
Sheet 4 of 8

X & RX CH 2

DS1 ANALOG

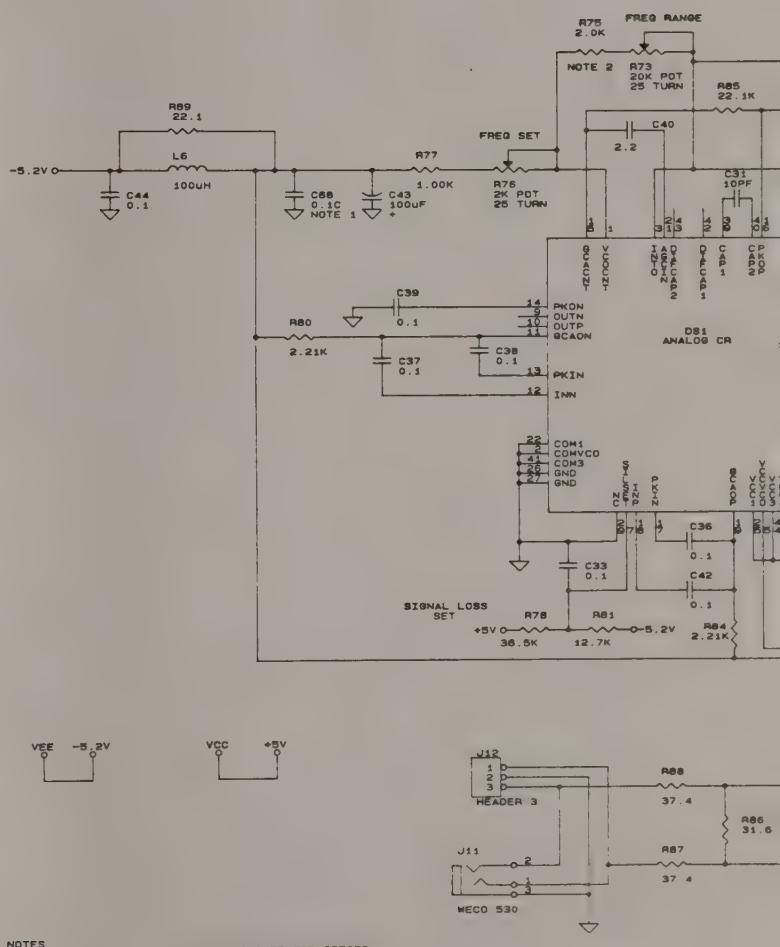

NOTES
1. C67, C68, C69, C70 ARE CHIP CAPACITORS.
2. THE VALUES FOR RESISTORS R71 & R75 ARE NOMINAL VALUES. THESE ARE SELECTED AT TEST

/*BINCRC=0x91AD*/

CLOCK RECOVERY CH 2

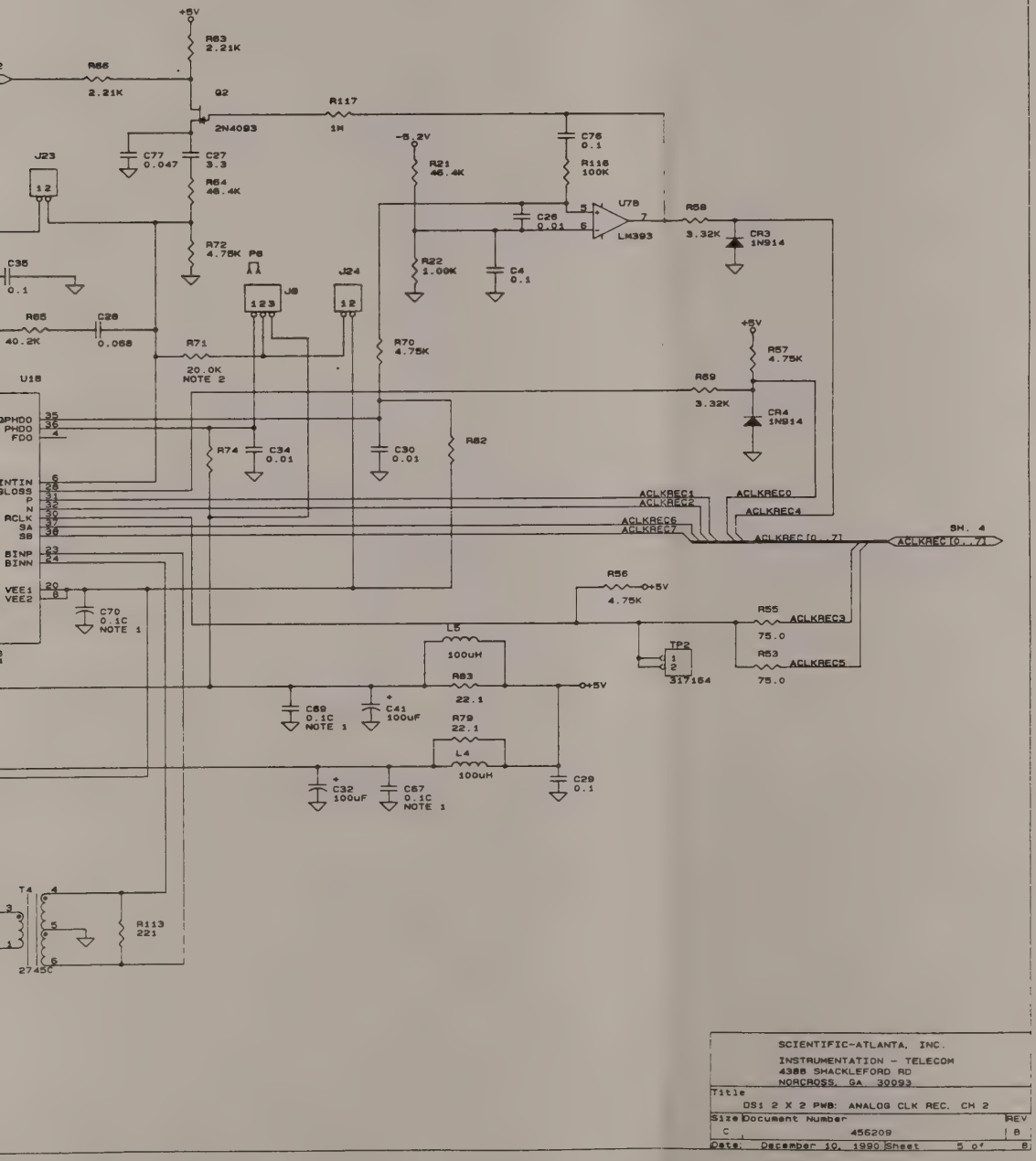

SCIENTIFIC-ATLANTA, INC.	
INSTRUMENTATION - TELECOM 4386 SHACKLEFORD RD NORCROSS, GA 30093	
Title	DS1 2 X 2 PWB: ANALOG CLK REC. CH 2
Size C	Document Number 456209 REV B
Date: December 10, 1990	Sheet 5 of 8

2 X 2 B

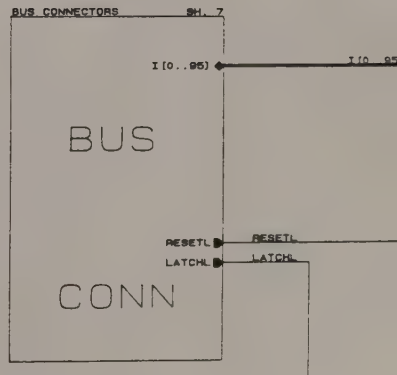

/*BINCRC=0x8CE4*/

US INTERFACE

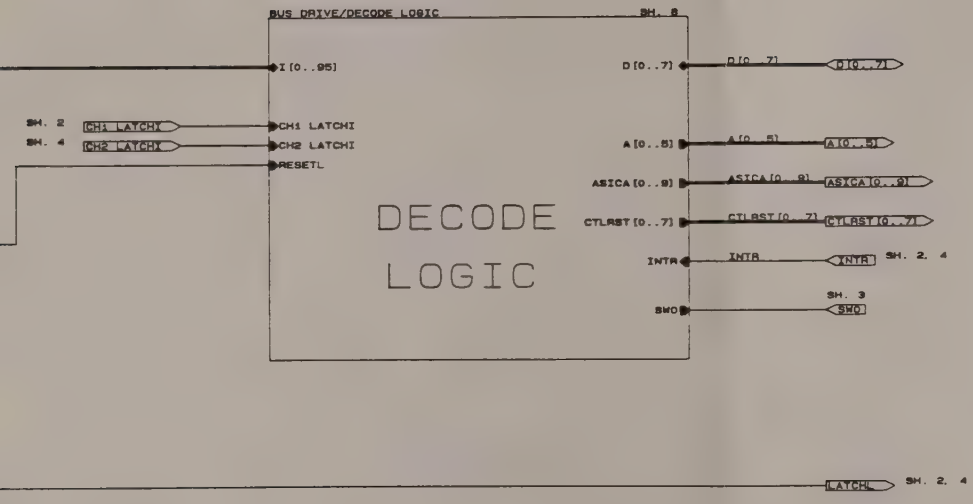

SCIENTIFIC-ATLANTA, INC.	
INSTRUMENTATION - TELECOM	
4386 SHACKLEFORD RD.	
NORCROSS, GA. 30093	
Title	
DS1 2 X 2 PWB: BUS INTERFACE INTERCONNECT	
Size: C	Document Number: 456209 REV: B
Date: December 10, 1990	Sheet 6 of 8

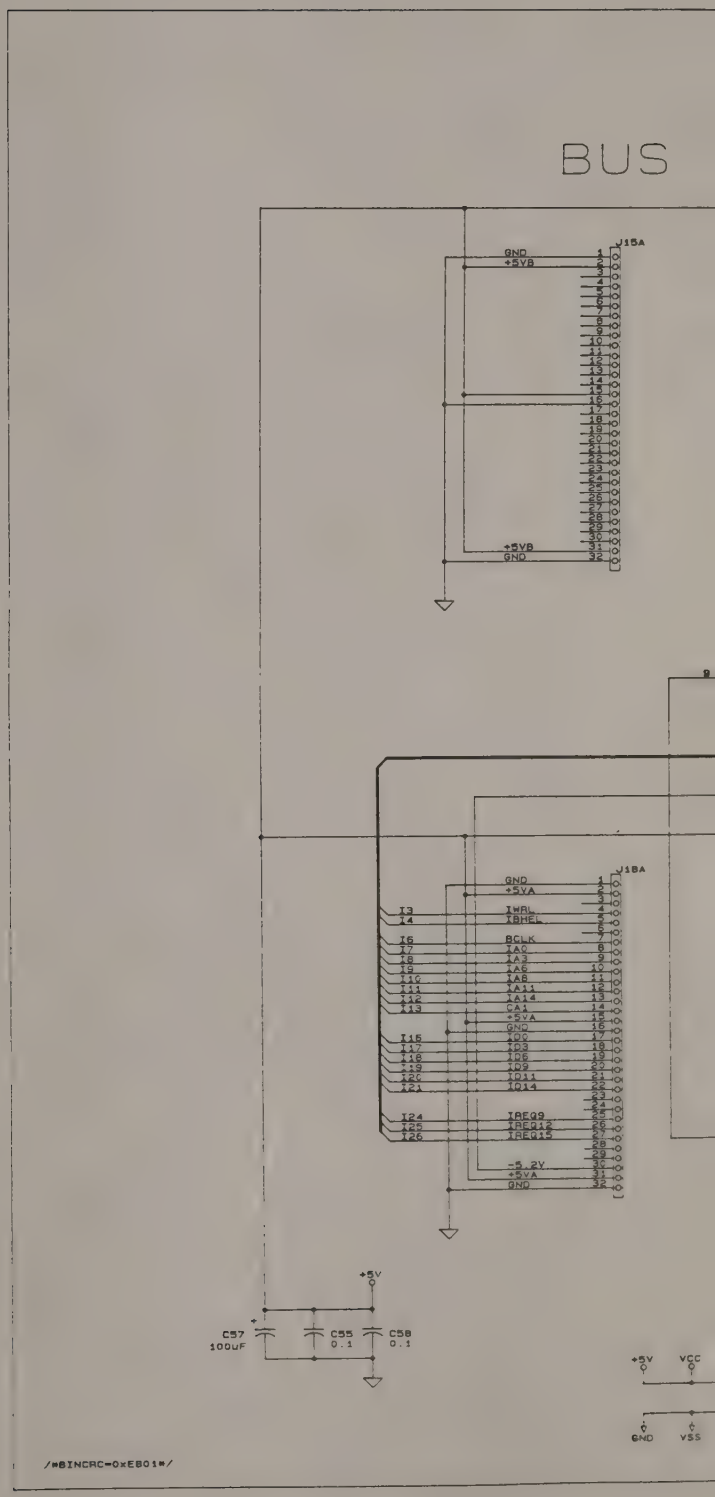
BUS
J15A
GND
+5VB
+5VB
GND
J18A
GND
+5VA
I3
I4
IWRL
IBHEL
I6
I7
I8
I9
I10
I11
I12
I13
BCLK
IAC
IA2
IA6
IA8
IA11
IA14
CA1
+5VA
GND
I15
I17
I18
I19
I20
I21
ID9
ID3
ID6
ID9
ID11
ID14
I24
I25
I26
IREQ9
IREQ12
IREQ15
-5.2V
+5VA
GND
+5V
C57
100uF
C55
0.1
C58
0.1
+5V
VCC
GND
VSS
/*BINCRC=0xEB01*/

CONNECTORS

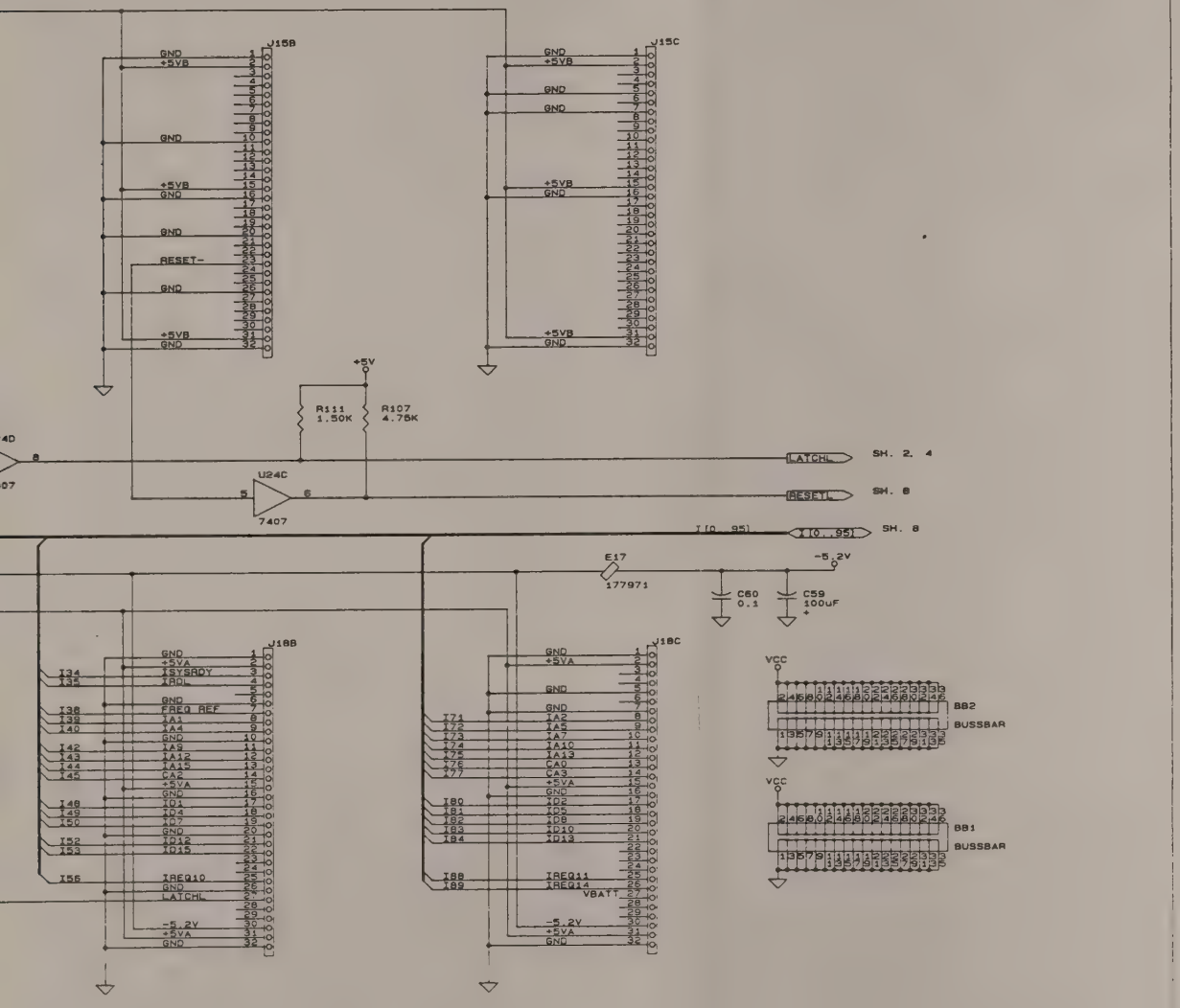

SCIENTIFIC-ATLANTA, INC.		
INSTRUMENTATION - TELECOM		
4386 SHACKLEFORD RD		
NORCROSS, GA 30093		
Title: 051 2 X 2 PWB BUS CONNECTOR WIRING		
Size: C	Document Number: 456209	REV: B
Date: December 10, 1990	Sheet 7 of 8	

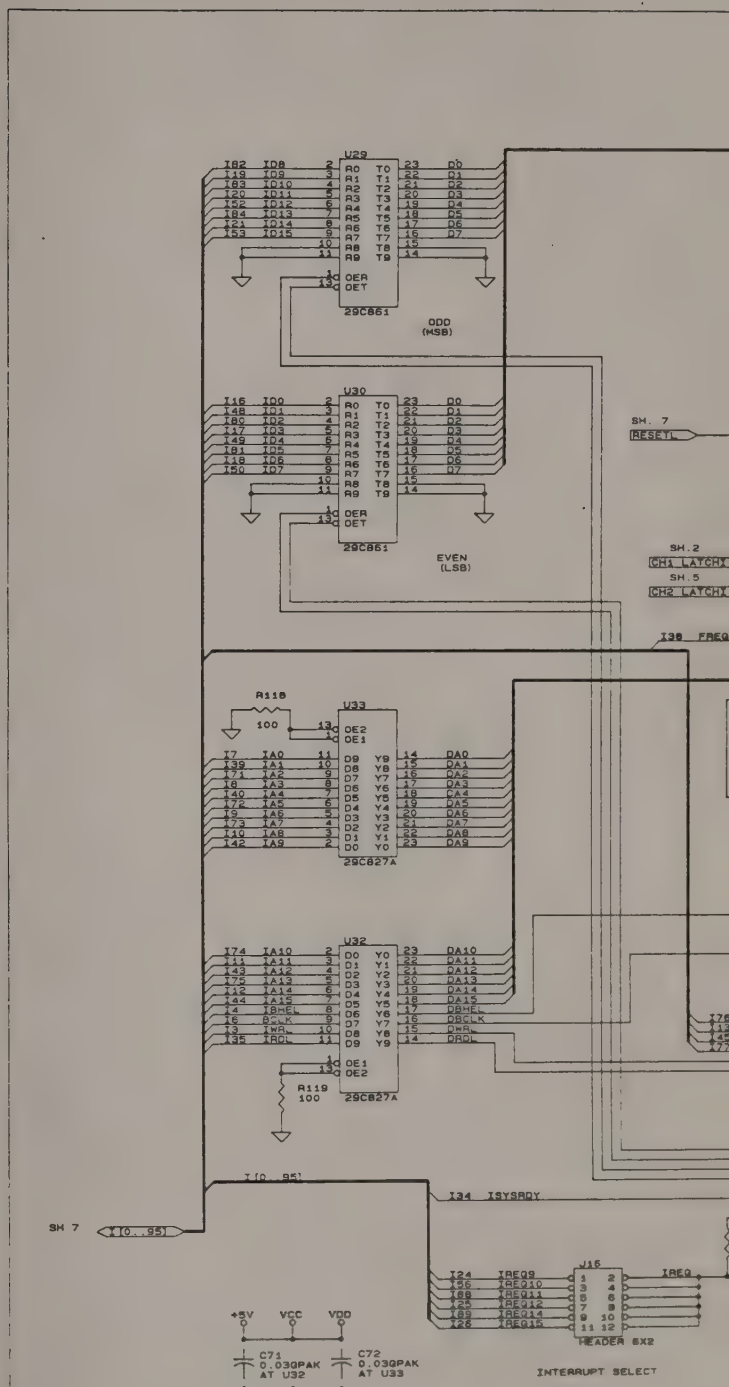
U29
29C861
ODD
(MSB)
U30
29C861
EVEN
(LSB)
SH. 7
RESET
SH.2
SH.5
I38 FREQ
R118
100
U33
29C827A
U32
29C827A
R119
100
I[0..95]
SH 7
I34 ISYSRDY
U16
HEADER 6X2
INTERRUPT SELECT
+5V
VCC
VDD
C71
0.03UPAK
AT U32
C72
0.03UPAK
AT U33
GND
VSS
/*$INCRC=0x6F79*/
DS1 2 X 2 BUS INTERFAC

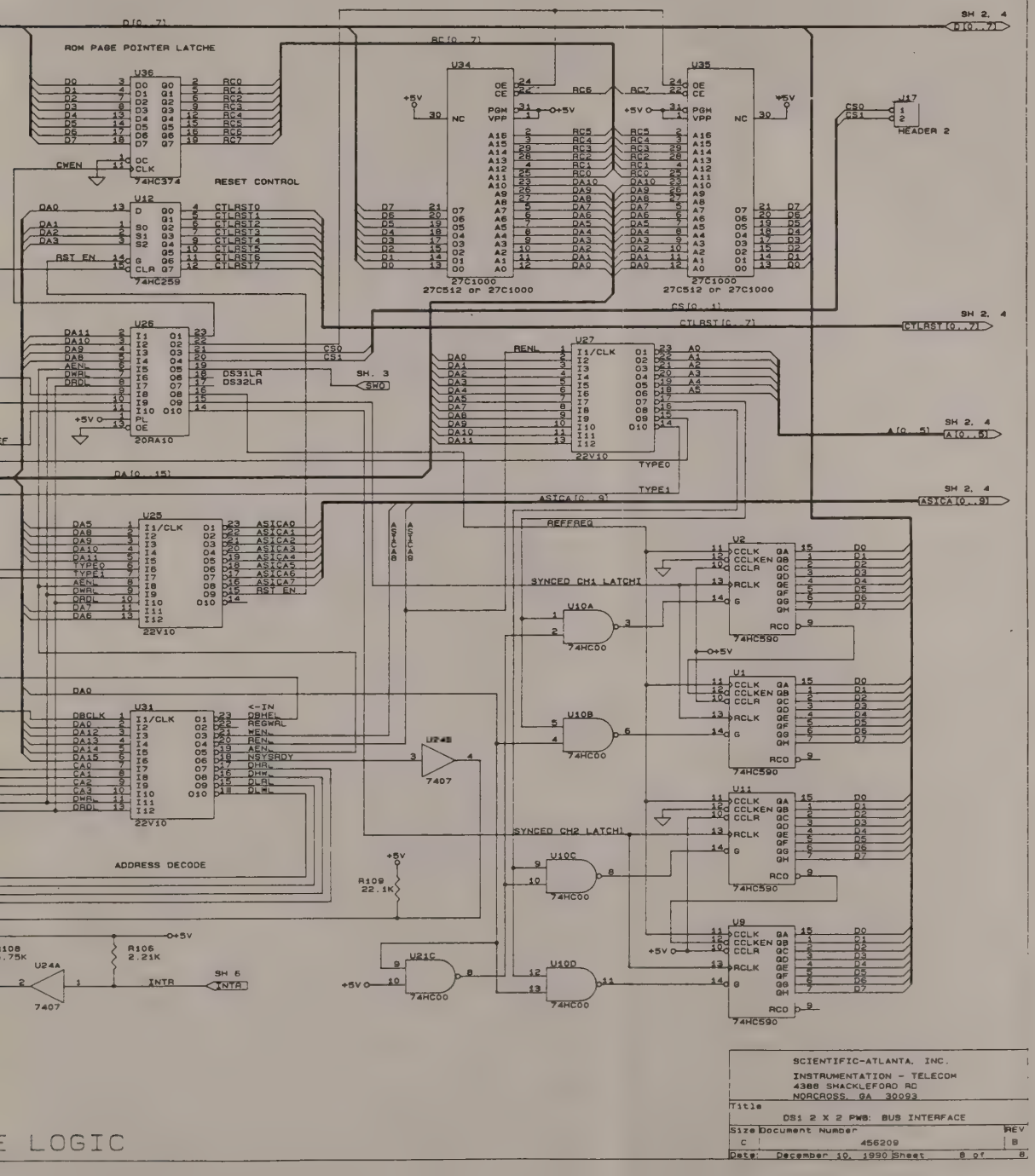
ROM PAGE POINTER LATCHE
RESET CONTROL
ADDRESS DECODE
SYNCED CH1 LATCH
SYNCED CH2 LATCH
HEADER 2
SCIENTIFIC-ATLANTA, INC.
INSTRUMENTATION - TELECOM
4388 SHACKLEFORD RD
NORCROSS, GA 30093
Title
DS1 2 X 2 PWB: BUS INTERFACE
Size C
Document Number 456209
REV B
Date: December 10, 1990 Sheet 8 of 8
E LOGIC

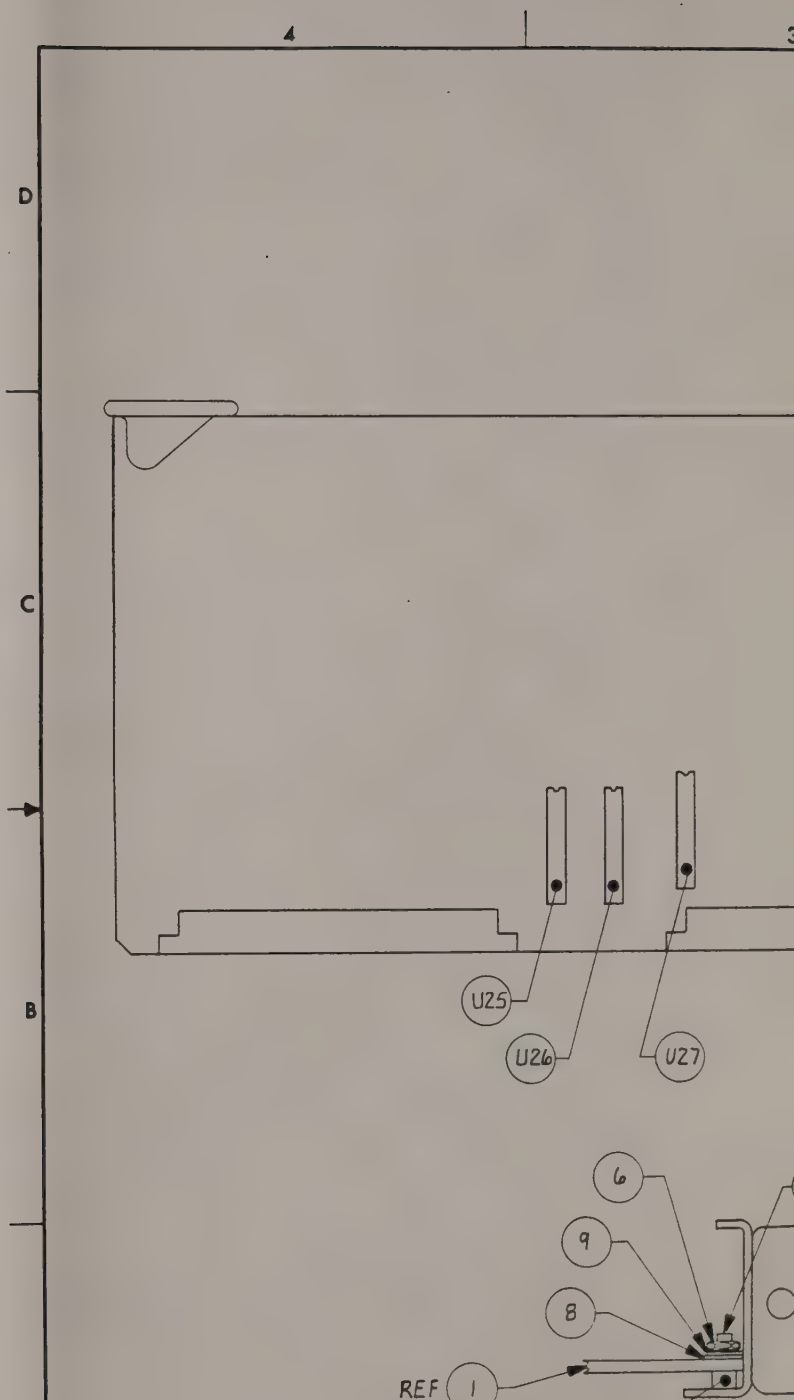
4
3
D
C
B
A
U25
U26
U27
6
9
8
REF
1
5
VIEW
SCAL: 2
4
3

APPLICATION		
QTY REQD	NEXT ASSY	USED ON
1	306200	AT9000

REVISIONS				
ZONE	REV	DESCRIPTION	DATE	APPROVED
	A	INC ECO 10937		
	B	ECO 11003, 11174	7/10/90	J.M. [illegible]
	C	ECO 11351, 11365	5/14/90	J.M. [illegible]
	D	INC ECR 15029. [illegible]	6/28/91	J.M. [illegible]

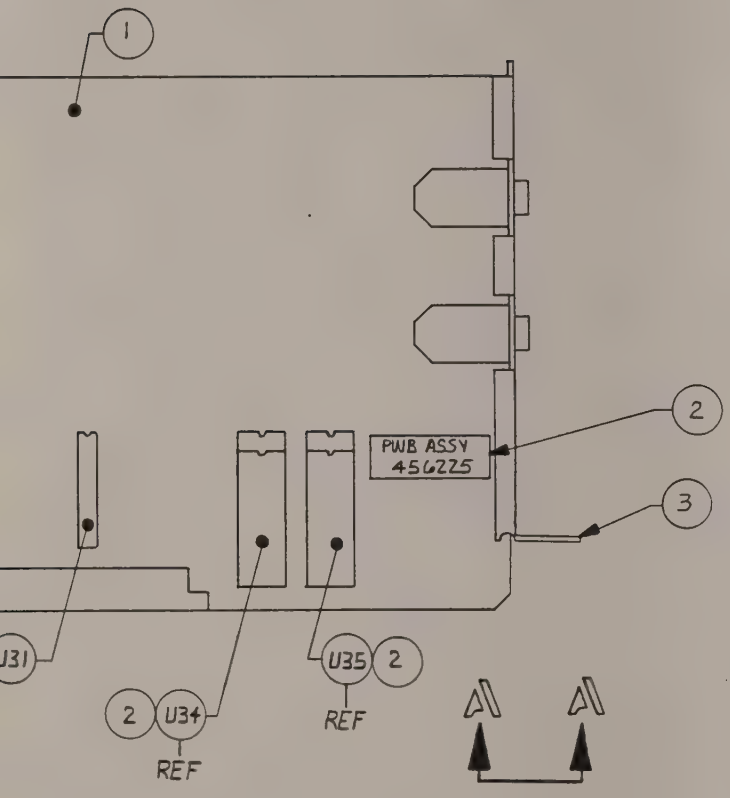

SEE SEPARATE PARTS LIST

ITEM OR FIND NO.	QTY REQD	S-A STOCK NO	NOMENCLATURE OR DESCRIPTION	MATL SPEC AND SIZE OR COMPONENT VALUE	IDENTIFYING OR PART NO	FSCM NO

PARTS LIST

UNLESS OTHERWISE SPECIFIED ALL CAPACITORS ARE IN MICROFARADS AND ALL RESISTORS ARE IN OHMS ±10% AND 1/4 WATT

LAST REFERENCE DESIGNATION USED

C CR J K
Q R S U

ALL DIMENSIONS ARE IN INCHES UNLESS OTHERWISE SPECIFIED

TOLERANCES
3 PLACE DECIMAL ± .005
2 PLACE DECIMAL ± .02
1 PLACE DECIMAL ± .1

FRACTIONS ± ANGLES ±0° 30'

MAX SURFACE ROUGHNESS 125 ALL MACHINED SURFACES EXCEPT AS NOTED

BREAK SHARP EDGES AND CORNERS .010 MAX

FINISH NONE

CONTRACT NO

DWN	[illegible]	10-18-89
ENGR	[illegible]	11/
CHK	[illegible]	11/
PROD	[illegible]	2 7-90
APVD	[illegible]	
APVD		

Scientific-Atlanta 3845 Pleasantdale Road Atlanta, Georgia 30340

ASSEMBLY PWB DSI 2-POINT MONITOR

SIZE	FSCM NO	DWG NO	REV
C	10110	456225	D

SCALE 1/1 SHEET 1 OF 1

DWG NO 456225 SH 1 REV D

NOTES:

1. INSTALL ON NEXT ASSEMBLY U25, U26, U27, U31,

2. PLACE C71 UNDER XU32 AND C72 UNDER XU33 BEF

3. C61 THRU C70 INSTALLED ON BACK OF PWB.

4. INSTALL AFTER WAVE SOLDER C61, C62, C63, C64, C6 C67, C68, C69, C70, U4, U5, U6, U8, U14, U15, U16, U18, U2 U30, U32, U36, AND ITEM 2.

5. ITEM P2 AND P8 ARE PLACED ON J2 AND J8 ON PINS 1 AND 2. INSTALL P2 AND P8 WITH RIDGED END UP. SEE VIEW A"

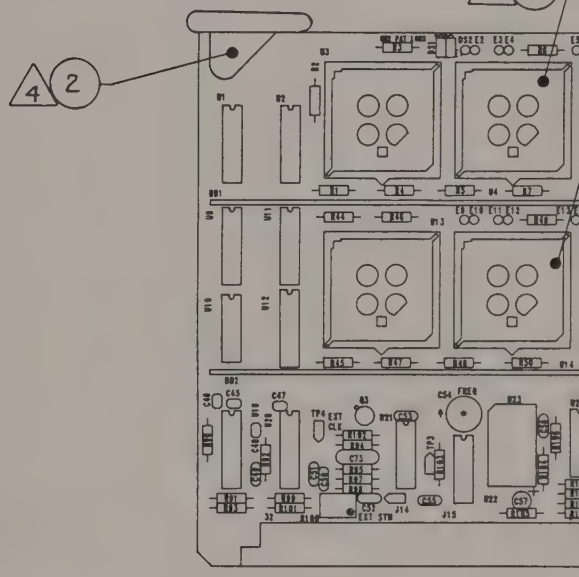

6. INSTALL LABEL OVER 456211-2X2 DSI SILKSCREEN.

VI

SCA

REV	DESCRIPTION	APPROVAL	DATE
A	ECO 11136, 11271, 11345	J.M. Faber	10/25/90

34, AND U35.

RE WAVE SOLDER.

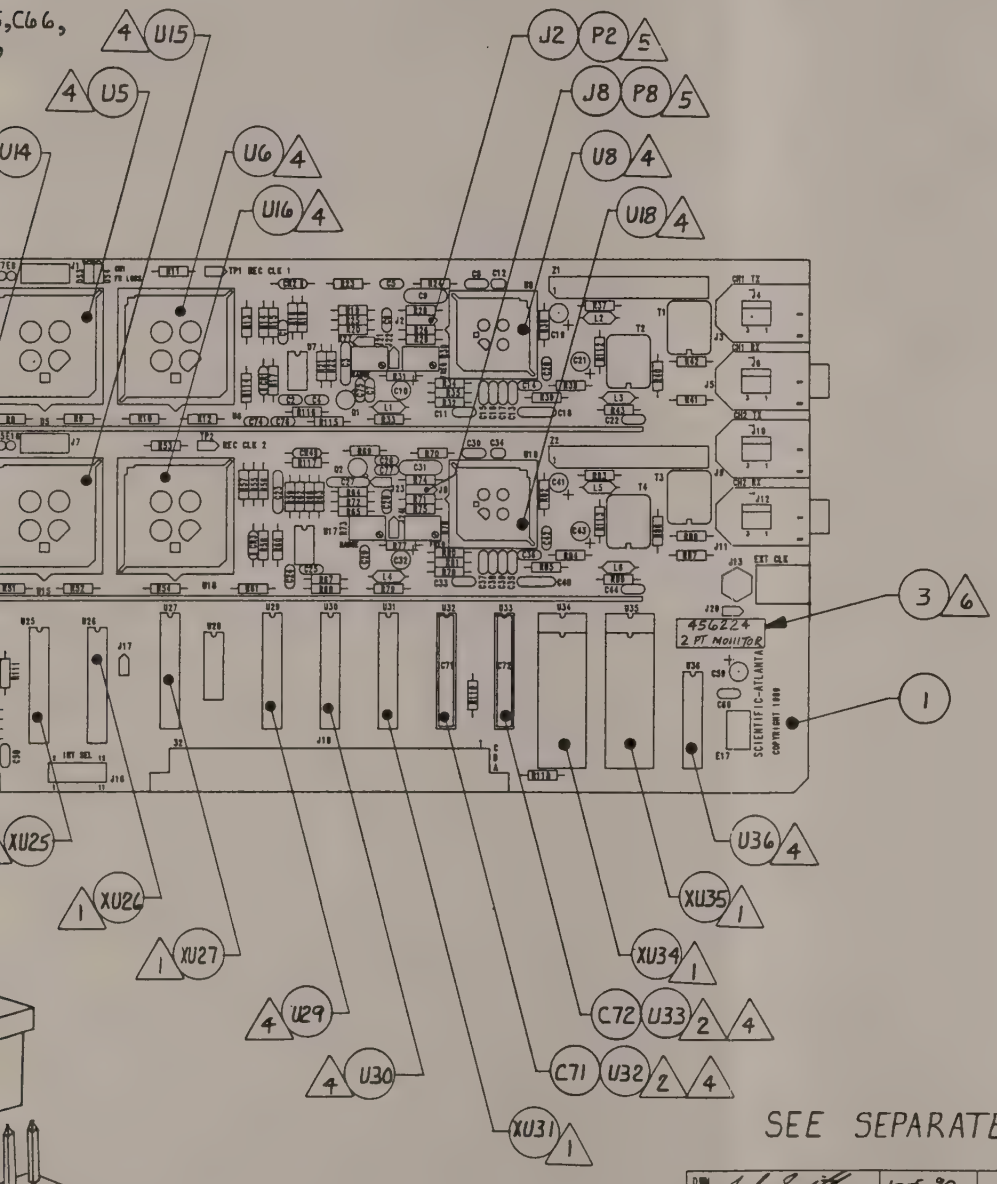

SEE SEPARATE PARTS LIST

DSN Jed Smith	10-5-90	Scientific Atlanta	
ENGR T.M. FABER	11-13-89	P.O. BOX 105027 ATLANTA, GA 30348	
CHK JANICE COKER	11-13-89	SUB-ASSY DSI 2 POINT MONITOR	
PROD S. THORMAN	2-7-90		
APVD BRENDA SPRINKLE	FSCM NO. 10110	SCALE 1/1	DWG. NO. 456224 REV A
SOURCE		SHEET 1 OF 2	

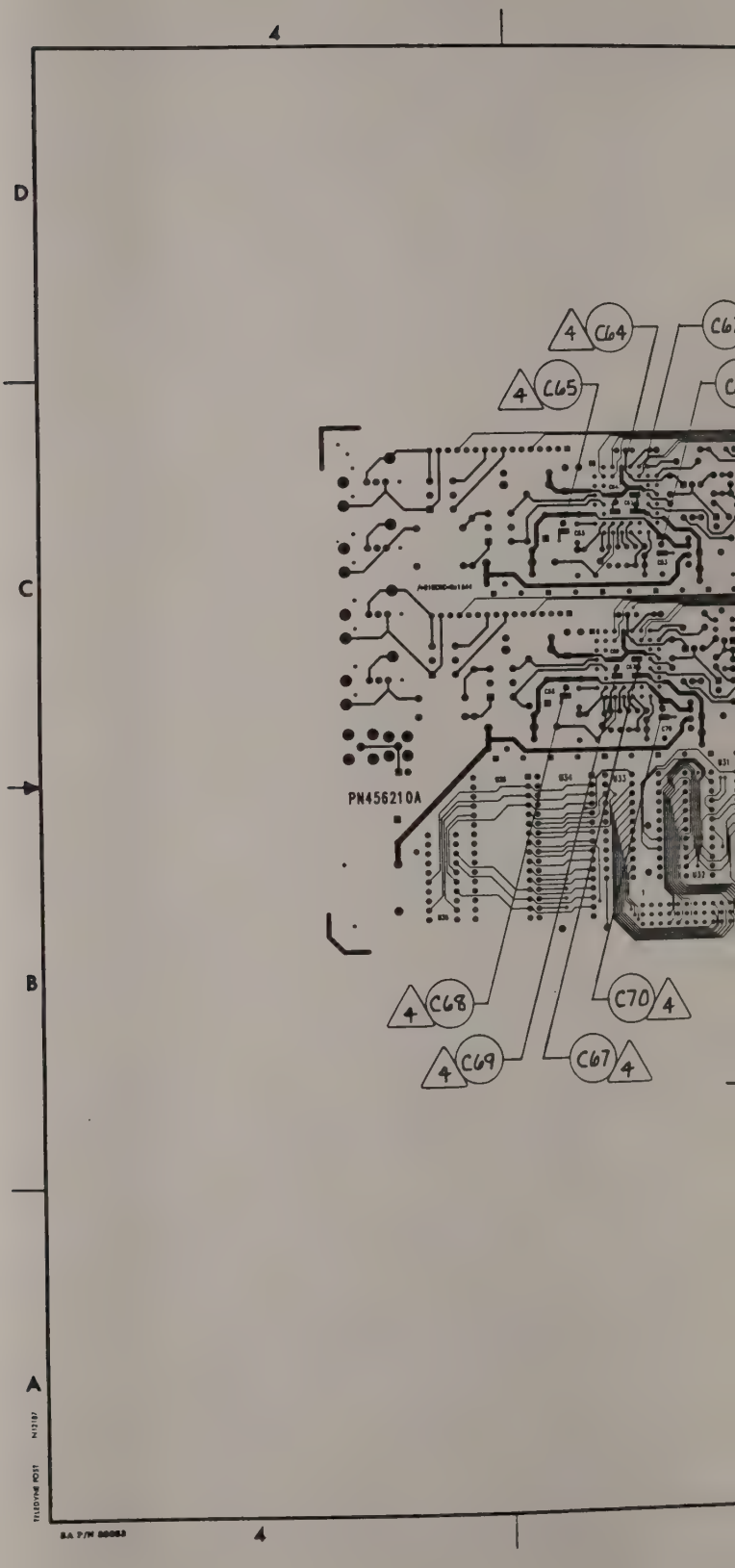
4
D
C
B
A
4
C64
C65
C68
C69
C70
C67
PN456210A

APPLICATION		
QTY REQD	NEXT ASSY	USED ON
1	456225	AT9000

REVISIONS				
ZONE	REV	DESCRIPTION	DATE	APPROVED
	A	SEE SH 1		

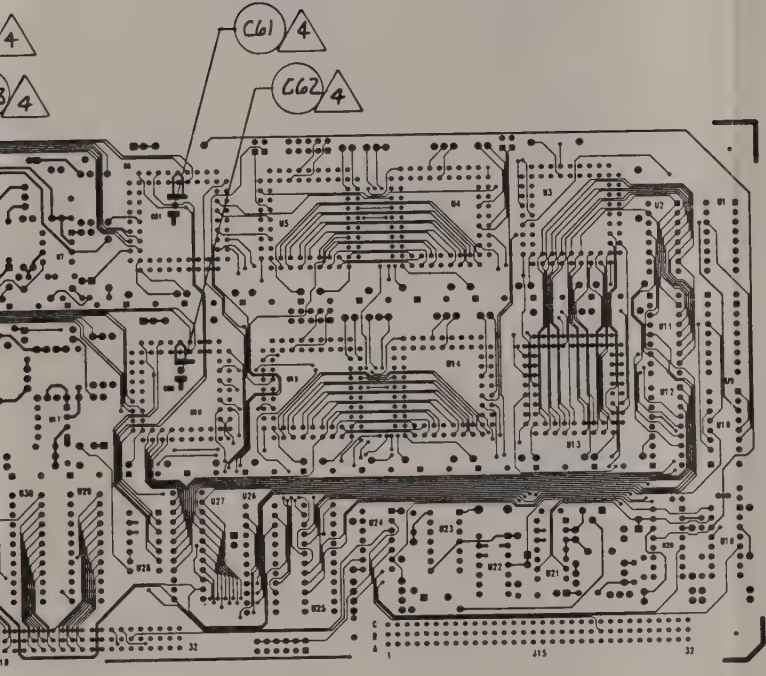

LAYER 4
PN458331

BACK VIEW

ITEM OR FIND NO	QTY REQD	S-A STOCK NO	NOMENCLATURE OR DESCRIPTION	MATL SPEC AND SIZE OR COMPONENT VALUE	IDENTIFYING OR PART NO	FSCM NO

PARTS LIST

UNLESS OTHERWISE SPECIFIED ALL CAPACITORS ARE IN MICROFARADS AND ALL RESISTORS ARE IN OHMS ±10% AND 1/4 WATT

LAST REFERENCE DESIGNATION USED

C CB J E
Q R S U

ALL DIMENSIONS ARE IN INCHES UNLESS OTHERWISE SPECIFIED

TOLERANCES
3 PLACE DECIMAL ± .005
2 PLACE DECIMAL ± .02
1 PLACE DECIMAL ± .1

FRACTIONS ± ANGLES 45° 30'

MAX SURFACE ROUGHNESS 125
ALL MACHINED SURFACES EXCEPT AS NOTED

BREAK SHARP EDGES AND CORNERS .010 MAX

FINISH

CONTRACT NO
DWN 10-5-90
ENGR
CHK
PROD
APVD
APVD

Scientific-Atlanta 3845 Pleasantdale Road Atlanta, Georgia 30340

SIZE	FSCM NO	DWG NO	REV
C	10110	456224	A

SCALE
SHEET 2

DWG NO 456224 SH 2 REV A

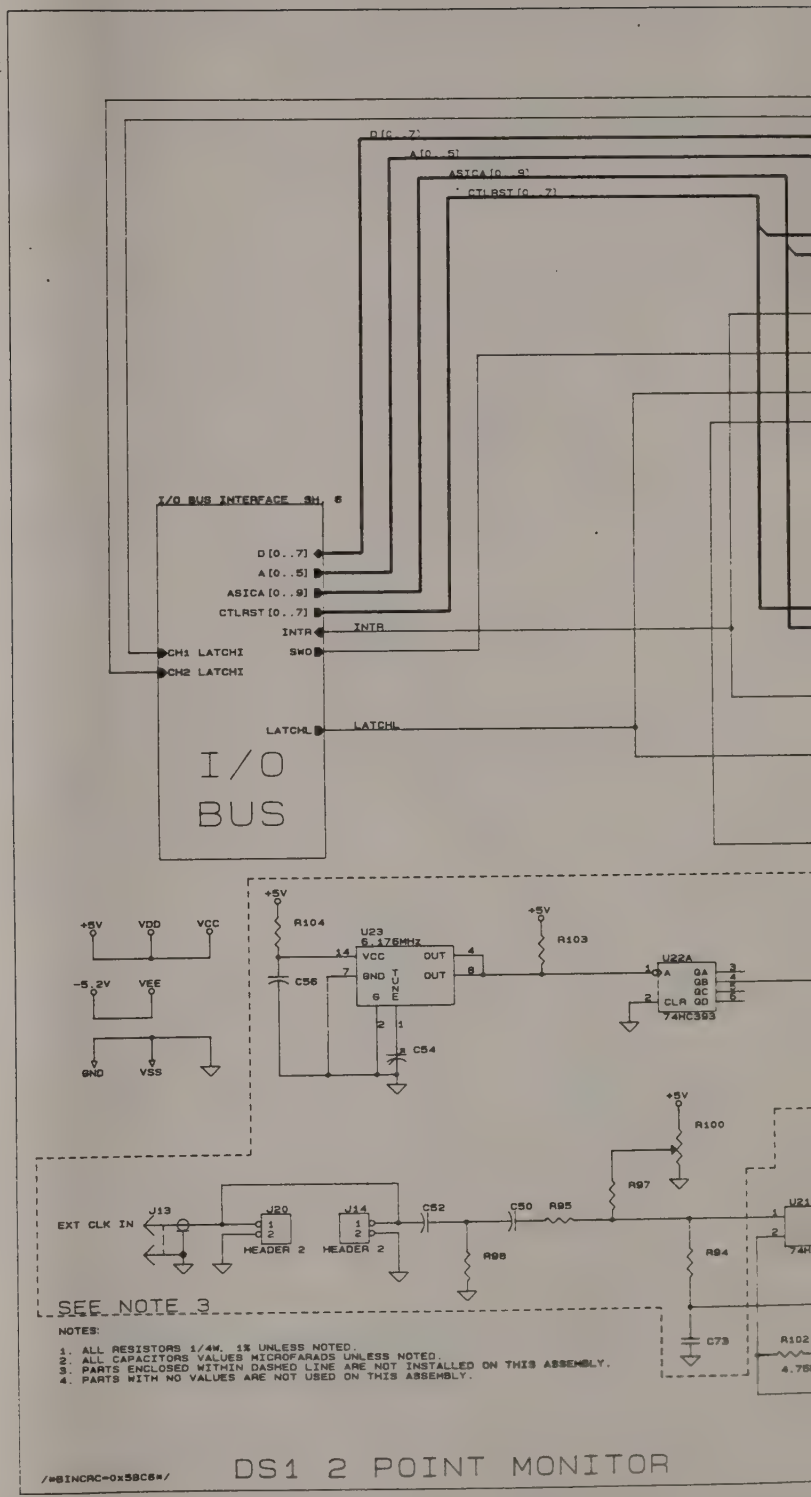
D[0..7]
A[0..5]
ASICA[0..9]
CTLRST[0..7]
I/O BUS INTERFACE SH. 6
D[0..7]
A[0..5]
ASICA[0..9]
CTLRST[0..7]
INTR
INTR
CH1 LATCHI
SWO
CH2 LATCHI
LATCHL
LATCHL
I/O
BUS
+5V
VDD
VCC
-5.2V
VEE
GND
VSS
+5V
R104
U23
6.176MHz
VCC
OUT
GND
TUNE
OUT
C56
C54
+5V
R103
U22A
74HC393
CLR
R100
R97
EXT CLK IN
J13
J20
HEADER 2
J14
HEADER 2
C52
C50
R95
R98
R94
C73
SEE NOTE 3
NOTES:
1. ALL RESISTORS 1/4W, 1% UNLESS NOTED.
2. ALL CAPACITORS VALUES MICROFARADS UNLESS NOTED.
3. PARTS ENCLOSED WITHIN DASHED LINE ARE NOT INSTALLED ON THIS ASSEMBLY.
4. PARTS WITH NO VALUES ARE NOT USED ON THIS ASSEMBLY.
/*$INCAC=0x58C6*/
DS1 2 POINT MONITOR

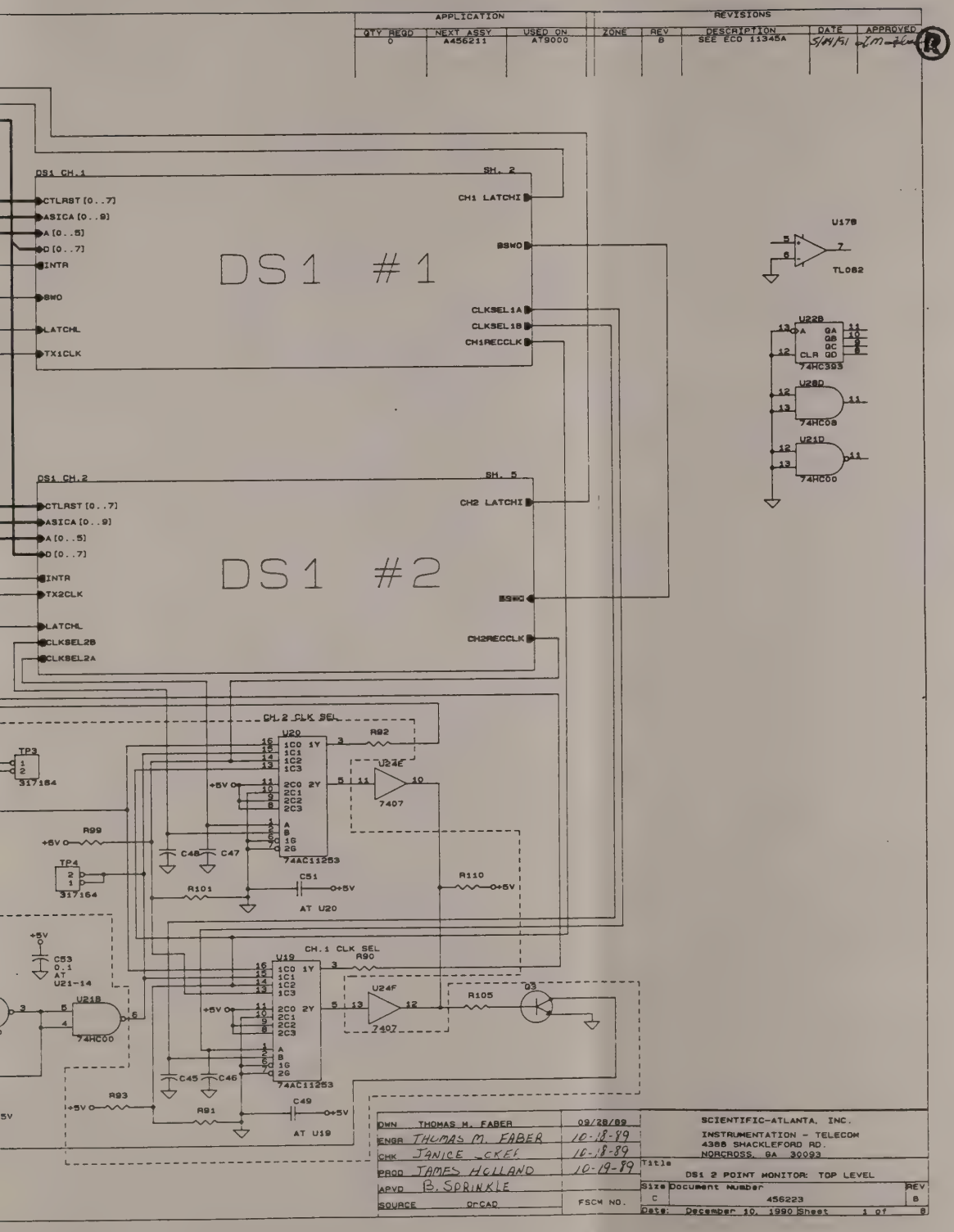
APPLICATION
QTY REQD 0
NEXT ASSY A456211
USED ON AT9000
REVISIONS
ZONE
REV B
DESCRIPTION SEE ECO 11345A
DATE 5/14/51
APPROVED
DS1 CH.1
CTLRST [0..7]
ASICA [0..9]
A [0..5]
D [0..7]
INTR
SWO
LATCHL
TX1CLK
DS1 #1
SH. 2
CH1 LATCHI
BSWO
CLKSEL1A
CLKSEL1B
CH1RECCLK
DS1 CH.2
CTLRST [0..7]
ASICA [0..9]
A [0..5]
D [0..7]
INTR
TX2CLK
LATCHL
CLKSEL2B
CLKSEL2A
DS1 #2
SH. 5
CH2 LATCHI
BSWO
CH2RECCLK
U17B
TL082
U22B
74HC393
U20D
74HC08
U21D
74HC00
CH.2 CLK SEL
U20
74AC11253
U24E
7407
R92
R99
R101
R110
C48
C47
C51
TP3
TP4
317184
317164
AT U20
CH.1 CLK SEL
U19
74AC11253
U24F
7407
R90
R105
Q3
C45
C46
C49
R93
R91
AT U19
C53
0.1
AT
U21-14
U21B
74HC00
THOMAS M. FABER 09/28/89
ENGR THOMAS M. FABER 10-18-89
CHK JANICE CKEL 10-18-89
PROD JAMES HOLLAND 10-19-89
APVD B. SPRINKLE
SOURCE OrCAD
FSCM NO.
SCIENTIFIC-ATLANTA, INC.
INSTRUMENTATION - TELECOM
4368 SHACKLEFORD RD.
NORCROSS, GA 30093
Title
DS1 2 POINT MONITOR: TOP LEVEL
Size C
Document Number 456223
REV B
Date: December 10, 1990 Sheet 1 of 8

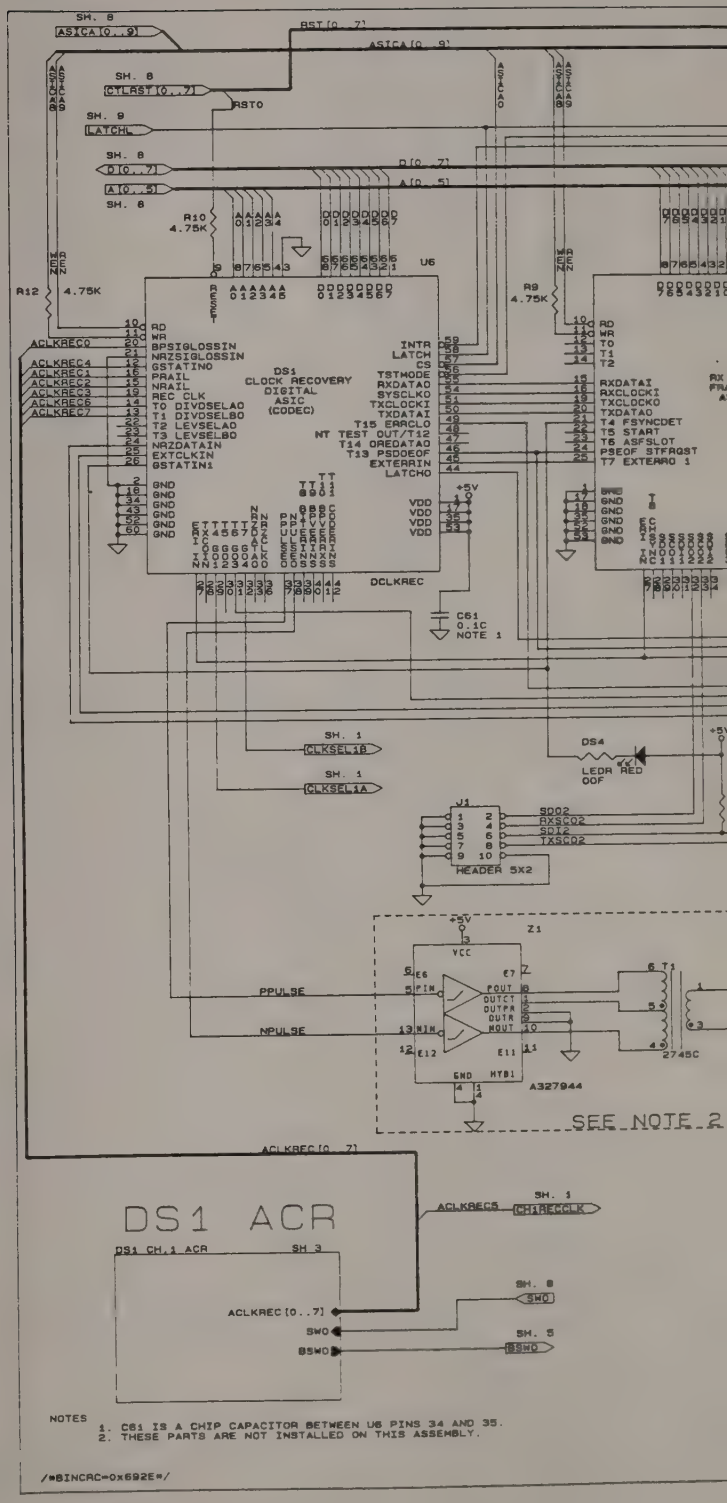

SH. 8
ASICA [0..9]
RST [0..7]
ASICA [0..9]
SH. 8
CTLRST [0..7]
RST0
SH. 9
LATCHL
SH. 8
D [0..7]
A [0..5]
SH. 8
R10
4.75K
R12
4.75K
U6
R9
4.75K
ACLKREC0
ACLKREC4
ACLKREC1
ACLKREC2
ACLKREC3
ACLKREC6
ACLKREC7
DS1
CLOCK RECOVERY
DIGITAL
ASIC
(CODEC)
DCLKREC
C61
0.1C
NOTE 1
SH. 1
CLKSEL1B
SH. 1
CLKSEL1A
DS4
LEDR RED
OOF
J1
HEADER 5X2
SDO2
RXSCO2
SDI2
TXSCO2
Z1
PPULSE
NPULSE
A327944
2745C
SEE NOTE 2
ACLKREC [0..7]
DS1 ACR
DS1 CH.1 ACR
SH 3
ACLKREC5
SH. 1
CH1RECCLK
SH. 8
SWO
SH. 5
BSWO
NOTES
1. C61 IS A CHIP CAPACITOR BETWEEN U6 PINS 34 AND 35.
2. THESE PARTS ARE NOT INSTALLED ON THIS ASSEMBLY.
/*BINCRC=0x692E*/

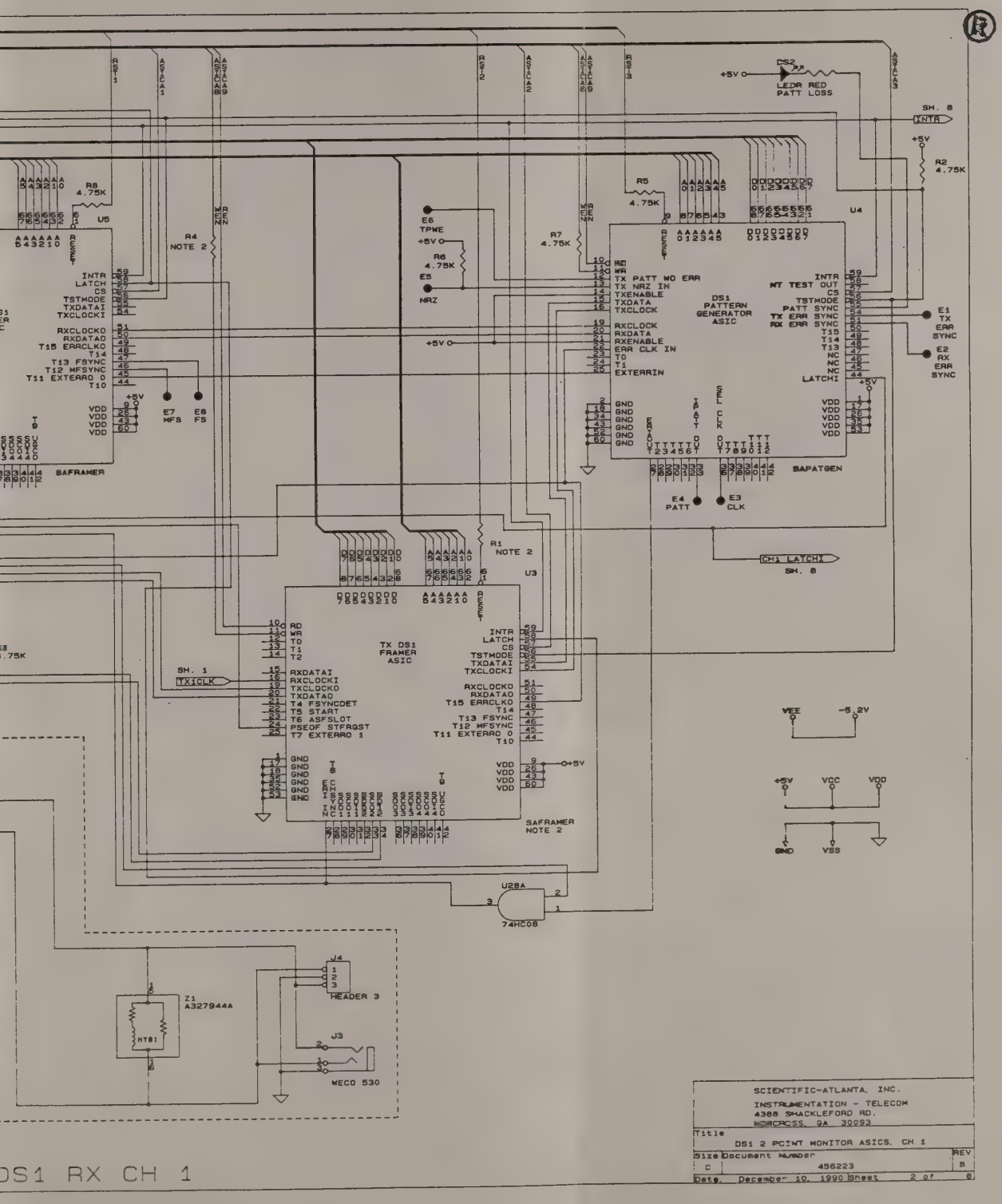
DS2
LED RED
PATT LOSS
+5V
SH. 8
XNTA
R2
4.75K
R5
4.75K
R8
4.75K
U5
R4
NOTE 2
R7
4.75K
R6
4.75K
E6
TPWE
E5
NRZ
U4
DS1
PATTERN
GENERATOR
ASIC
SAPATGEN
E1
TX
ERR
SYNC
E2
RX
ERR
SYNC
E4
PATT
E3
CLK
E7
MFS
E8
FS
SAFRAMER
R1
NOTE 2
U3
TX DS1
FRAMER
ASIC
SH. 1
TXICLK
SAFRAMER
NOTE 2
CH1 LATCHI
SH. 8
VEE
-5.2V
VCC
VDD
GND
VSS
U28A
74HC08
J4
HEADER 3
Z1
A327944A
J3
WECO 530
SCIENTIFIC-ATLANTA, INC.
INSTRUMENTATION - TELECOM
4386 SHACKLEFORD RD.
NORCROSS, GA 30093
Title
DS1 2 POINT MONITOR ASICS, CH 1
Size
C
Document Number
456223
REV
B
Date: December 10, 1990 Sheet 2 of 8

DS1 RX CH 1

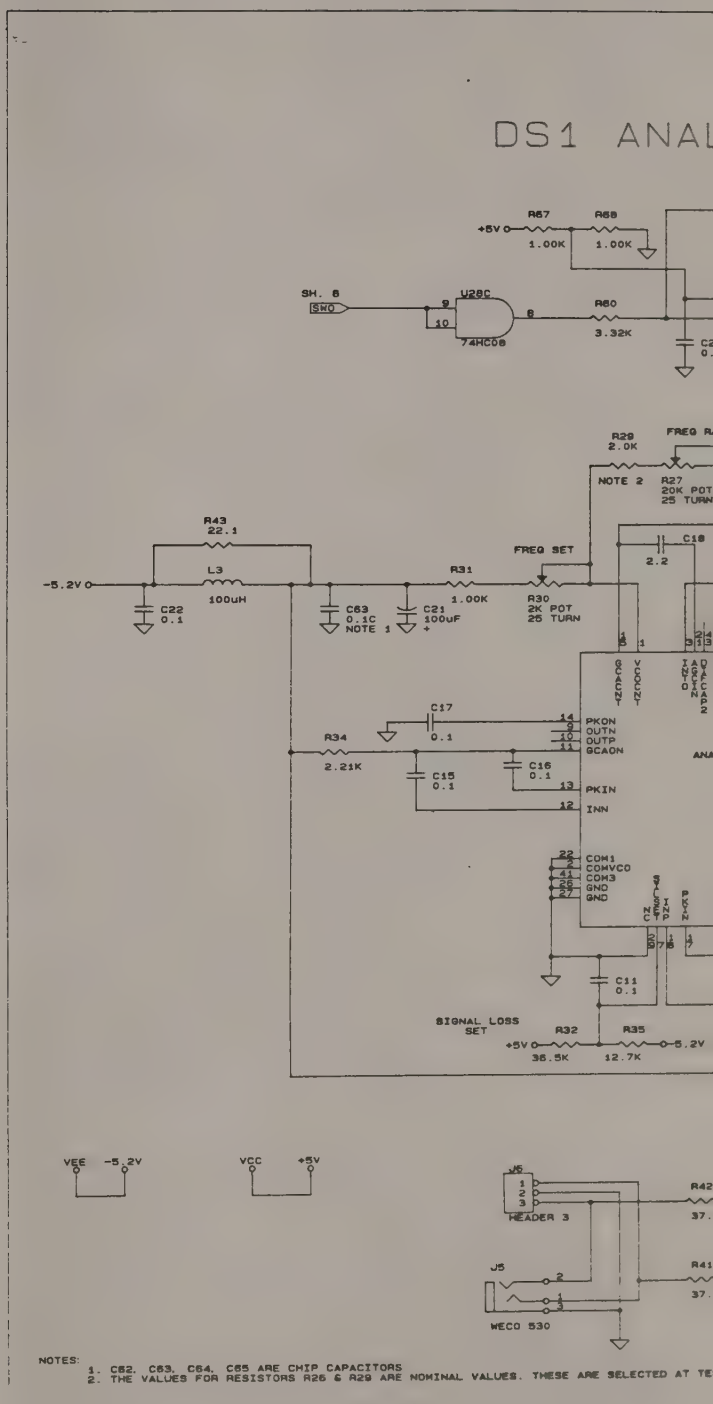
DS1 ANAL
R67
1.00K
R68
1.00K
+5V
SH. 6
SW0
U28C
74HC08
R60
3.32K
R29
2.0K
NOTE 2
R27
20K POT
25 TURN
FREQ SET
C18
2.2
R43
22.1
L3
100uH
-5.2V
C22
0.1
C63
0.1C
NOTE 1
C21
100uF
R31
1.00K
R30
2K POT
25 TURN
C17
0.1
R34
2.21K
C15
0.1
C16
0.1
PKON
OUTN
OUTP
GCAON
PKIN
INN
COM1
COMVCO
COM3
GND
GND
C11
0.1
SIGNAL LOSS
SET
R32
36.5K
R35
12.7K
-5.2V
VEE -5.2V
VCC +5V
J6
HEADER 3
J5
WECO 530
NOTES:
1. C62, C63, C64, C65 ARE CHIP CAPACITORS
2. THE VALUES FOR RESISTORS R26 & R29 ARE NOMINAL VALUES. THESE ARE SELECTED AT TE
/*$INCRC=0xFD1F*/

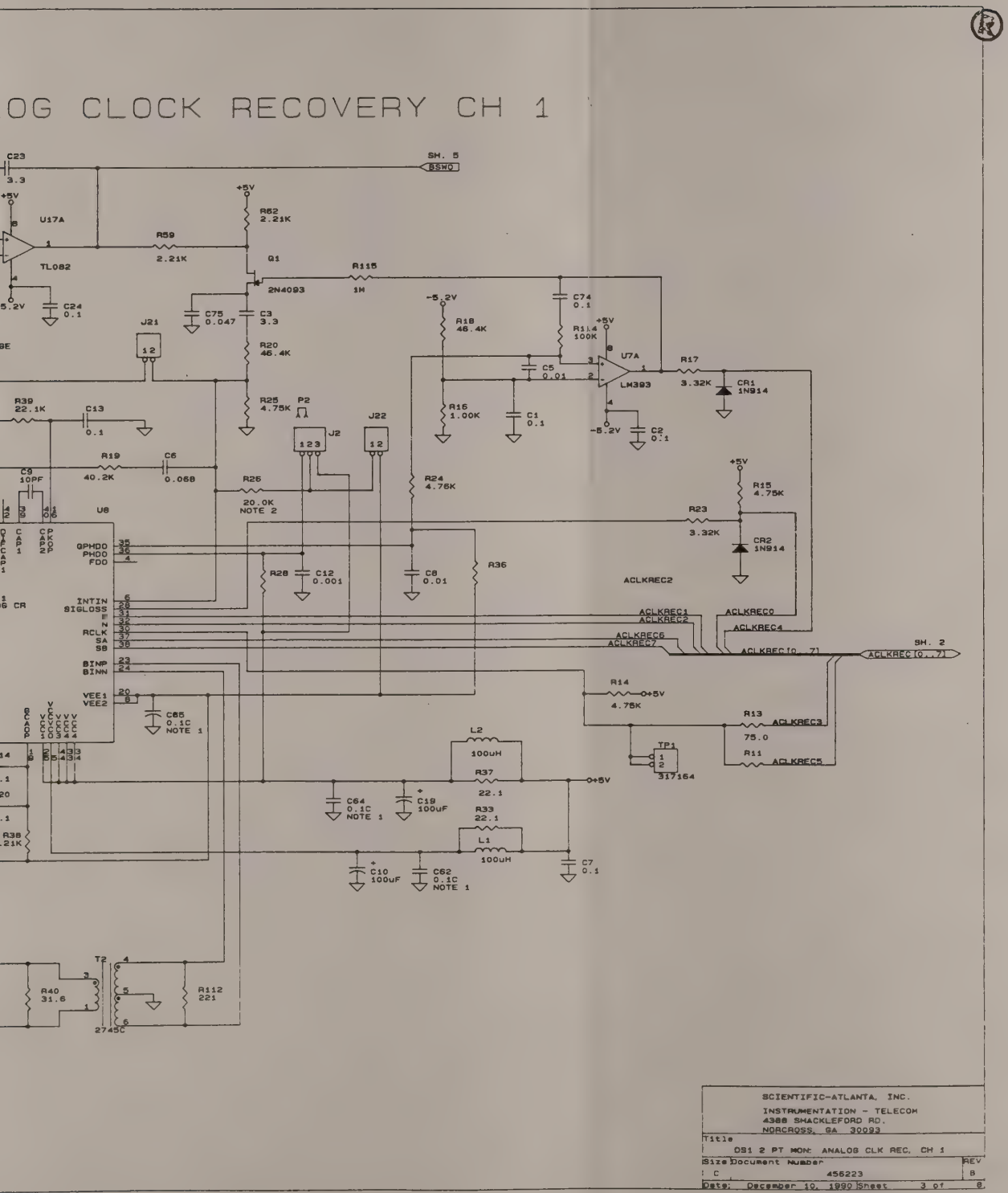

SCIENTIFIC-ATLANTA, INC. INSTRUMENTATION - TELECOM 4386 SHACKLEFORD RD. NORCROSS, GA 30093		
Title: DS1 2 PT MON: ANALOG CLK REC. CH 1		
Size: C	Document Number: 456223	REV: B
Date: December 10, 1990	Sheet: 3 of 8	

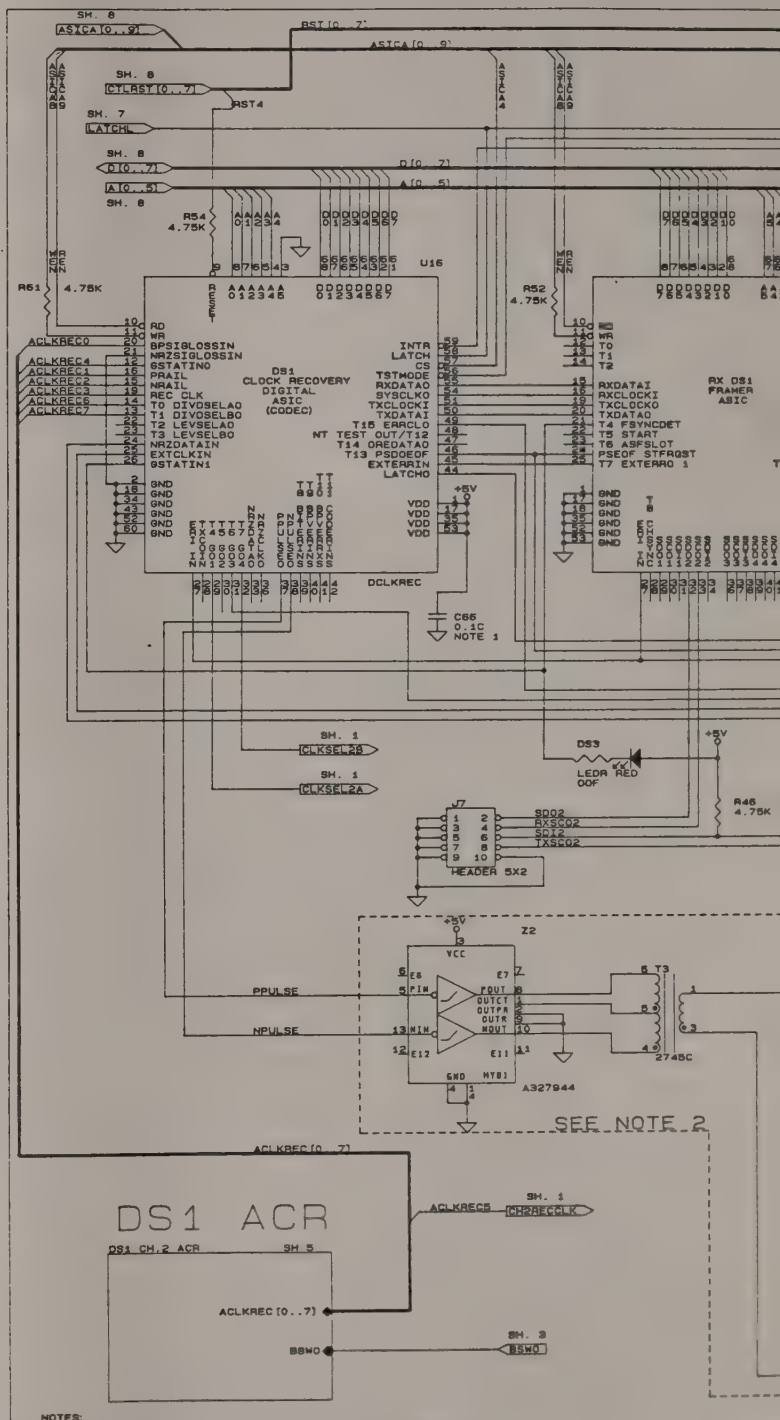
DS1 ACR
SEE NOTE 2
NOTES:
1. C66 IS A CHIP CAPACITOR BETWEEN U16 PINS 34 AND 35.
2. THESE PARTS ARE NOT INSTALLED ON THIS ASSEMBLY.
/*BINCRC=0x8D2C*/

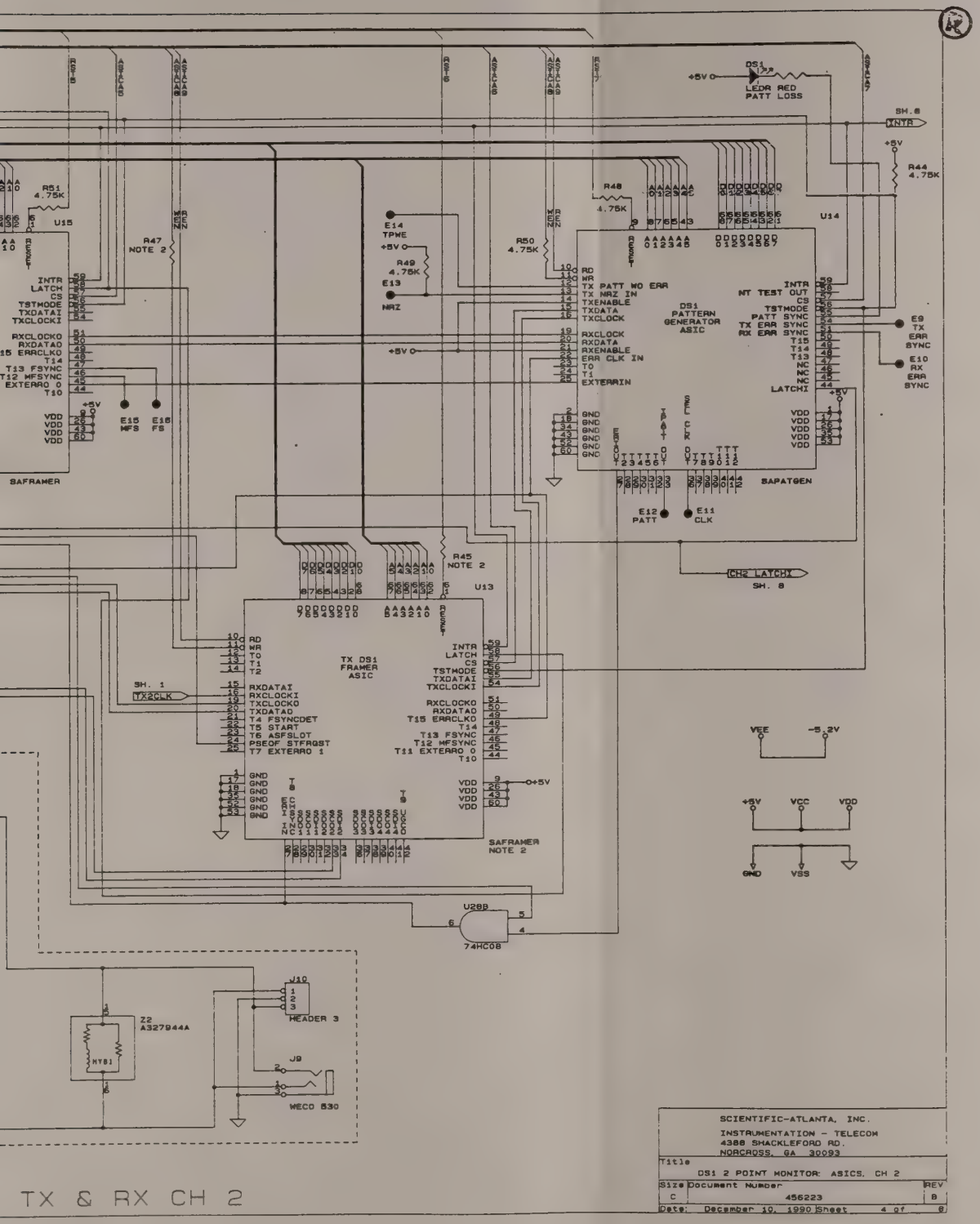
DS1
LEDR RED
PATT LOSS
SH. 8
INTR
R44
4.75K
R48
4.75K
R51
4.75K
U15
R47
NOTE 2
E14
TPWE
R49
4.75K
E13
NRZ
R50
4.75K
U14
DS1
PATTERN
GENERATOR
ASIC
SAPATGEN
E9
TX
ERR
SYNC
E10
RX
ERR
SYNC
E12
PATT
E11
CLK
SAFRAMER
E15
MFS
E16
FS
R45
NOTE 2
U13
CH2 LATCHI
SH. 8
TX DS1
FRAMER
ASIC
SH. 1
TX2CLK
SAFRAMER
NOTE 2
VEE
-5.2V
VCC
VDD
GND
VSS
U28B
74HC08
J10
HEADER 3
Z2
A327944A
J9
WECO 530
TX & RX CH 2
SCIENTIFIC-ATLANTA, INC.
INSTRUMENTATION - TELECOM
4388 SHACKLEFORD RD.
NORCROSS, GA 30093
Title
DS1 2 POINT MONITOR: ASICS, CH 2
Size
C
Document Number
456223
REV
B
Date: December 10, 1990
Sheet 4 of 8

DS1 ANAL

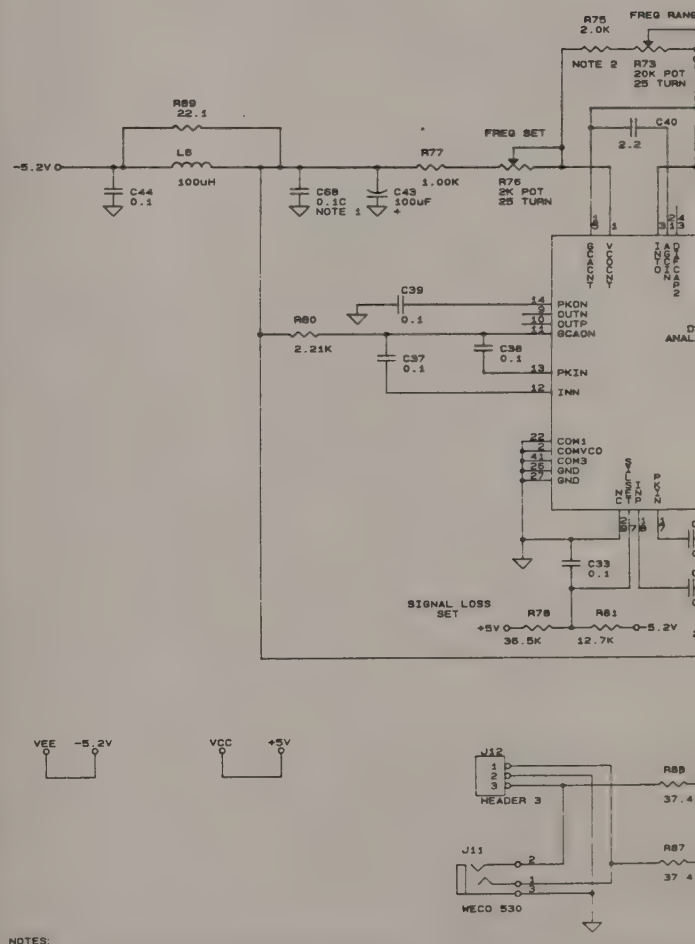

NOTES:
1. C67, C68, C69, C70 ARE CHIP CAPACITORS.
2. THE VALUES FOR RESISTORS R73 & R75 ARE NOMINAL VALUES. THESE ARE SELECTED AT TES

/*BINCRC=0xD138*/

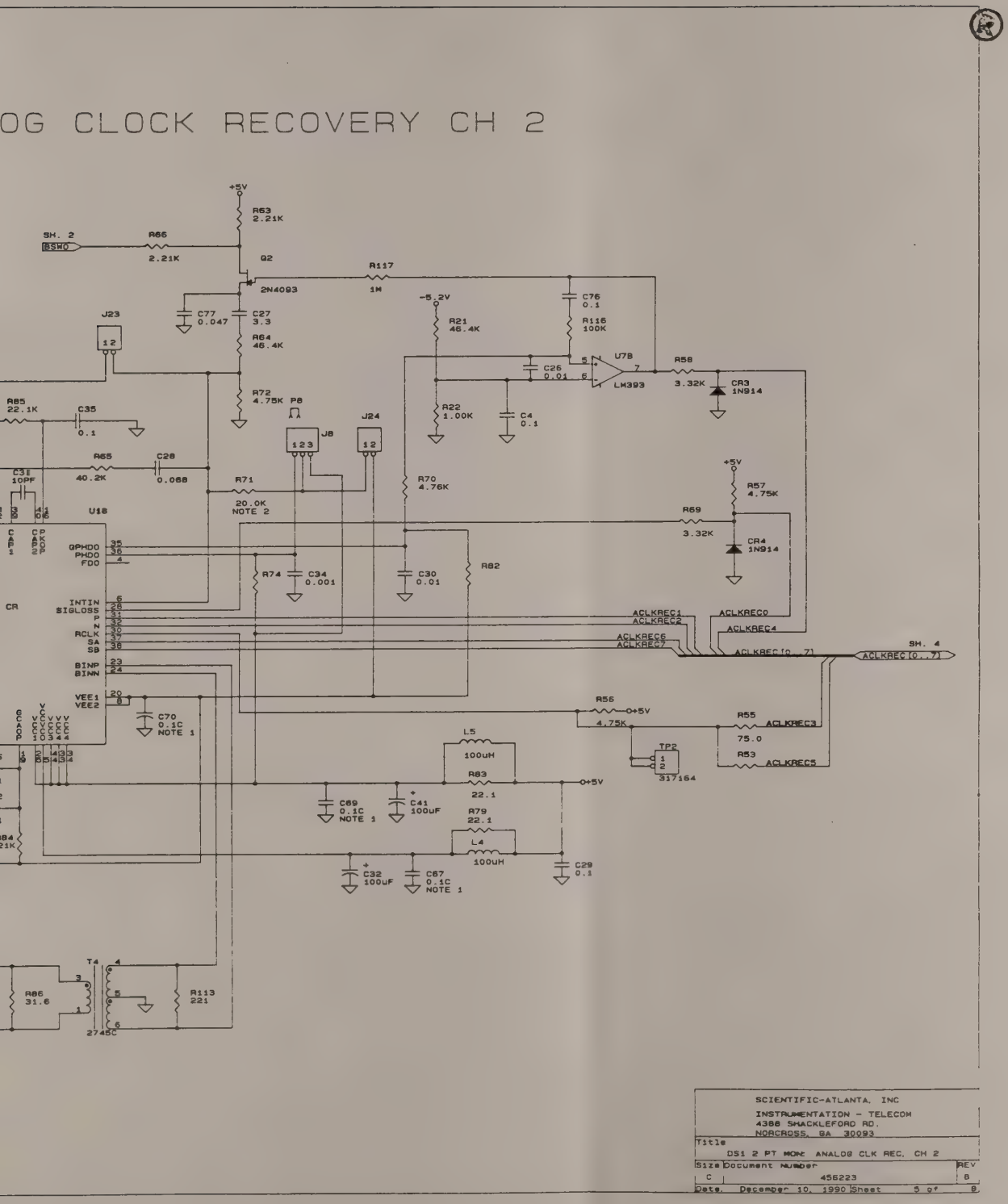

SCIENTIFIC-ATLANTA, INC INSTRUMENTATION - TELECOM 4386 SHACKLEFORD RD. NORCROSS, GA 30093		
Title: DS1 2 PT MONT ANALOG CLK REC. CH 2		
Size: C	Document Number: 456223	REV: B
Date: December 10, 1990	Sheet: 5 of 8	

2 POINT MO

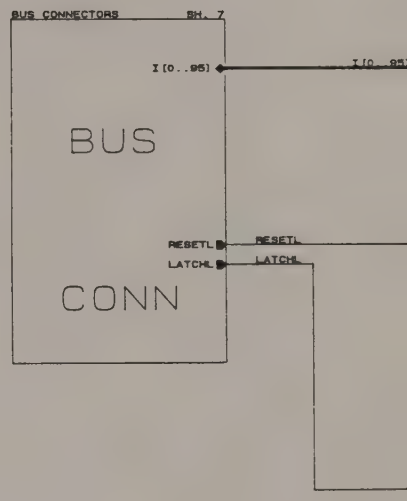

/*$INCRC=0xAFE8*/

NITOR BUS INTERFACE

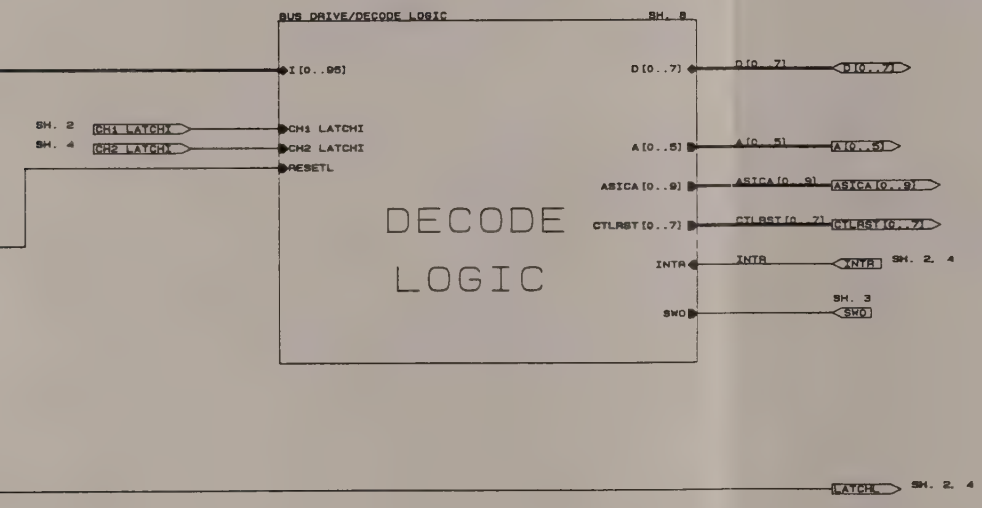

SCIENTIFIC-ATLANTA, INC. INSTRUMENTATION - TELECOM 4388 SHACKLEFORD RD. NORCROSS, GA 30093		
Title: DS1 2 POINT MONITOR: BUS INTERFACE		
Size: C	Document Number: 456223	REV: B
Date: December 10, 1990	Sheet 6 of 8	

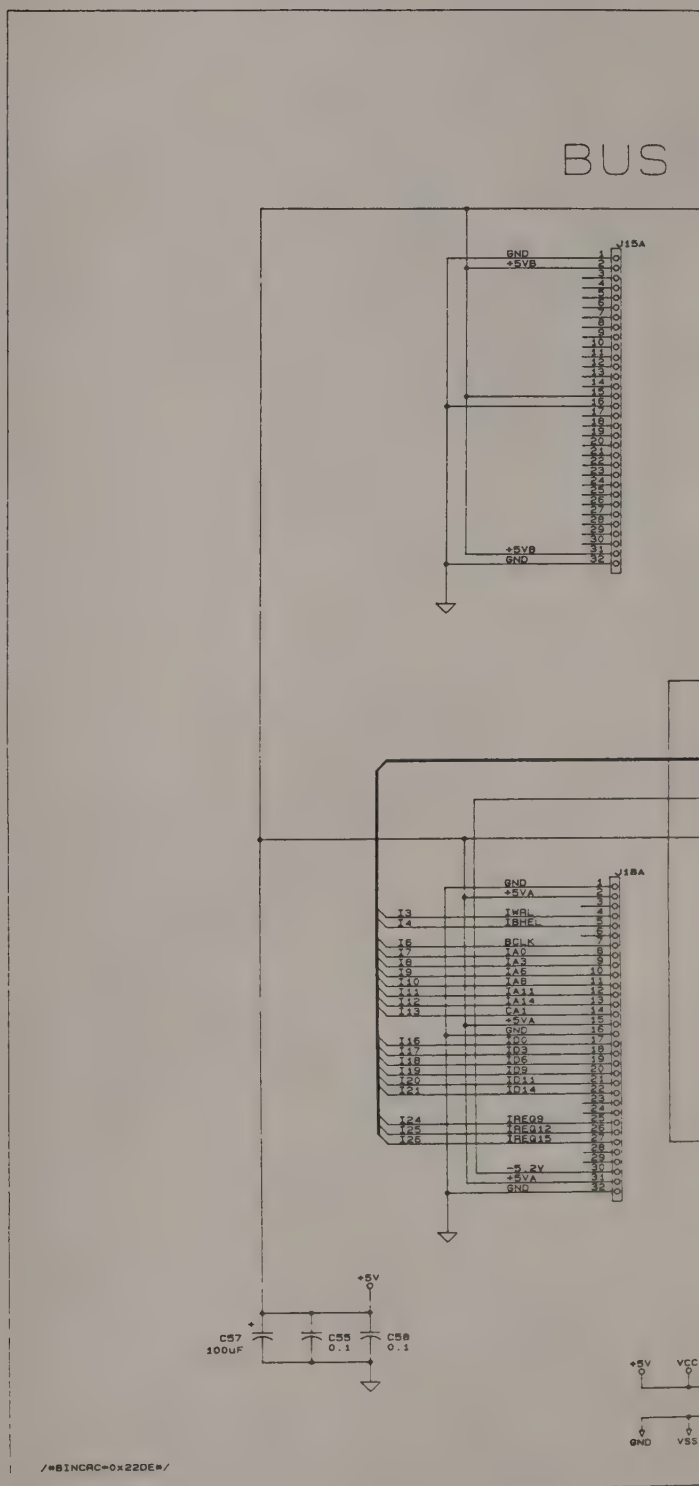
BUS
J15A
GND
+5VB
+5VB
GND
J18A
GND
+5VA
IWRL
IRMEL
BCLK
IA0
IA3
IA6
IA8
IA11
IA14
CA1
+5VA
GND
ID2
ID3
ID6
ID9
ID11
ID14
IREQ9
IREQ12
IREQ15
-5.2V
+5VA
GND
+5V
C57
100uF
C55
0.1
C58
0.1
+5V
VCC
GND
VSS
/*BINCAC=0x22DE*/

CONNECTORS

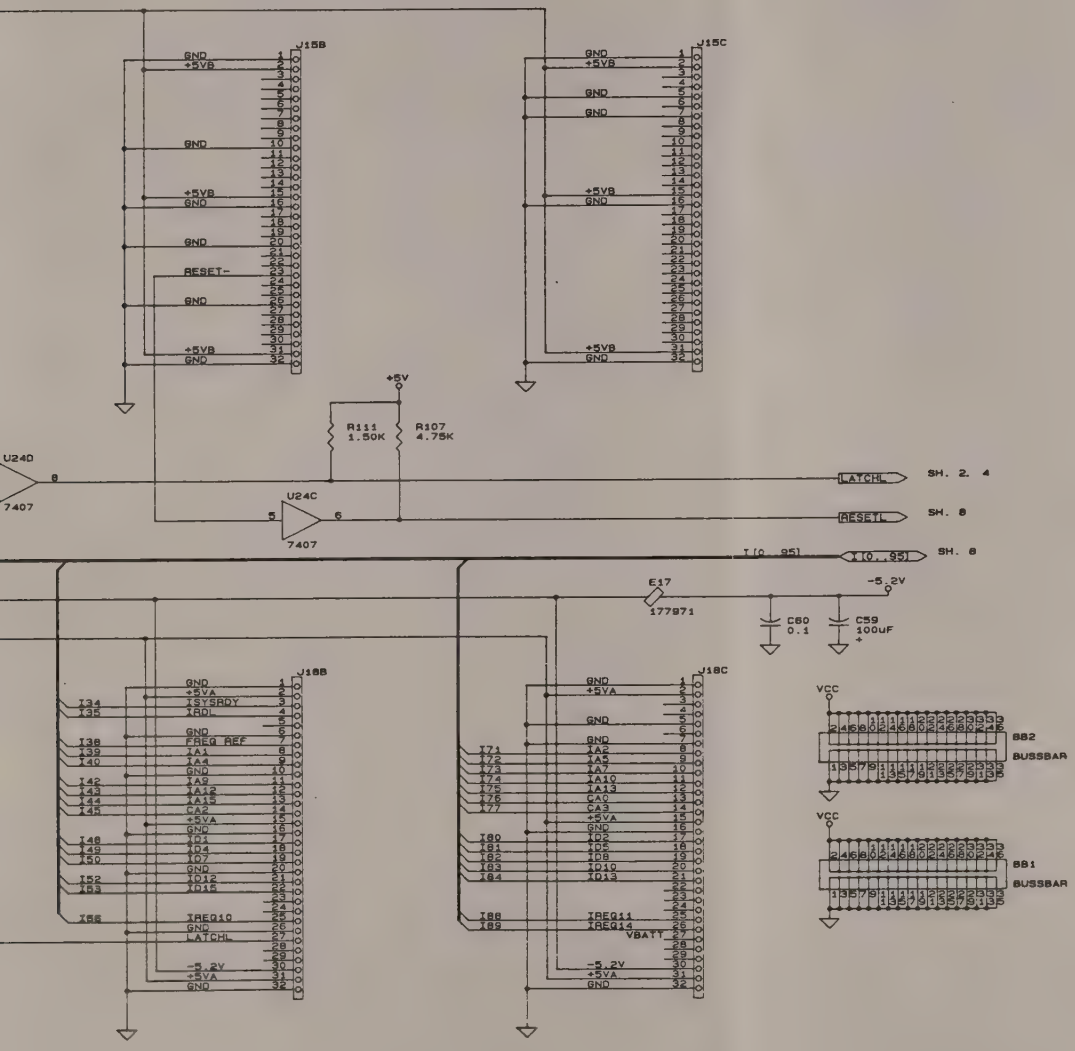

SCIENTIFIC-ATLANTA, INC.		
INSTRUMENTATION - TELECOM 4386 SHACKLEFORD RD. NORCROSS, GA 30093		
Title: DS1 2 POINT MONITOR: BUS CONNECTOR		
Size: C	Document Number: 456223	REV: B
Date: December 10, 1990	Sheet 7 of 8	

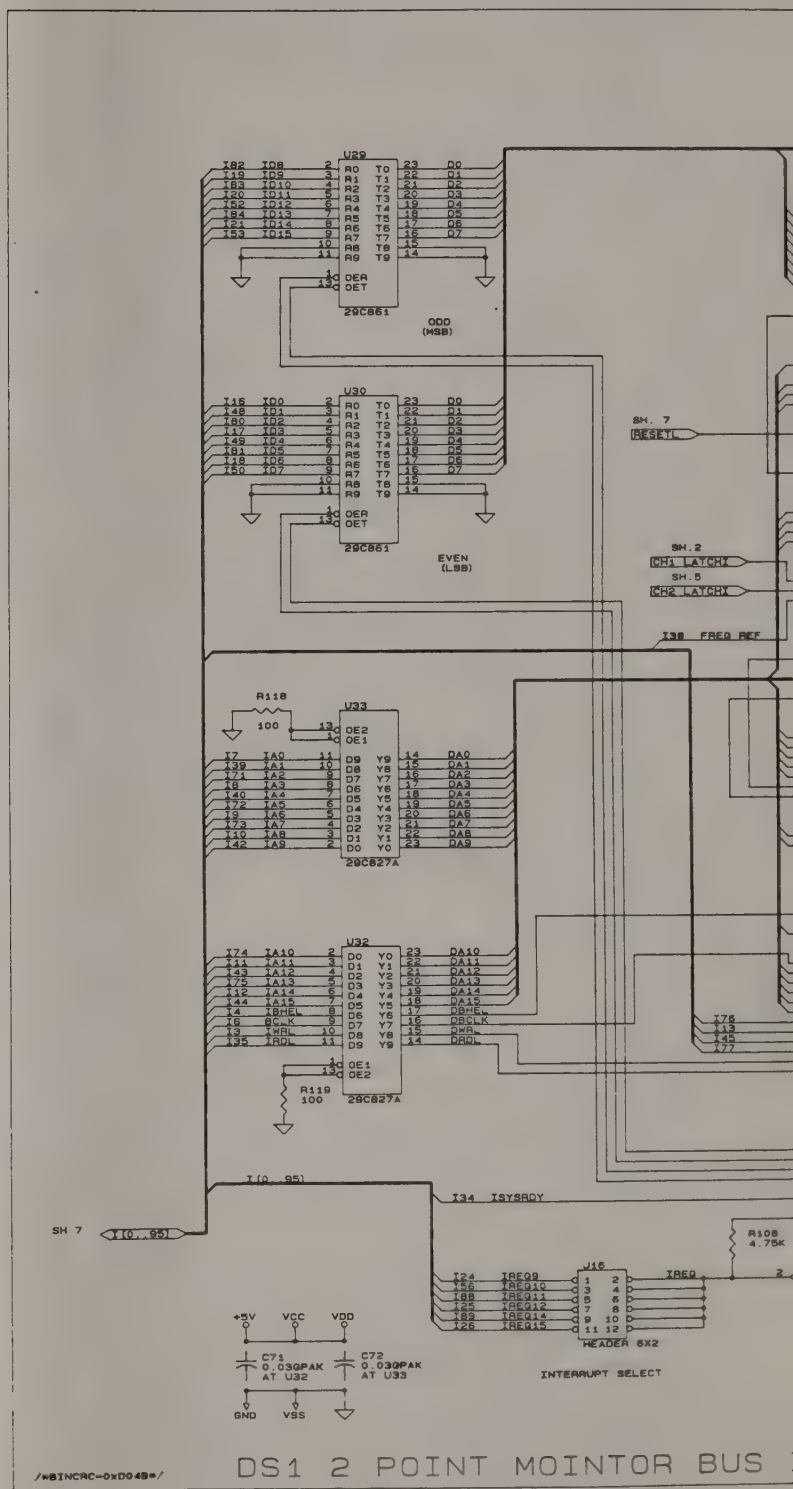
U29
29C861
ODD
(MSB)
U30
29C861
EVEN
(LSB)
SH. 7
RESETL
SH.2
CH1 LATCHX
SH.5
CH2 LATCHX
I38 FREQ REF
R118
100
U33
29C827A
U32
29C827A
R119
100
I(0..95)
SH 7
I(0..95)
I34 ISYSRDY
R108
4.75K
U16
HEADER 6X2
INTERRUPT SELECT
+5V
VCC
VDD
C71
0.03UPAK
AT U32
C72
0.03UPAK
AT U33
GND
VSS
/*$INCRC=0xD048*/
DS1 2 POINT MOINTOR BUS

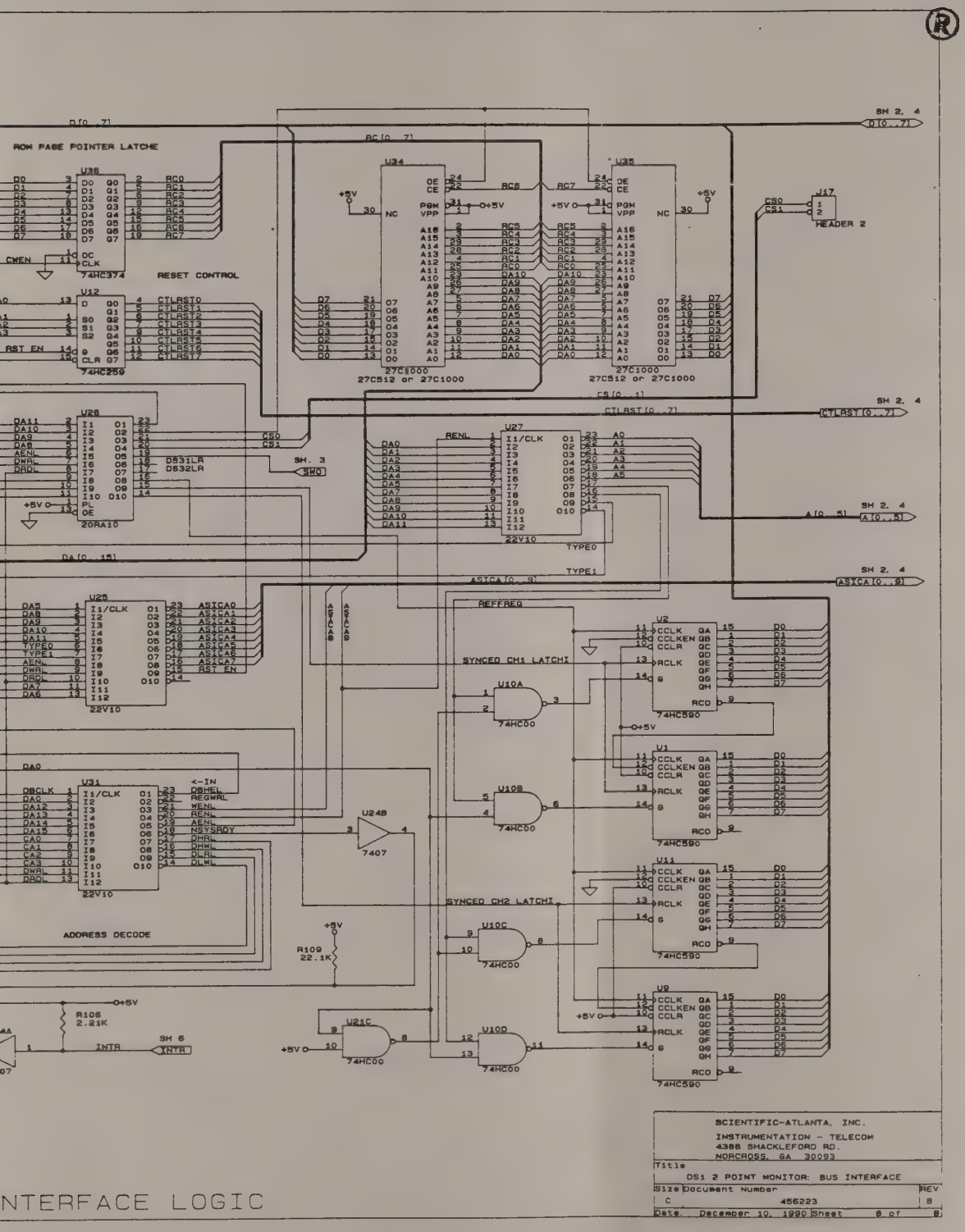

INTERFACE LOGIC

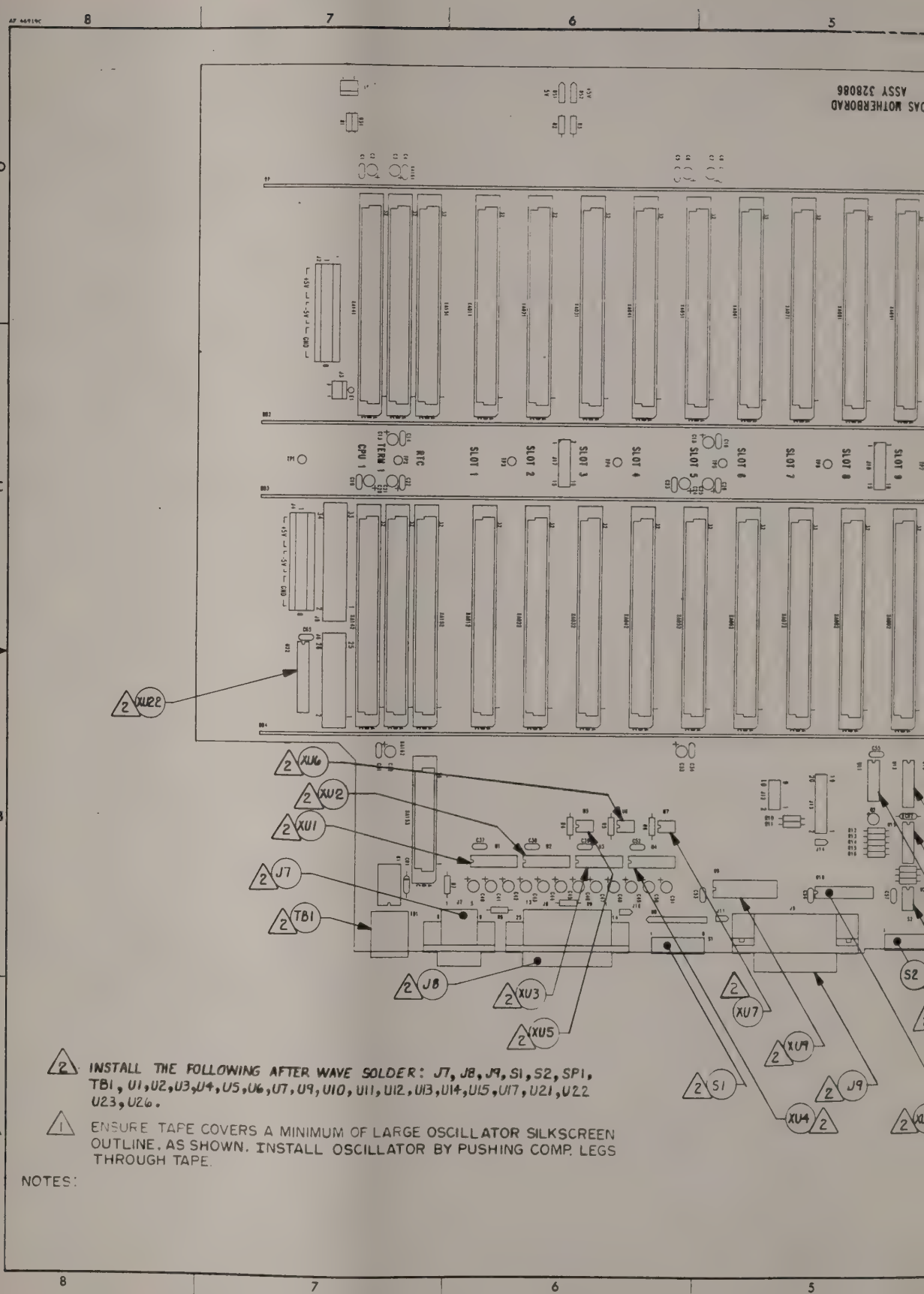

2 INSTALL THE FOLLOWING AFTER WAVE SOLDER: J7, J8, J9, S1, S2, SP1, TB1, U1, U2, U3, U4, U5, U6, U7, U9, U10, U11, U12, U13, U14, U15, U17, U21, U22 U23, U26.

1 ENSURE TAPE COVERS A MINIMUM OF LARGE OSCILLATOR SILKSCREEN OUTLINE. AS SHOWN. INSTALL OSCILLATOR BY PUSHING COMP. LEGS THROUGH TAPE.

NOTES:

DWG NO 328086 REV I A

APPLICATION		
QTY REQD	NEXT ASSY	USED ON
1	306200	AT9000

REVISIONS				
ZONE	REV		DATE	APPROVED
	-	INITIAL RELEASE ECO 10501	7/19/89	RLingar
	A	ECO 10879	11/30/90	[illegible]

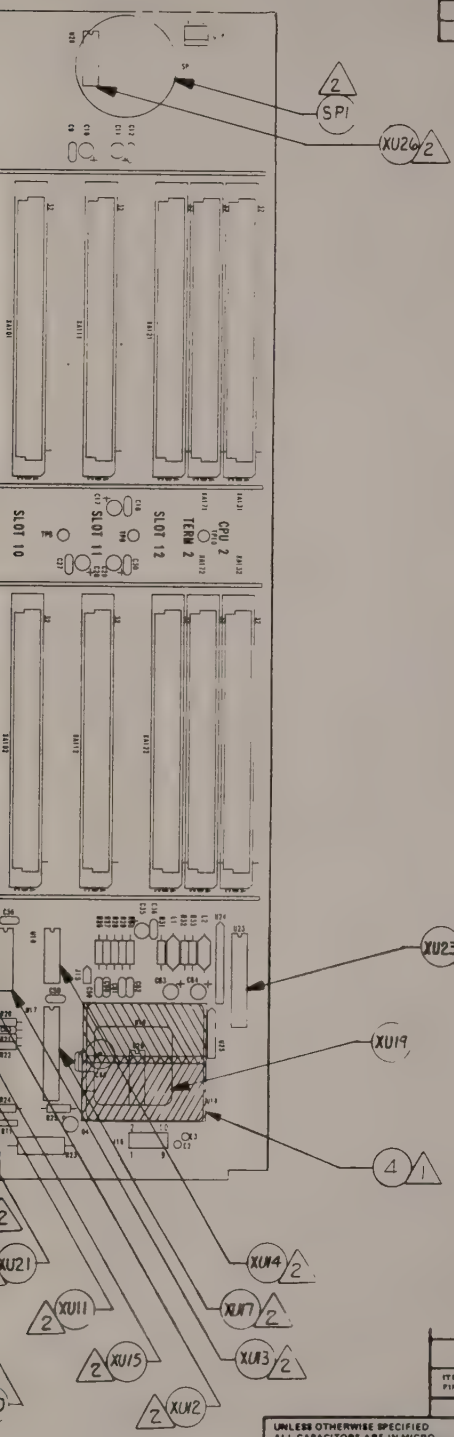

SEE SEPARATE PARTS LIST

ITEM OR FIND NO	QTY REQD	D-A STOCK NO	NOMENCLATURE OR DESCRIPTION	MATL SPEC AND SIZE OR COMPONENT VALUE	IDENTIFYING OR PART NO	FSCM NO

PARTS LIST

UNLESS OTHERWISE SPECIFIED ALL CAPACITORS ARE IN MICRO-FARADS AND ALL RESISTORS ARE IN OHMS, ±10% AND 1/4 WATT

LAST REFERENCE DESIGNATION USED

C	CR	J	K
Q	R	S	U

ALL DIMENSIONS ARE IN INCHES UNLESS OTHERWISE SPECIFIED

TOLERANCES

3 PLACE DECIMAL ±.005
2 PLACE DECIMAL ±.02
1 PLACE DECIMAL ±.1

FRACTIONS ± ANGLES ±0° 30'

MAX SURFACE ROUGHNESS 125 ALL MACHINED SURFACES EXCEPT AS NOTED

BREAK SHARP EDGES AND CORNERS .010 MAX

FINISH NONE

CONTRACT NO:

DSN	Ted Smith	4-12-89
ENGR	[illegible]	[illegible]
CHK	[illegible]	4-13-89
PROD	[illegible]	4-13-89
APVD	[illegible]	
APVD		

Scientific-Atlanta P.O. Box 105027 Atlanta, Georgia 30348

DAS MOTHERBOARD ASSEMBLY

SIZE	FSCM NO	DWG NO	REV
D	10110	328086	A

SCALE 1/1 SHEET 1 OF 1

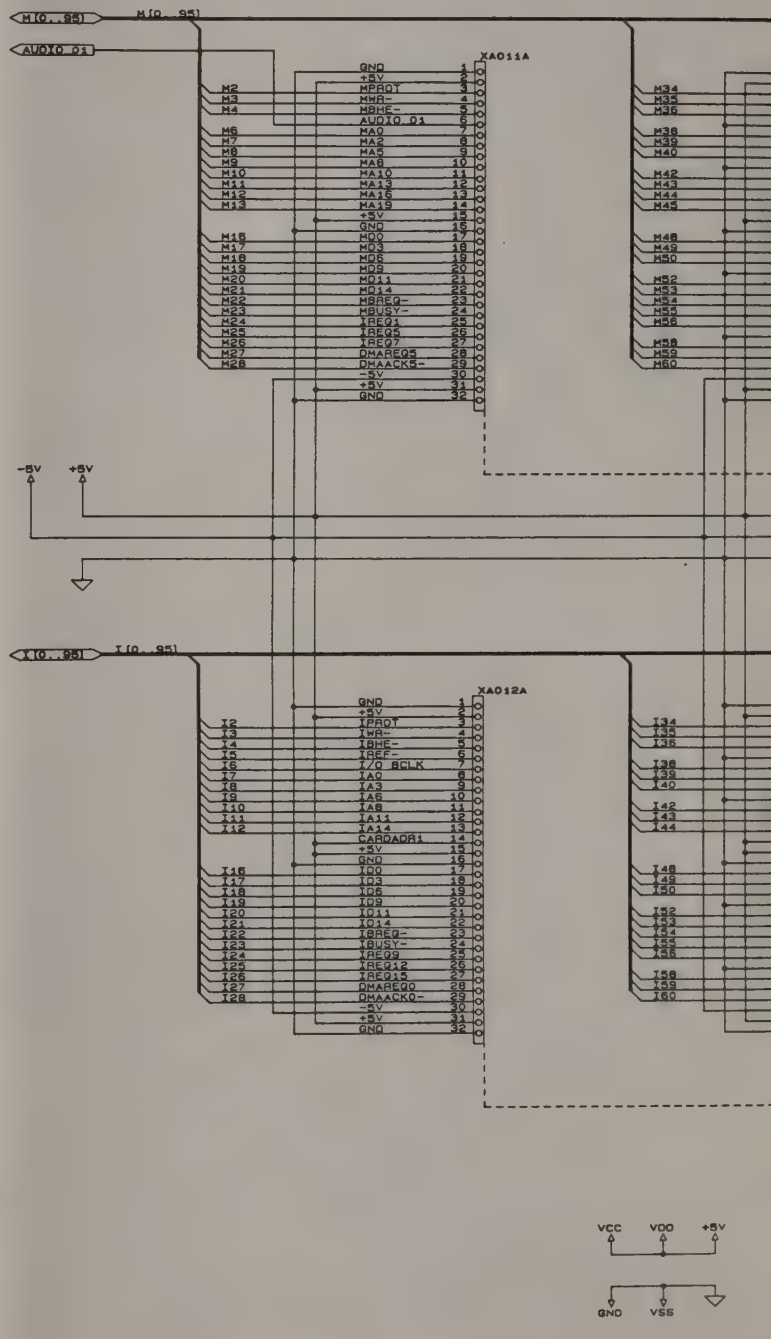
SLO
M[0..95]
AUDIO_01
XA011A
GND
+5V
MPROT
MWR-
MBHE-
AUDIO_01
MA0
MA2
MA5
MA8
MA10
MA13
MA16
MA19
+5V
GND
MD0
MD3
MD6
MD9
MD11
MD14
MBREQ-
MBUSY-
IREQ1
IREQ5
IREQ7
DMAREQ5
DMAACK5-
-5V
+5V
GND
M34
M35
M36
M38
M39
M40
M42
M43
M44
M45
M48
M49
M50
M52
M53
M54
M55
M56
M58
M59
M60
-5V
+5V
I[0..95]
XA012A
GND
+5V
IPROT
IWR-
IBHE-
IREF-
I/O_BCLK
IA0
IA3
IA6
IA9
IA11
IA14
CARDADR1
+5V
GND
ID0
ID3
ID6
ID9
ID11
ID14
IBREQ-
IBUSY-
IREQ9
IREQ12
IREQ15
DMAREQ0
DMAACK0-
-5V
+5V
GND
I34
I35
I36
I38
I39
I40
I42
I43
I44
I48
I49
I50
I52
I53
I54
I55
I56
I58
I59
I60
VCC
VDD
+5V
GND
VSS

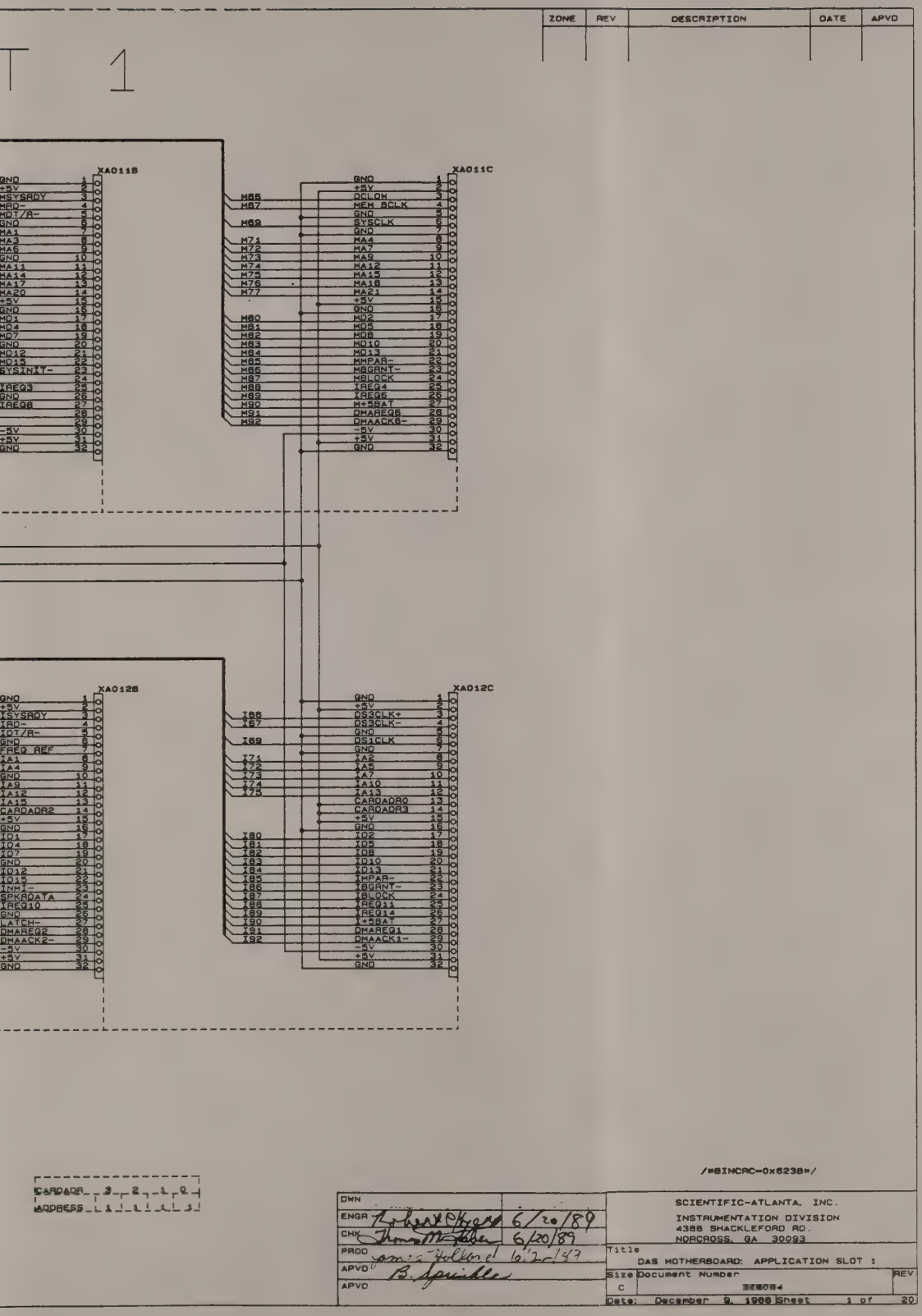
ZONE
REV
DESCRIPTION
DATE
APVD
T 1
XA011B
XA011C
XA012B
XA012C
GND
+5V
MSYSRDY
MRQ-
MDT/R-
MA1
MA3
MA6
MA11
MA14
MA17
MA20
MD1
MD4
MD7
MD12
MD15
SYSINIT-
IREQ3
IREQ8
-5V
M66
M67
M69
M71
M72
M73
M74
M75
M76
M77
M80
M81
M82
M83
M84
M85
M86
M87
M88
M89
M90
M91
M92
DCLOW
MEM BCLK
SYSCLK
MA4
MA7
MA9
MA12
MA15
MA18
MA21
MD2
MD5
MD8
MD10
MD13
MMPAR-
MBGRNT-
MBLOCK
IREQ4
IREQ6
M+5BAT
DMAREQ6
DMAACK6-
ISYSRDY
IRQ-
IDT/R-
FREQ REF
IA1
IA4
IA9
IA12
IA15
CARDADR2
ID1
ID4
ID7
ID12
ID15
INMI-
SPKRDATA
IREQ10
LATCH-
DMAREQ2
DMAACK2-
I66
I67
I69
I71
I72
I73
I74
I75
I80
I81
I82
I83
I84
I85
I86
I87
I88
I89
I90
I91
I92
DS3CLK+
DS3CLK-
DS1CLK
IA2
IA5
IA7
IA10
IA13
CARDADR0
CARDADR3
ID2
ID5
ID8
ID10
ID13
IMPAR-
IBGRNT-
IBLOCK
IREQ11
IREQ14
I+5BAT
DMAREQ1
DMAACK1-
CARDADR 3 2 1 0
ADDRESS 1 1 1 1
/*BINCRC-0x6238*/
DWN
ENGR
CHK
PROD
APVD
APVD
6/20/89
6/20/89
6/2/89
B. Sprinkle
SCIENTIFIC-ATLANTA, INC.
INSTRUMENTATION DIVISION
4388 SHACKLEFORD RD.
NORCROSS, GA 30093
Title
DAS MOTHERBOARD: APPLICATION SLOT 1
Size
C
Document Number
REV
Date: December 9, 1988
Sheet 1 of 20

SLO

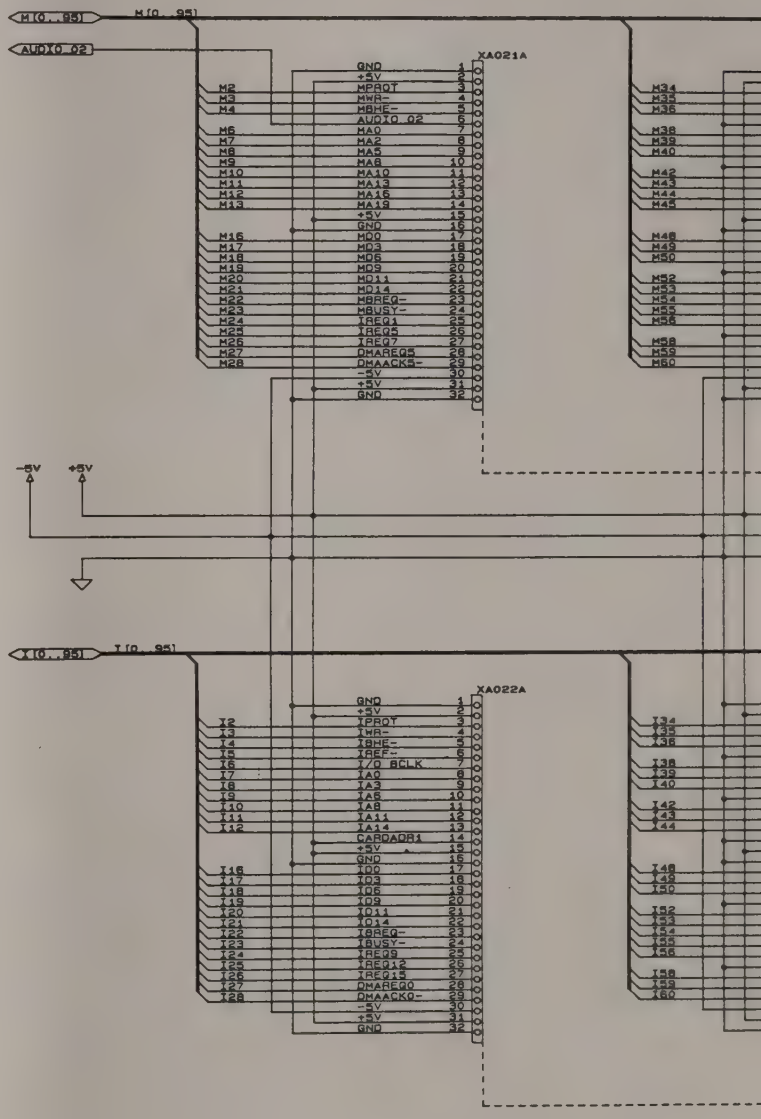
M[0..95]
AUDIO_02
XA021A
GND
+5V
MPROT
MWR-
MBHE-
AUDIO_02
MA0
MA2
MA5
MA8
MA10
MA13
MA16
MA19
+5V
GND
MD0
MD3
MD6
MD9
MD11
MD14
MBREQ-
MBUSY-
IREQ1
IREQ5
IREQ7
DMAREQ5
DMAACK5-
-5V
+5V
GND
-5V
+5V
I[0..95]
XA022A
GND
+5V
IPROT
IWR-
IBHE-
IREF-
I/O BCLK
IA0
IA3
IA6
IA8
IA11
IA14
CARDADR1
+5V
GND
ID0
ID3
ID6
ID9
ID11
ID14
IBREQ-
IBUSY-
IREQ9
IREQ12
IREQ15
DMAREQ0
DMAACK0-
-5V
+5V
GND

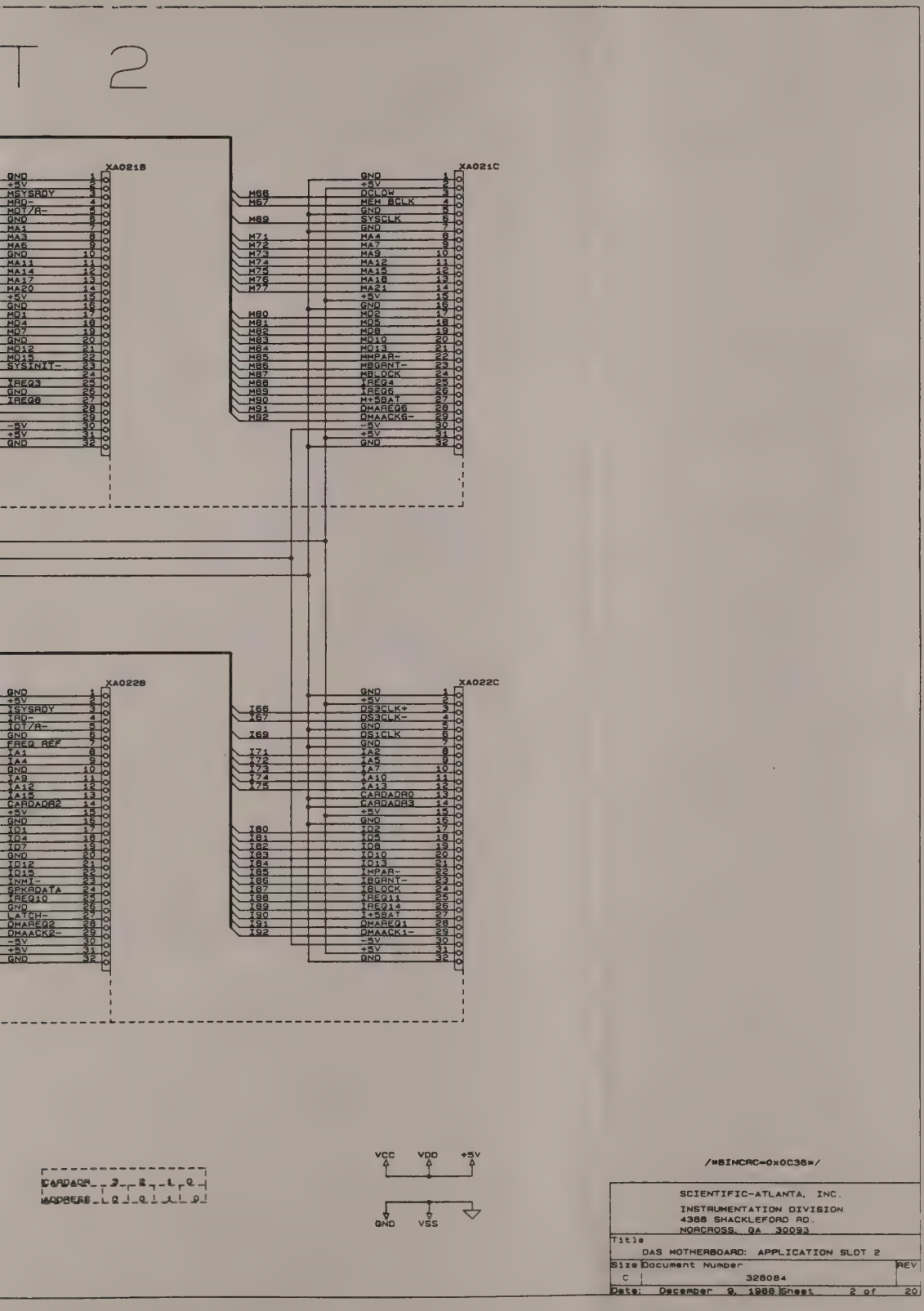
T 2
XA021B
XA021C
XA022B
XA022C
VCC
VDD
+5V
GND
VSS
/*$INCRC=0x0C36*/
SCIENTIFIC-ATLANTA, INC.
INSTRUMENTATION DIVISION
4386 SHACKLEFORD RD.
NORCROSS, GA 30093
Title
DAS MOTHERBOARD: APPLICATION SLOT 2
Size
Document Number
REV
C
328084
Date: December 9, 1988 Sheet 2 of 20

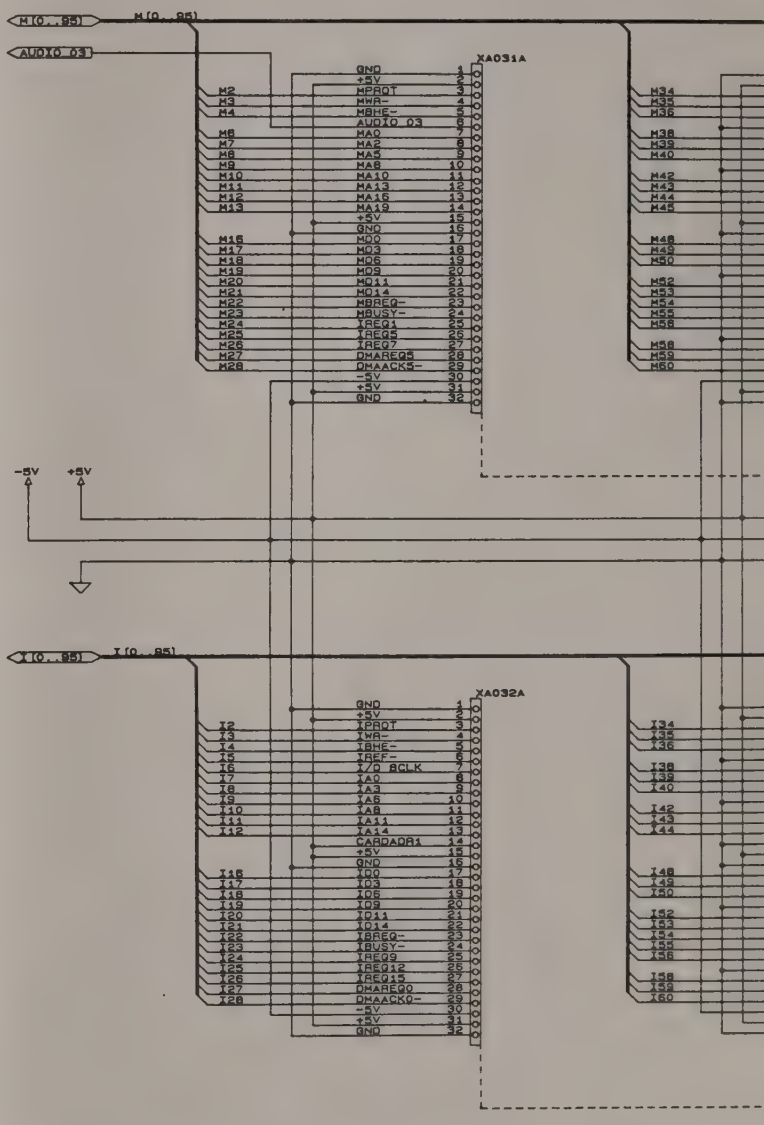
SLO
M[0..95]
AUDIO_03
XA031A
GND
+5V
MPROT
MWR-
MBHE-
AUDIO_03
MA0
MA2
MA5
MA8
MA10
MA13
MA15
MA19
+5V
GND
MD0
MD3
MD6
MD9
MD11
MD14
MBREQ-
MBUSY-
IREQ1
IREQ5
IREQ7
DMAREQ5
DMAACK5-
-5V
+5V
GND
-5V
+5V
I[0..95]
XA032A
GND
+5V
IPROT
IWR-
IBHE-
IREF-
I/O BCLK
IA0
IA3
IA6
IA8
IA11
IA14
CARDADR1
+5V
GND
ID0
ID3
ID6
ID9
ID11
ID14
IBREQ-
IBUSY-
IREQ9
IREQ12
IREQ15
DMAREQ0
DMAACK0-
-5V
+5V
GND

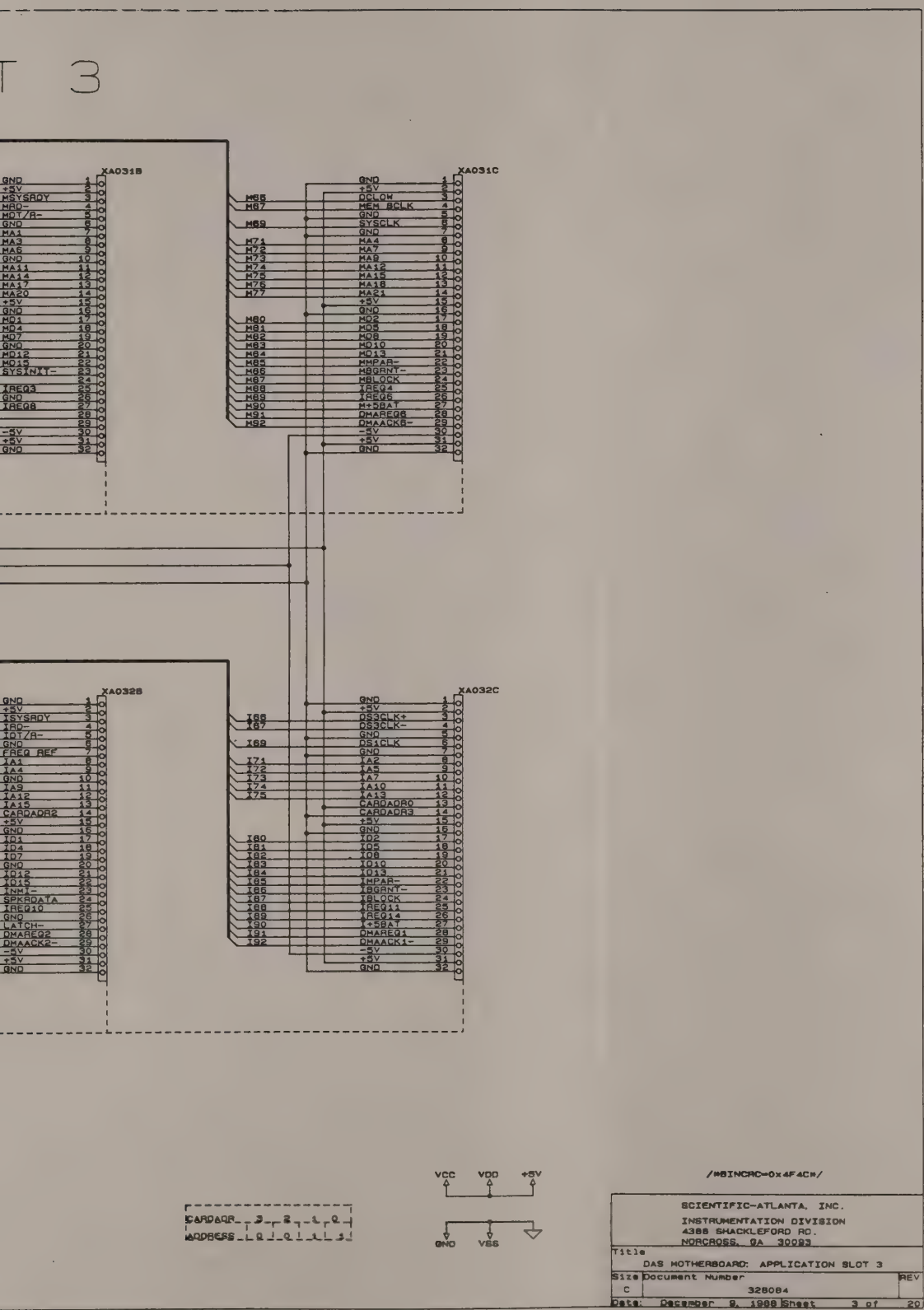
T 3
XA031B
XA031C
XA032B
XA032C
VCC
VDD
+5V
GND
VSS
CARDADR 3 2 1 0
ADDRESS 0 0 1 1
/*BINCRC=0x4F4C*/
SCIENTIFIC-ATLANTA, INC.
INSTRUMENTATION DIVISION
4386 SHACKLEFORD RD.
NORCROSS, GA 30093
Title
DAS MOTHERBOARD: APPLICATION SLOT 3
Size
C
Document Number
328084
REV
Date: December 9, 1988
Sheet 3 of 20

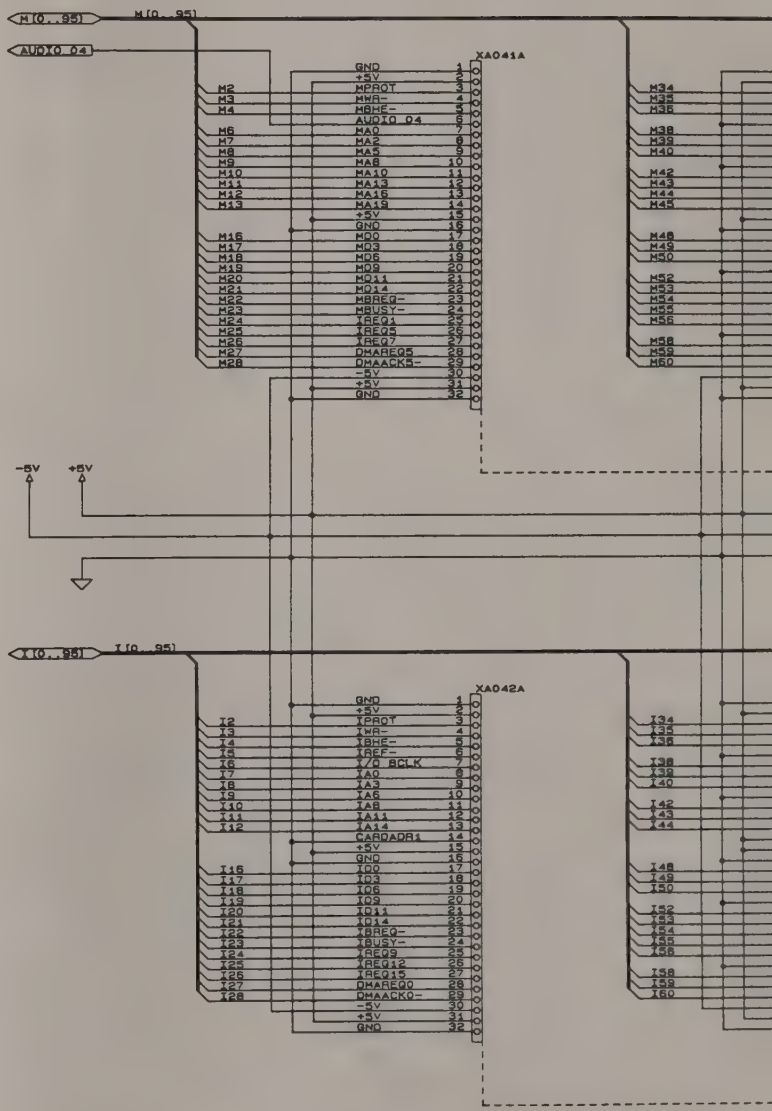
SLO
M[0..95]
AUDIO_04
XA041A
GND
+5V
MPROT
MWR-
MBHE-
AUDIO_04
MA0
MA2
MA5
MA8
MA10
MA13
MA16
MA19
+5V
GND
MD0
MD3
MD6
MD9
MD11
MD14
MBREQ-
MBUSY-
IREQ1
IREQ5
IREQ7
DMAREQ5
DMAACK5-
-5V
+5V
GND
-5V
+5V
I[0..95]
XA042A
GND
+5V
IPROT
IWR-
IBHE-
IREF-
I/O_RCLK
IA0
IA3
IA6
IA8
IA11
IA14
CARDADR1
+5V
GND
ID0
ID3
ID6
ID9
ID11
ID14
IBREQ-
IBUSY-
IREQ9
IREQ12
IREQ15
DMAREQ0
DMAACK0-
-5V
+5V
GND

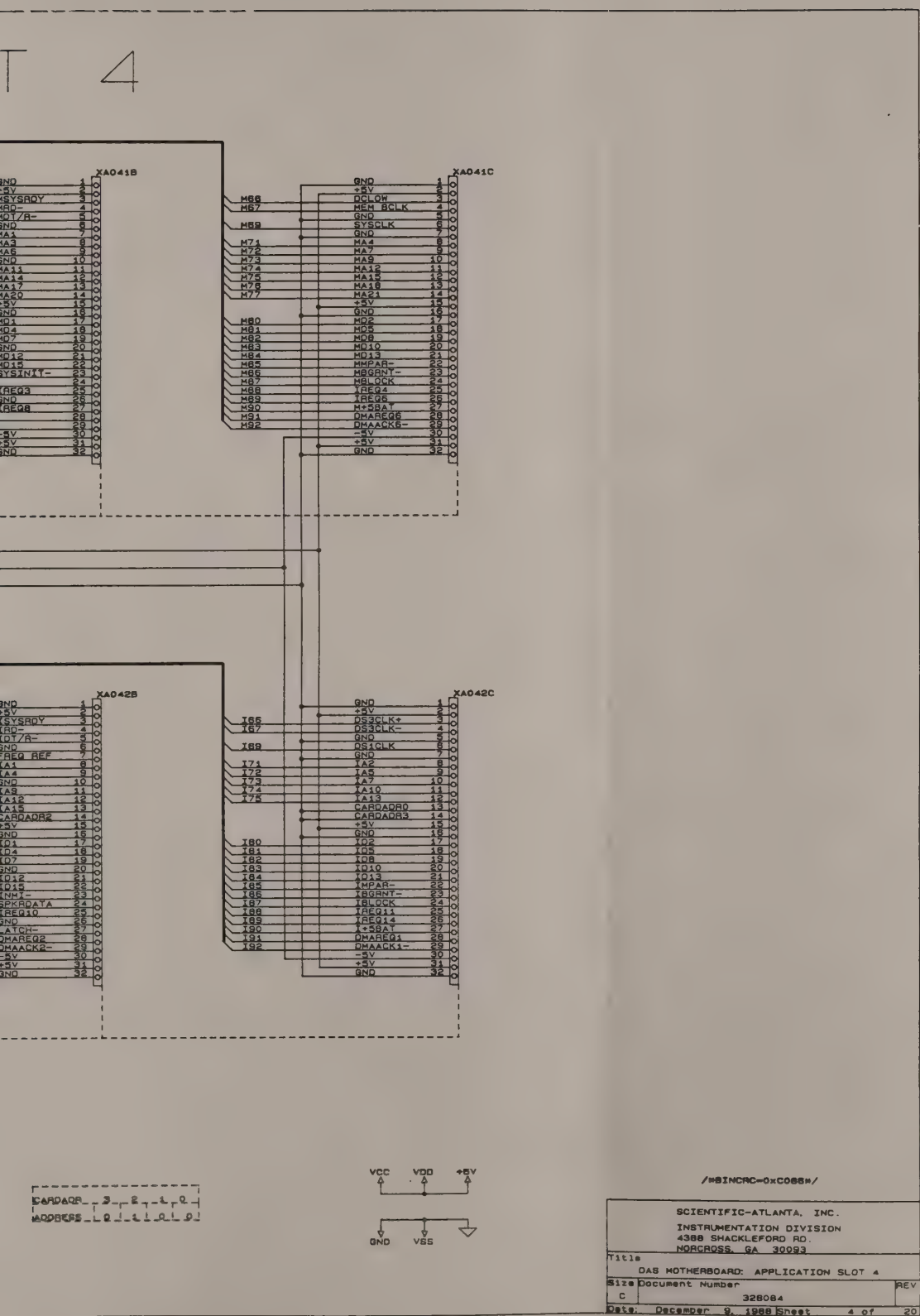
T 4
XA041B
XA041C
XA042B
XA042C
CARDADR 3 2 1 0
ADDRESS 0 1 0 0
VCC VDD +5V
GND VSS
/*BINCRC-0xC088*/
SCIENTIFIC-ATLANTA, INC.
INSTRUMENTATION DIVISION
4388 SHACKLEFORD RD.
NORCROSS, GA 30093
Title
DAS MOTHERBOARD: APPLICATION SLOT 4
Size C
Document Number 328084
REV
Date: December 9, 1988
Sheet 4 of 20

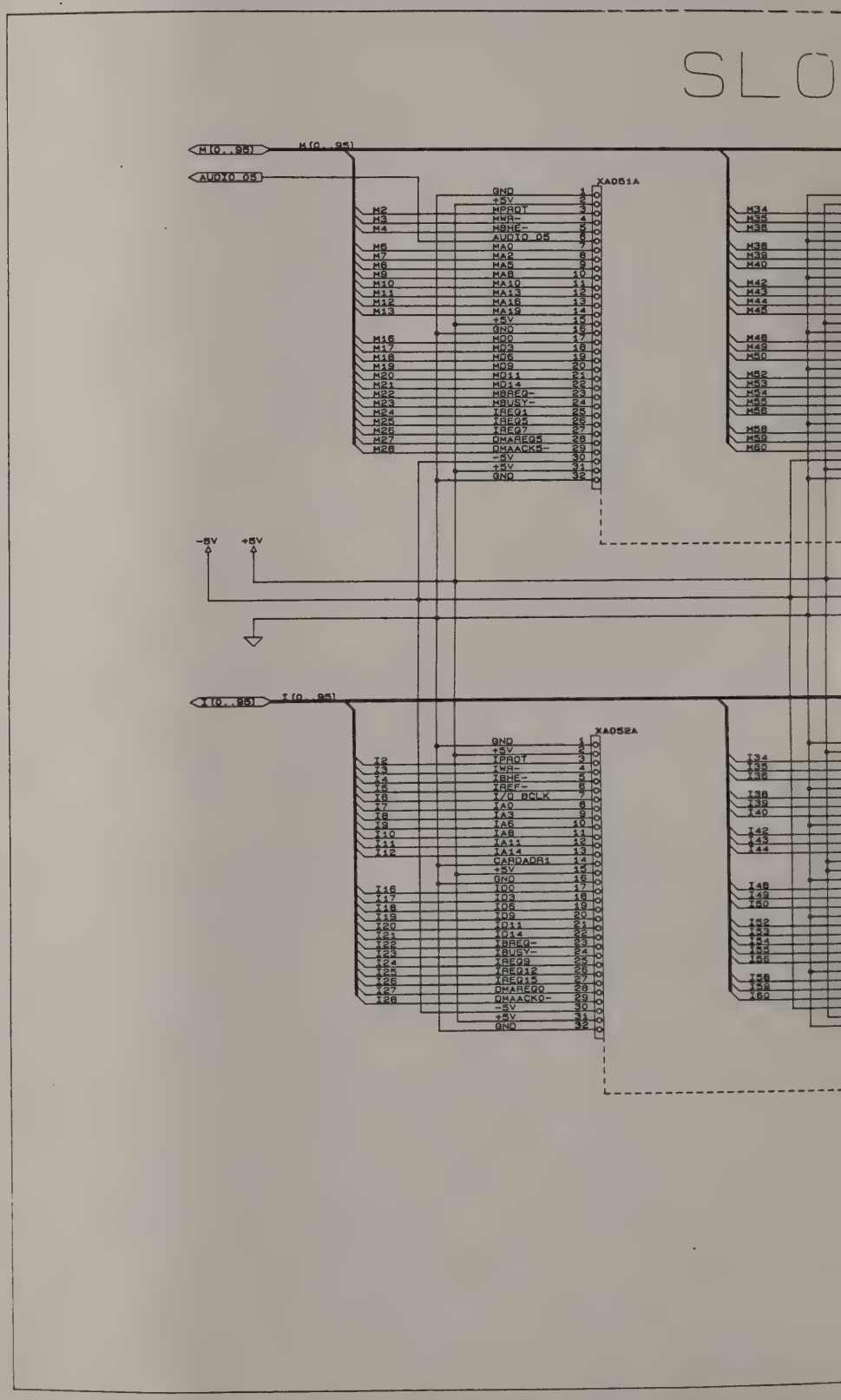
SLO
M(0..95)
AUDIO_05
XA051A
GND
+5V
MPROT
MWR-
MBHE-
AUDIO_05
MA0
MA2
MA5
MA8
MA10
MA13
MA16
MA19
+5V
GND
MD0
MD3
MD6
MD9
MD11
MD14
MBREQ-
MBUSY-
IREQ1
IREQ5
IREQ7
DMAREQ5
DMAACK5-
-5V
+5V
GND
-5V
+5V
I(0..95)
XA052A
GND
+5V
IPROT
IWR-
IBHE-
IREF-
I/O BCLK
IA0
IA3
IA6
IA8
IA11
IA14
CARDADR1
+5V
GND
ID0
ID3
ID6
ID9
ID11
ID14
IBREQ-
IBUSY-
IREQ9
IREQ12
IREQ15
DMAREQ0
DMAACK0-
-5V
+5V
GND

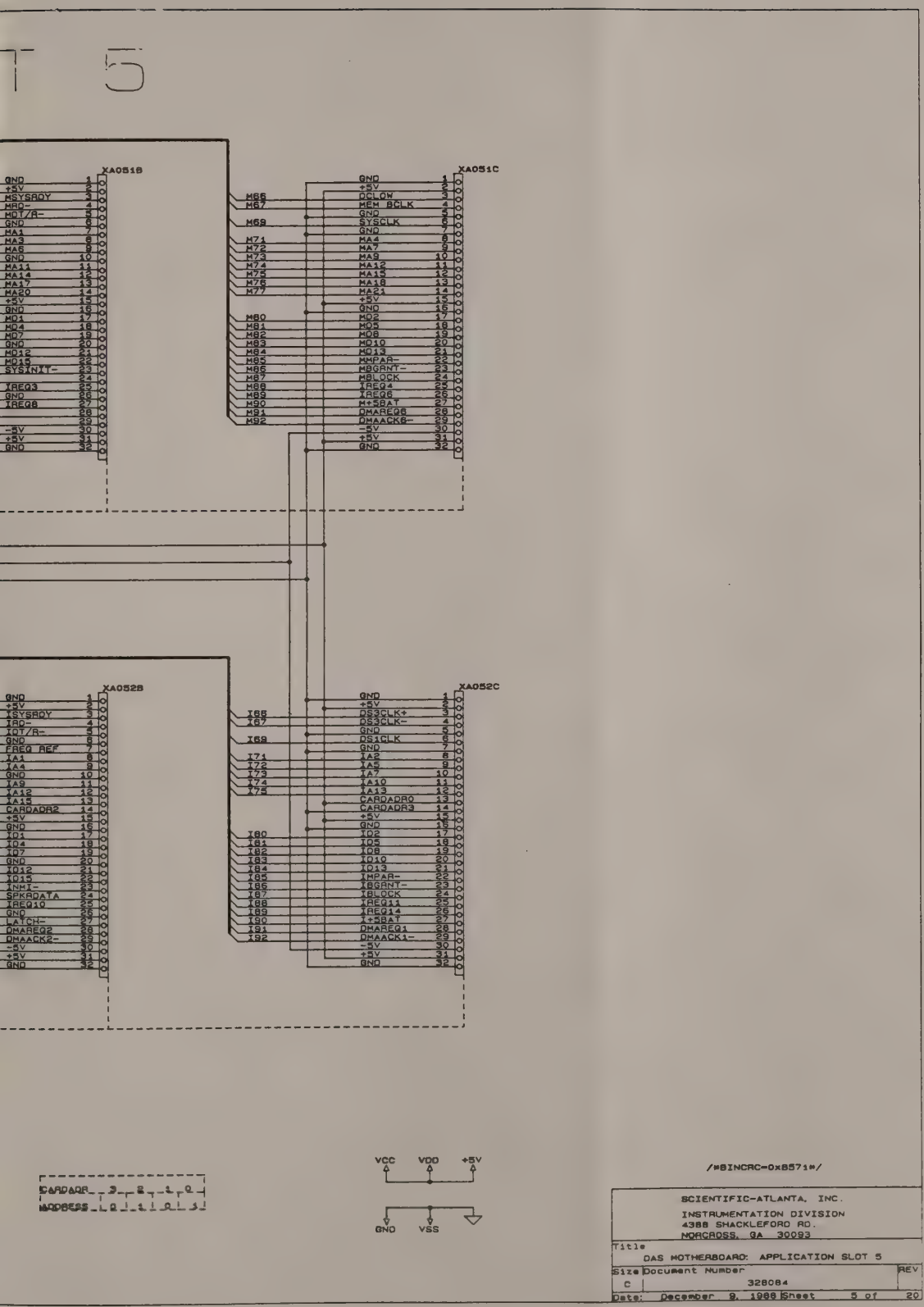
XA051B
XA051C
XA052B
XA052C
SCIENTIFIC-ATLANTA, INC.
INSTRUMENTATION DIVISION
4386 SHACKLEFORD RD.
NORCROSS, GA 30093
Title
DAS MOTHERBOARD: APPLICATION SLOT 5
Size C
Document Number 328084
REV
Date: December 9, 1988 Sheet 5 of 20

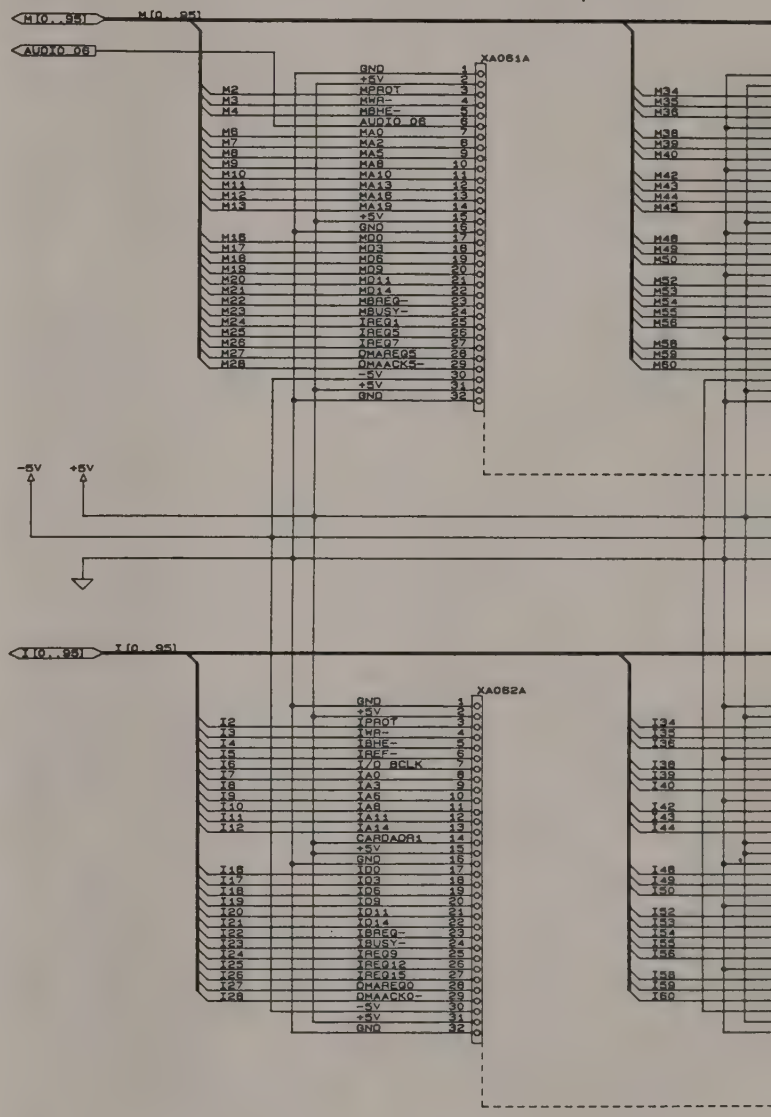
SLO
M[0..95]
AUDIO_DB
XA081A
GND
+5V
MPROT
MWR-
MBHE-
AUDIO_DB
MA0
MA2
MA3
MA8
MA10
MA13
MA16
MA19
+5V
GND
MD0
MD3
MD6
MD9
MD11
MD14
MBREQ-
MBUSY-
IREQ1
IREQ5
IREQ7
DMAREQ5
DMAACK5-
-5V
+5V
GND
-5V
+5V
I[0..95]
XA082A
GND
+5V
IPROT
IWR-
IBHE-
IREF-
I/O BCLK
IA0
IA3
IA8
IA11
IA14
CARDADR1
+5V
GND
ID0
ID3
ID6
ID9
ID11
ID14
IBREQ-
IBUSY-
IREQ9
IREQ12
IREQ15
DMAREQ0
DMAACK0-
-5V
+5V
GND

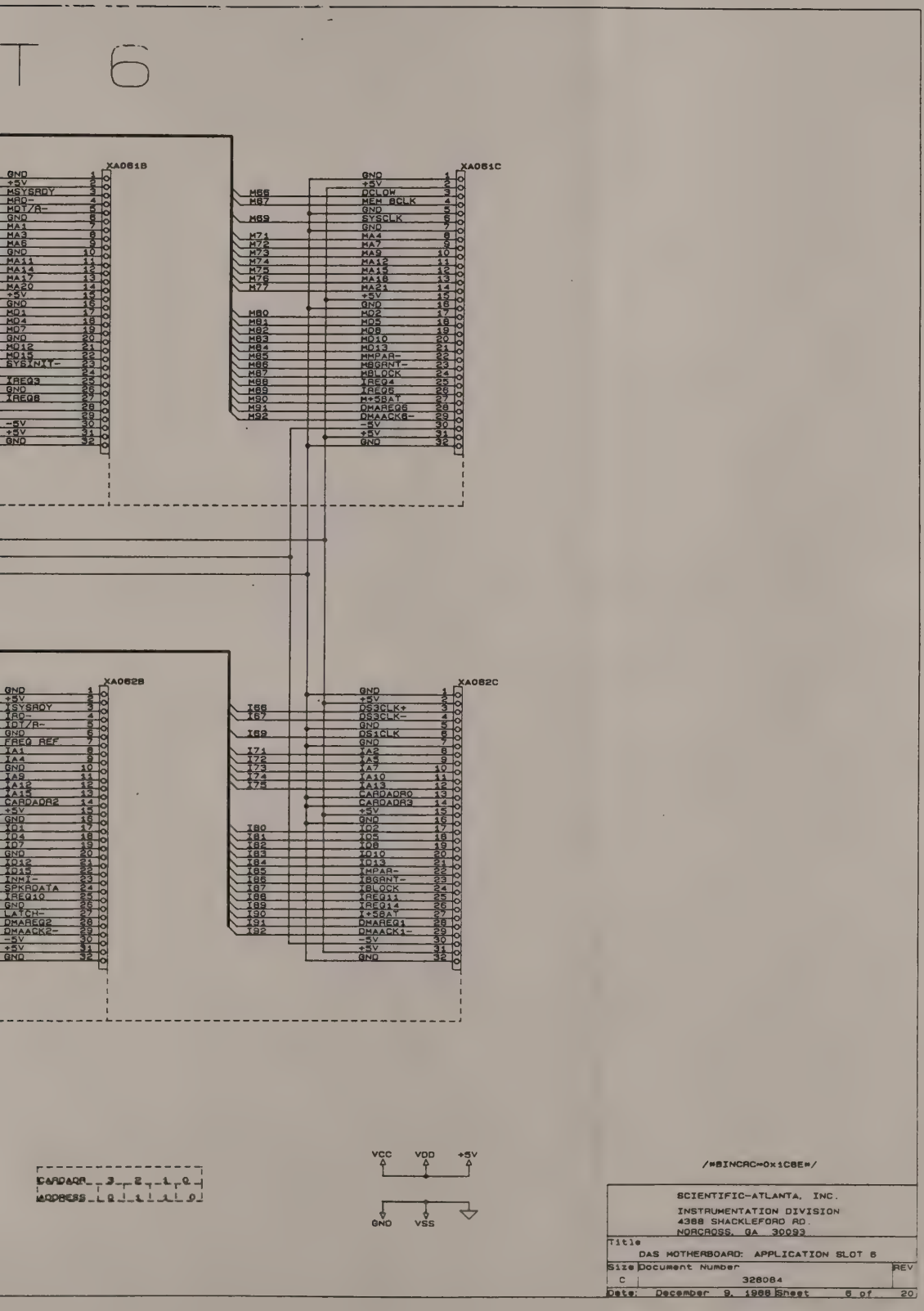
T 6
XA061B
XA061C
XA062B
XA062C
/*BINCAC=0x1C8E*/
SCIENTIFIC-ATLANTA, INC.
INSTRUMENTATION DIVISION
4388 SHACKLEFORD RD.
NORCROSS, GA 30093
Title
DAS MOTHERBOARD: APPLICATION SLOT 6
Size Document Number REV
C 328084
Date: December 9, 1988 Sheet 6 of 20

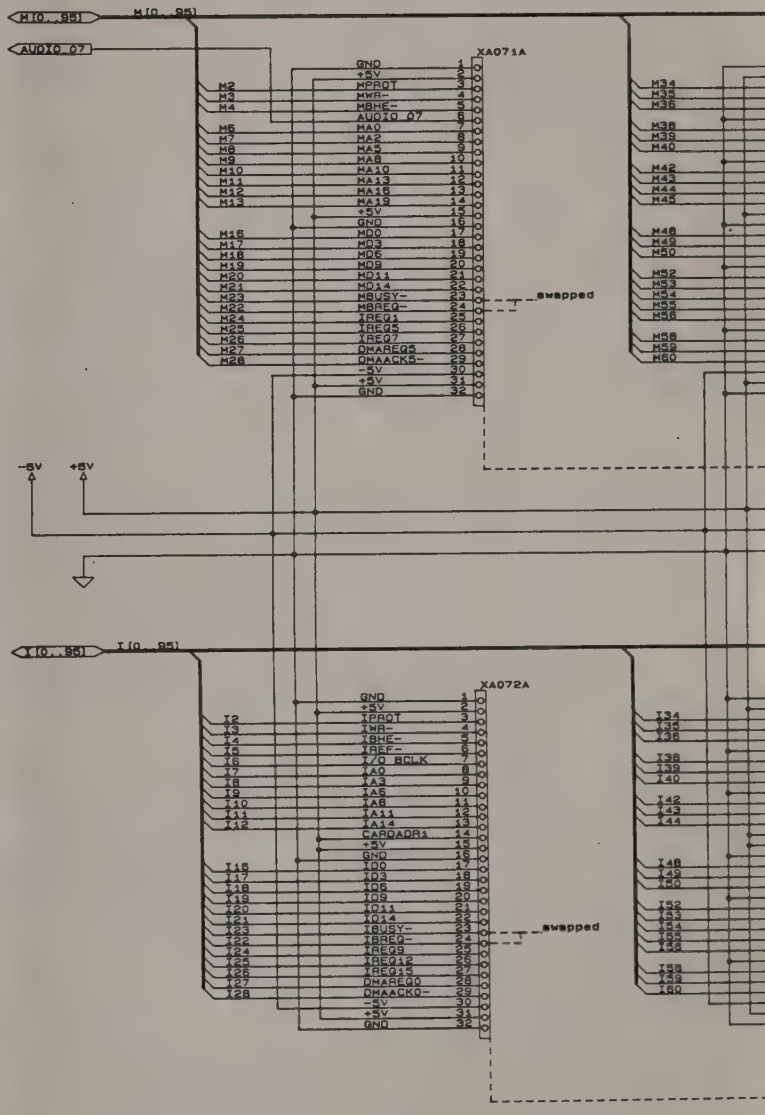
M[0..95]
AUDIO_07
XA071A
GND
+5V
MPROT
MWR-
MRE-
AUDIO_07
MA0
MA2
MA5
MA8
MA10
MA13
MA16
MA19
+5V
GND
MD0
MD3
MD6
MD9
MD11
MD14
MBUSY-
MBREQ-
IREQ11
IREQ5
IREQ7
DMAREQ5
DMAACK5-
-5V
+5V
GND
swapped
-5V
+5V
I[0..95]
XA072A
GND
+5V
IPROT
IWR-
IRE-
IREF-
I/O BCLK
IA0
IA3
IA6
IA8
IA11
IA14
CARDADR1
+5V
GND
ID0
ID3
ID6
ID9
ID11
ID14
IBUSY-
IBREQ-
IREQ9
IREQ12
IREQ15
DMAREQ0
DMAACK0-
-5V
+5V
GND
swapped

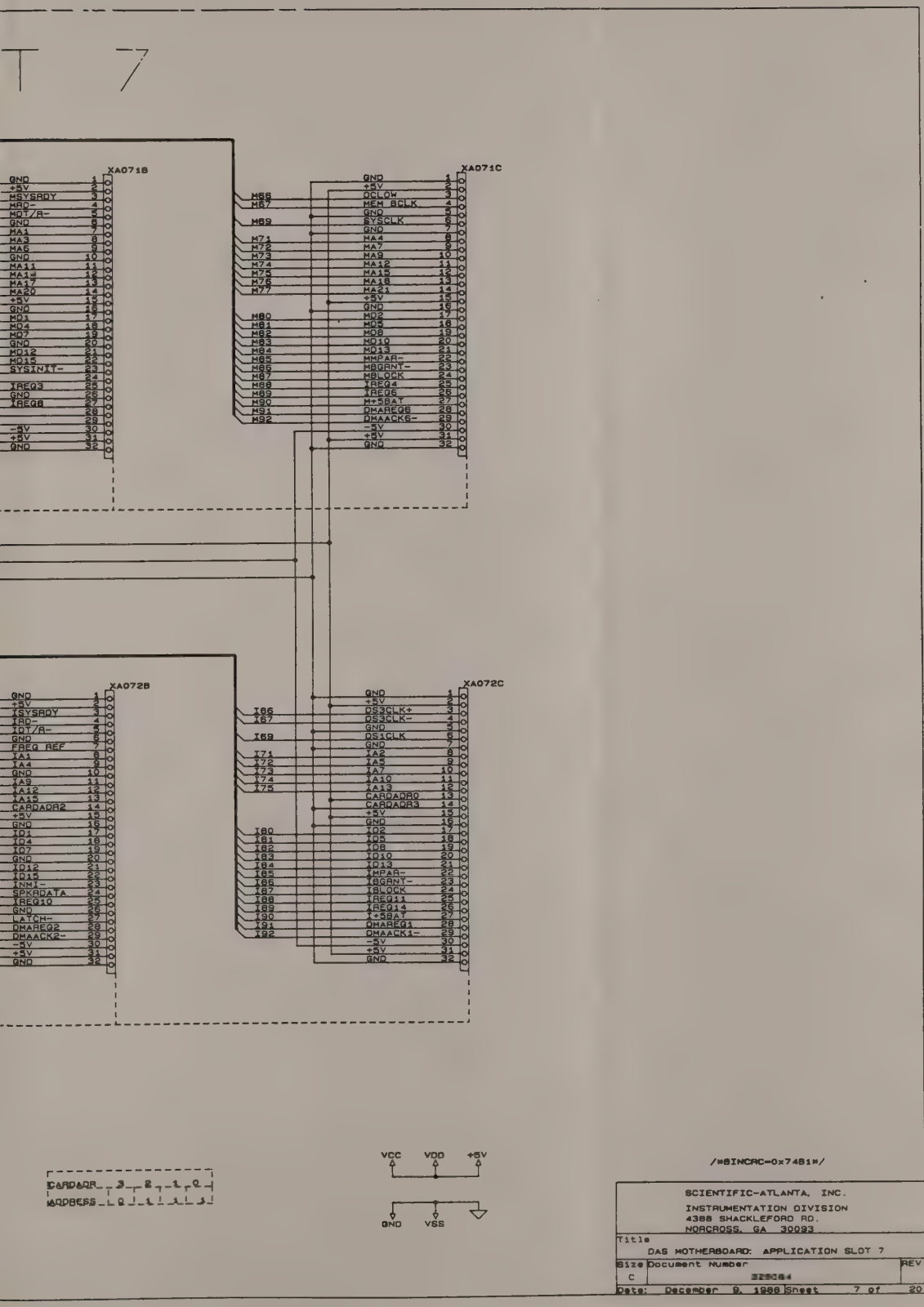

/*BINCRC=0x7481*/

SCIENTIFIC-ATLANTA, INC.
INSTRUMENTATION DIVISION
4388 SHACKLEFORD RD.
NORCROSS, GA 30093

Title
DAS MOTHERBOARD: APPLICATION SLOT 7

Size	Document Number	REV
C	325084	

Date: December 9, 1988 Sheet 7 of 20

SLO

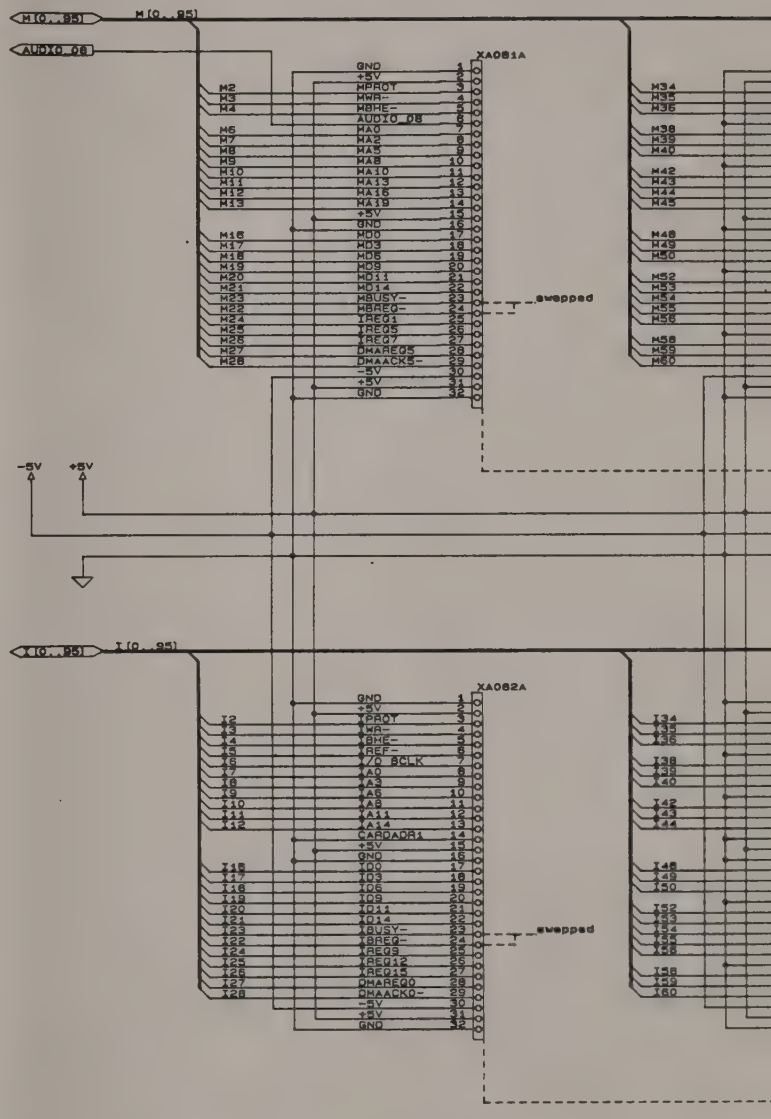
M[0..95]
AUDIO_DB
XA081A
GND
+5V
MPROT
MWR-
MBHE-
AUDIO_DB
MA0
MA2
MA5
MA8
MA10
MA13
MA16
MA19
+5V
GND
MD0
MD3
MD6
MD9
MD11
MD14
MBUSY-
MBREQ-
IREQ1
IREQ5
IREQ7
DMAREQ5
DMAACK5-
-5V
+5V
GND
swapped
-5V
+5V
I[0..95]
XA082A
GND
+5V
IPROT
IWR-
IBHE-
IREF-
I/O_BCLK
IA0
IA3
IA6
IA9
IA11
IA14
CARDADR1
+5V
GND
ID0
ID3
ID6
ID9
ID11
ID14
IBUSY-
IBREQ-
IREQ9
IREQ12
IREQ15
DMAREQ0
DMAACK0-
-5V
+5V
GND
swapped

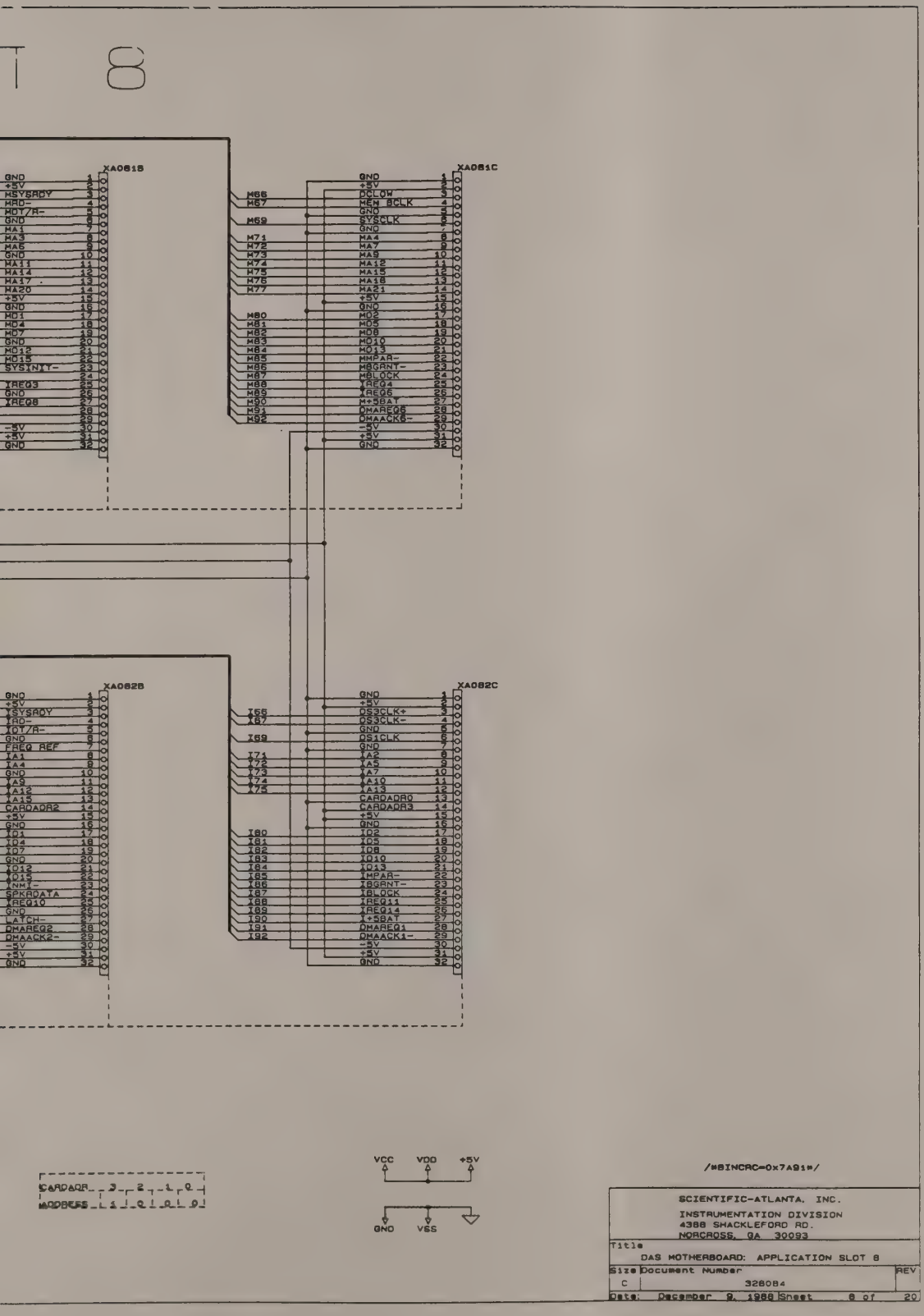
T 8
XA081B
XA081C
XA082B
XA082C
/*BINCRC=0x7A91*/
SCIENTIFIC-ATLANTA, INC.
INSTRUMENTATION DIVISION
4388 SHACKLEFORD RD.
NORCROSS, GA 30093
Title
DAS MOTHERBOARD: APPLICATION SLOT 8
Size
C
Document Number
328084
REV
Date: December 9, 1988 Sheet 8 of 20
VCC
VDD
+5V
GND
VSS

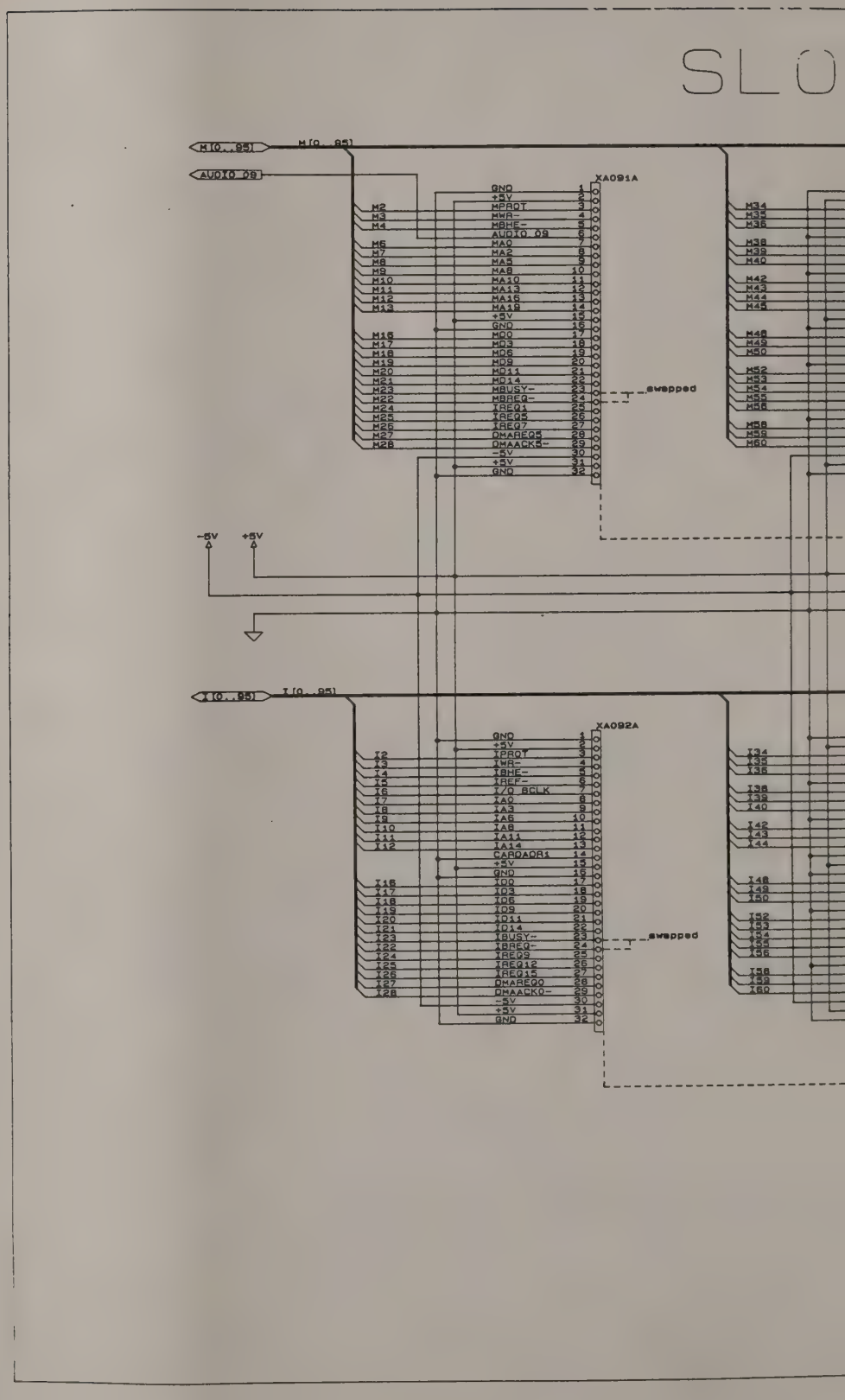
SLO
M[0..95]
AUDIO_09
XA091A
GND
+5V
MPROT
MWR-
MBHE-
AUDIO_09
MA0
MA2
MA5
MA8
MA10
MA13
MA16
MA18
+5V
GND
MD0
MD3
MD6
MD9
MD11
MD14
MBUSY-
MBREQ-
IREQ1
IREQ5
IREQ7
DMAREQ5
DMAACK5-
-5V
+5V
GND
swapped
-5V
+5V
I[0..95]
XA092A
GND
+5V
IPROT
IWR-
IBHE-
IREF-
I/O_BCLK
IA0
IA3
IA6
IA8
IA11
IA14
CARDADR1
+5V
GND
ID0
ID3
ID6
ID9
ID11
ID14
IBUSY-
IBREQ-
IREQ9
IREQ12
IREQ15
DMAREQ0
DMAACK0-
-5V
+5V
GND
swapped

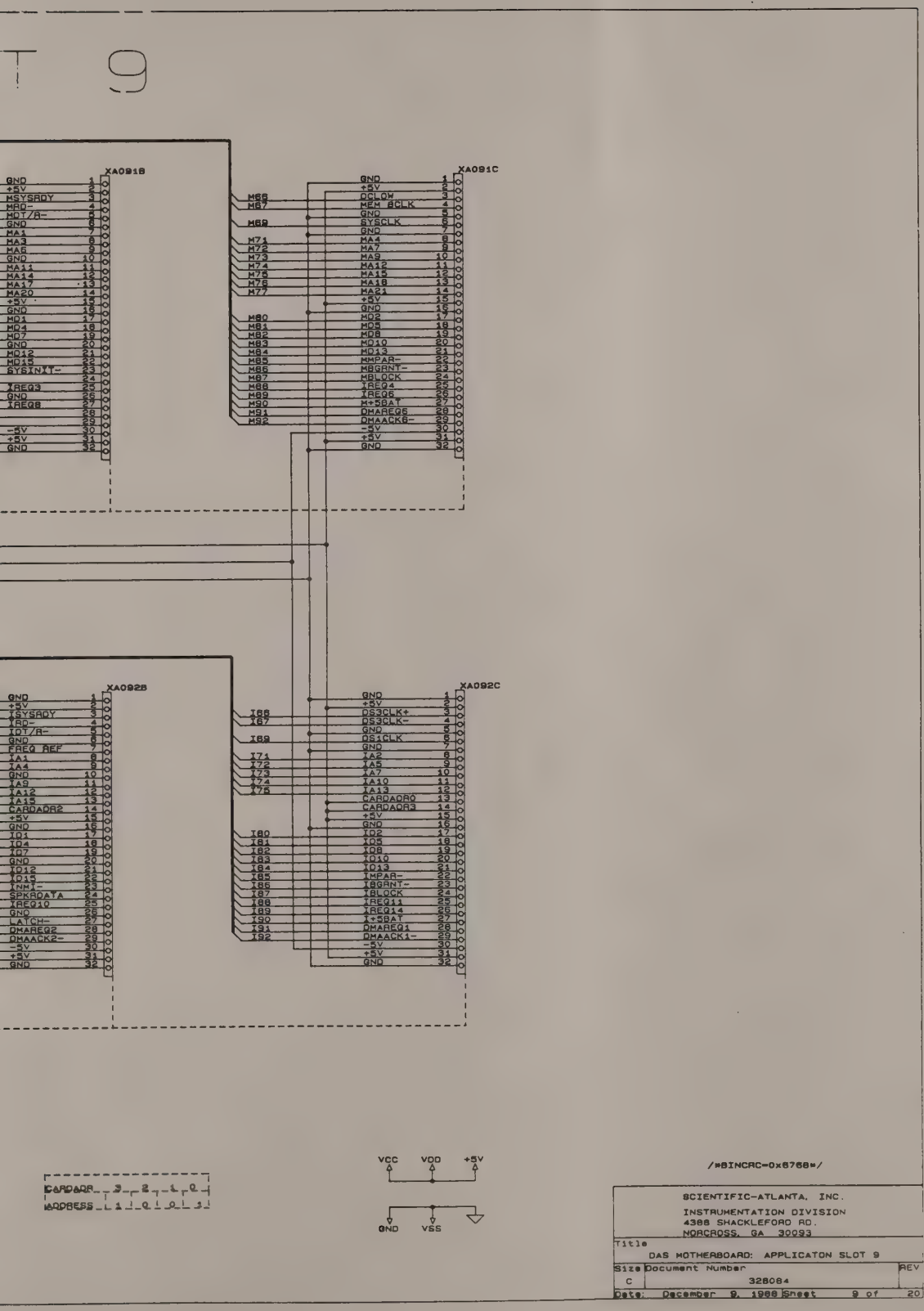
T 9
XA091B
XA091C
XA092B
XA092C
GND
+5V
MSYSRDY
MRD-
MOT/R-
MA1
MA3
MA6
MA11
MA14
MA17
MA20
MD1
MD4
MD7
MD12
MD15
SYSINIT-
IREQ3
IREQ8
-5V
M68
M67
M69
M71
M72
M73
M74
M75
M76
M77
M80
M81
M82
M83
M84
M85
M86
M87
M88
M89
M90
M91
M92
SYSCLK
MA4
MA7
MA9
MA12
MA15
MA18
MA21
MD2
MD5
MD8
MD10
MD13
MMPAR-
MBGRNT-
MBLOCK
IREQ4
IREQ6
M+5BAT
DMAREQ6
DMAACK6-
I68
I67
I69
I71
I72
I73
I74
I75
I80
I81
I82
I83
I84
I85
I86
I87
I88
I89
I90
I91
I92
FREQ REF
IA1
IA4
IA9
IA12
IA15
CARDADR2
IO1
IO4
IO7
IO10
IO13
IO15
INMI-
SPKRDATA
IREQ10
LATCH-
DMAREQ2
DMAACK2-
DS3CLK+
DS3CLK-
DS1CLK
IA2
IA5
IA7
IA10
IA13
CARDADR0
CARDADR3
IO2
IO5
IO8
IO10
IO13
IMPAR-
IBGRNT-
IBLOCK
IREQ11
IREQ14
I+5BAT
DMAREQ1
DMAACK1-
CARDADR
ADDRESS
VCC
VDD
+5V
GND
VSS
/*$INCRC=0x6768*/
SCIENTIFIC-ATLANTA, INC.
INSTRUMENTATION DIVISION
4388 SHACKLEFORD RD.
NORCROSS, GA 30093
Title
DAS MOTHERBOARD: APPLICATON SLOT 9
Size
C
Document Number
328084
REV
Date: December 9, 1988 Sheet 9 of 20

SLO

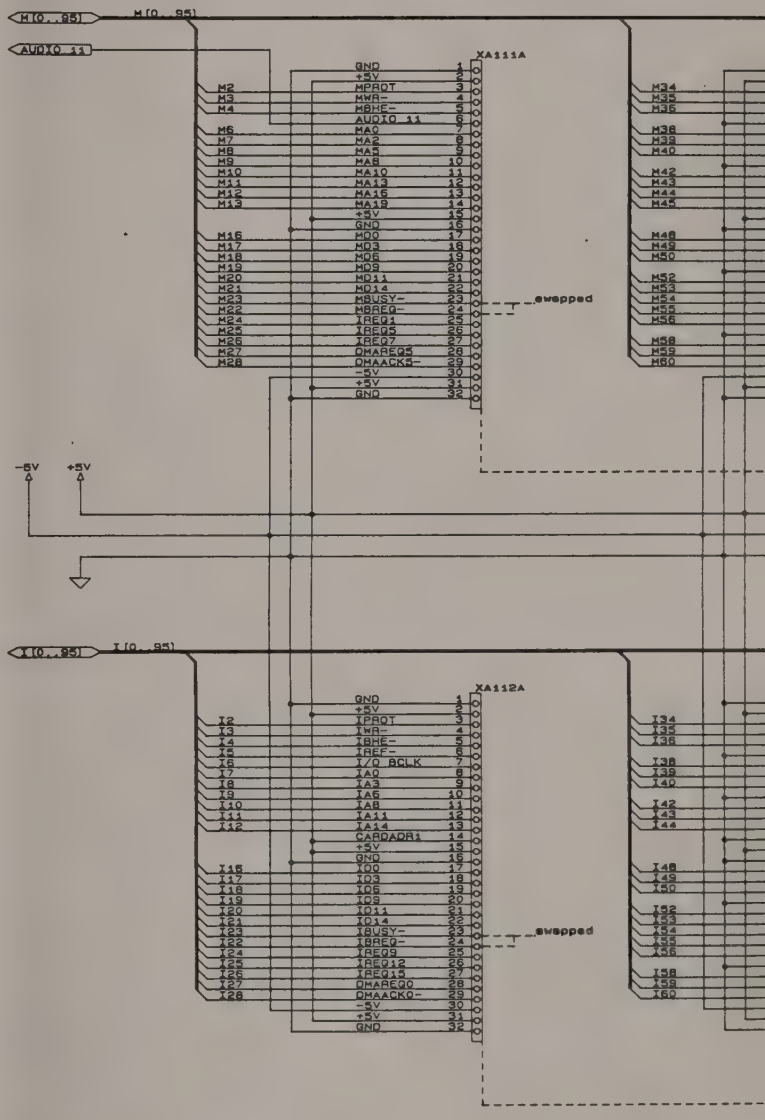
M[0..95]
AUDIO_11
XA111A
GND
+5V
MPROT
MWR-
MBHE-
AUDIO_11
MA0
MA2
MA5
MA8
MA10
MA13
MA16
MA19
+5V
GND
MD0
MD3
MD6
MD9
MD11
MD14
MBUSY-
MBREQ-
IREQ1
IREQ5
IREQ7
DMAREQ5
DMAACK5-
-5V
+5V
GND
swapped
-5V
+5V
I[0..95]
XA112A
GND
+5V
IPROT
IWR-
IBHE-
IREF-
I/O BCLK
IA0
IA3
IA6
IA8
IA11
IA14
CARDADR1
+5V
GND
ID0
ID3
ID6
ID9
ID11
ID14
IBUSY-
IBREQ-
IREQ9
IREQ12
IREQ15
DMAREQ0
DMAACK0-
-5V
+5V
GND
swapped

T 11

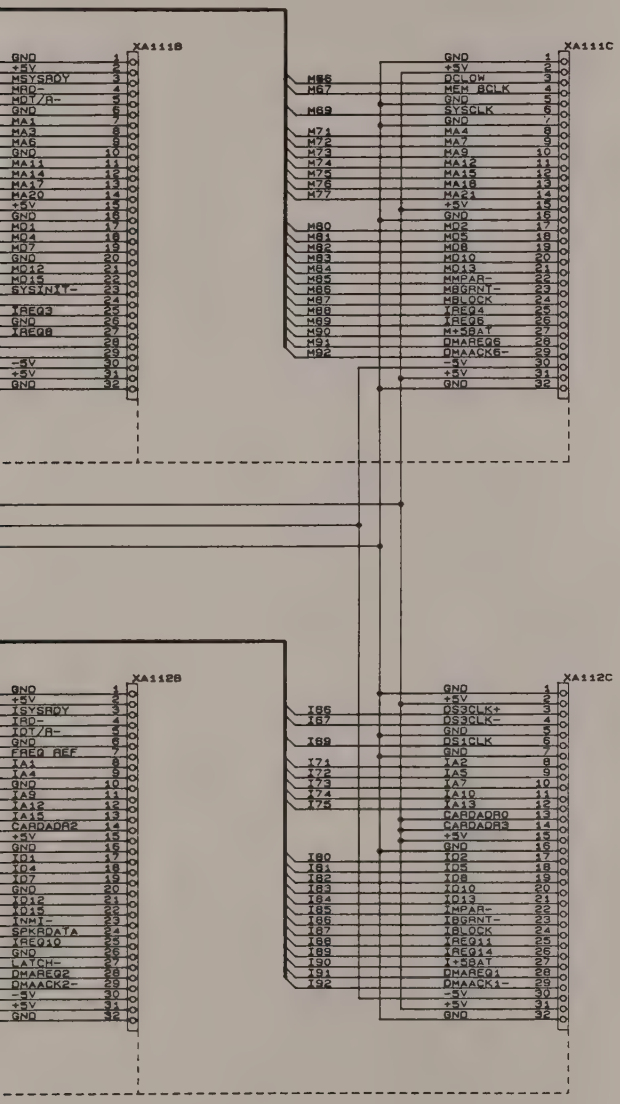

/*$INCRC=0x6388*/

SCIENTIFIC-ATLANTA, INC.
INSTRUMENTATION DIVISION
4386 SHACKLEFORD RD.
NORCROSS, GA 30093

Title
DAS MOTHERBOARD: APPLICATION SLOT 11

Size C | Document Number 328084 | REV

Date: December 9, 1986 Sheet 11 of 20

SLO

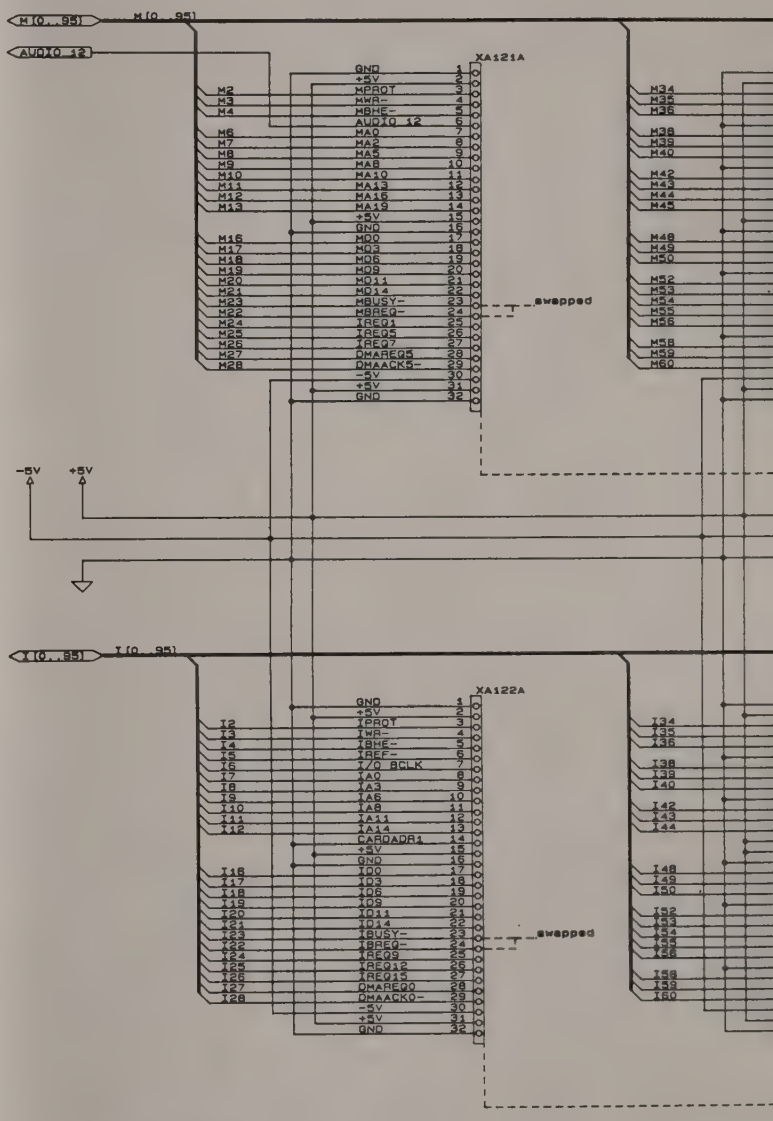
M[0..95]
AUDIO 12
XA121A
GND
+5V
MPROT
MWR-
MBHE-
AUDIO 12
MA0
MA2
MA5
MA8
MA10
MA13
MA16
MA19
+5V
GND
MD0
MD3
MD6
MD9
MD11
MD14
MBUSY-
MBREQ-
IREQ1
IREQ5
IREQ7
DMAREQ5
DMAACK5-
-5V
+5V
GND
swapped
-5V
+5V
I[0..95]
XA122A
GND
+5V
IPROT
IWR-
IBHE-
IREF-
I/O BCLK
IA0
IA3
IA6
IA8
IA11
IA14
CARDADR1
+5V
GND
ID0
ID3
ID6
ID9
ID11
ID14
IBUSY-
IBREQ-
IREQ9
IREQ12
IREQ15
DMAREQ0
DMAACK0-
-5V
+5V
GND
swapped

T 12

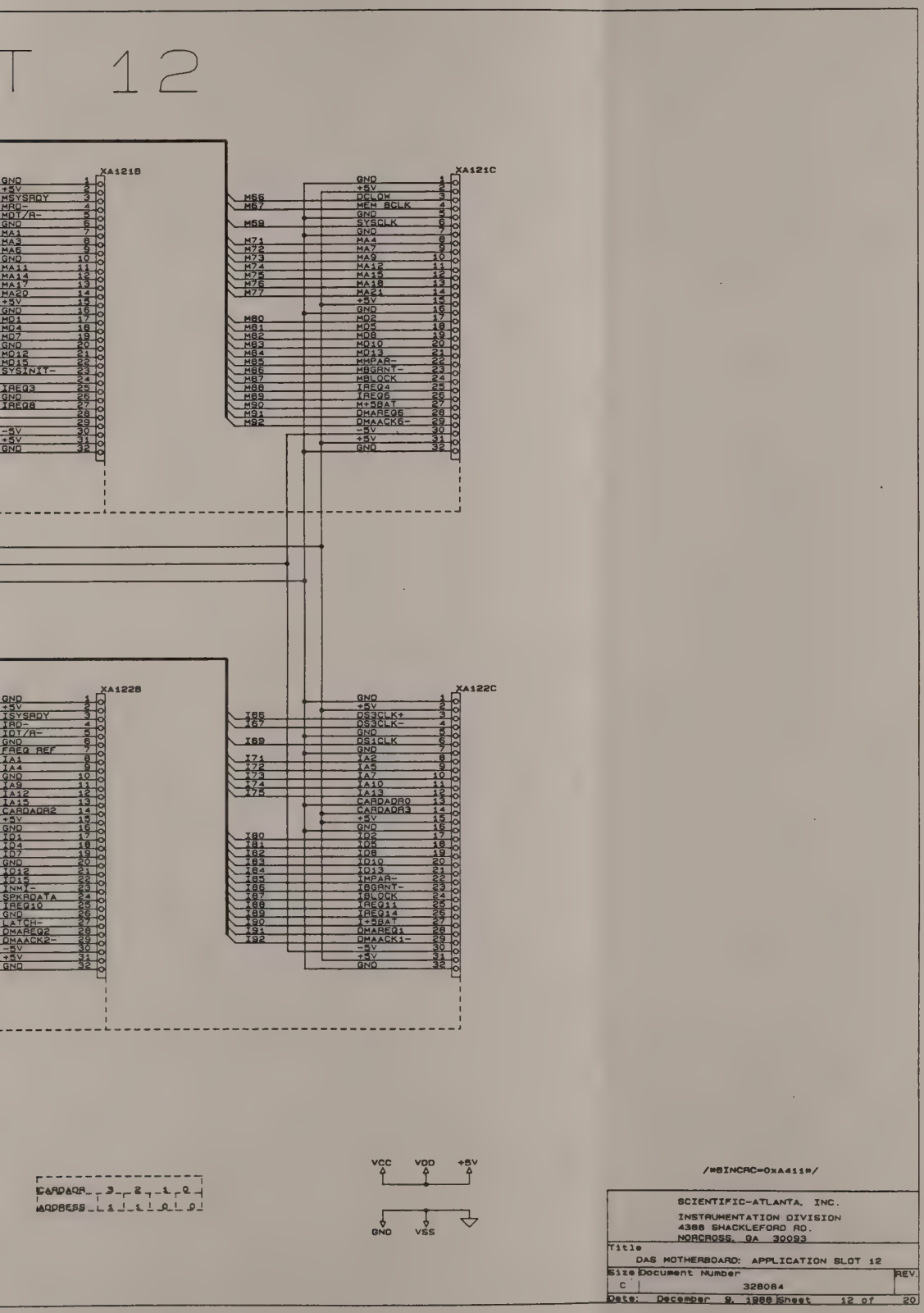
XA121B
XA121C
XA122B
XA122C
/MBINCAC=0xA411H/
SCIENTIFIC-ATLANTA, INC.
INSTRUMENTATION DIVISION
4386 SHACKLEFORD RD.
NORCROSS, GA 30093
Title
DAS MOTHERBOARD: APPLICATION SLOT 12
Size Document Number REV.
C 328084
Date: December 9, 1988 Sheet 12 of 20

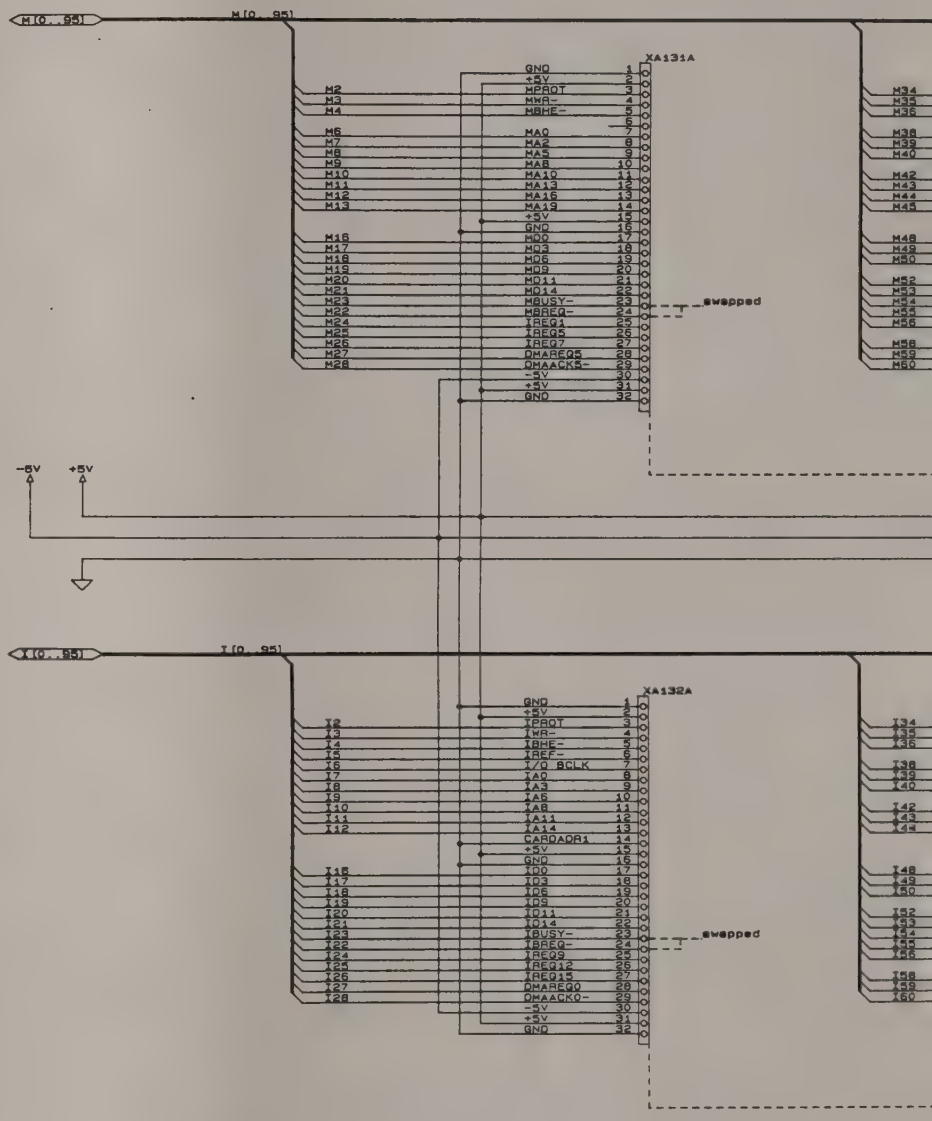
SL
M[0..95]
XA131A
GND 1
+5V 2
MPROT 3
MWR- 4
MBHE- 5
6
MA0 7
MA2 8
MA5 9
MA8 10
MA10 11
MA13 12
MA16 13
MA19 14
+5V 15
GND 16
MD0 17
MD3 18
MD6 19
MD9 20
MD11 21
MD14 22
MBUSY- 23
MBREQ- 24
IREQ1 25
IREQ5 26
IREQ7 27
DMAREQ5 28
DMAACK5- 29
-5V 30
+5V 31
GND 32
swapped
M2 M3 M4 M6 M7 M8 M9 M10 M11 M12 M13 M15 M17 M18 M19 M20 M21 M22 M23 M24 M25 M26 M27 M28
M34 M35 M36 M38 M39 M40 M42 M43 M44 M45 M48 M49 M50 M52 M53 M54 M55 M56 M58 M59 M60
-5V +5V
I[0..95]
XA132A
GND 1
+5V 2
IPROT 3
IWR- 4
IBHE- 5
IREF- 6
I/O BCLK 7
IA0 8
IA3 9
IA6 10
IA8 11
IA11 12
IA14 13
CARDADR1 14
+5V 15
GND 16
ID0 17
ID3 18
ID6 19
ID9 20
ID11 21
ID14 22
IBUSY- 23
IBREQ- 24
IREQ9 25
IREQ12 26
IREQ15 27
DMAREQ0 28
DMAACK0- 29
-5V 30
+5V 31
GND 32
swapped
I2 I3 I4 I5 I6 I7 I8 I9 I10 I11 I12 I15 I17 I18 I19 I20 I21 I23 I22 I24 I25 I26 I27 I28
I34 I35 I36 I38 I39 I40 I42 I43 I44 I48 I49 I50 I52 I53 I54 I55 I56 I58 I59 I60

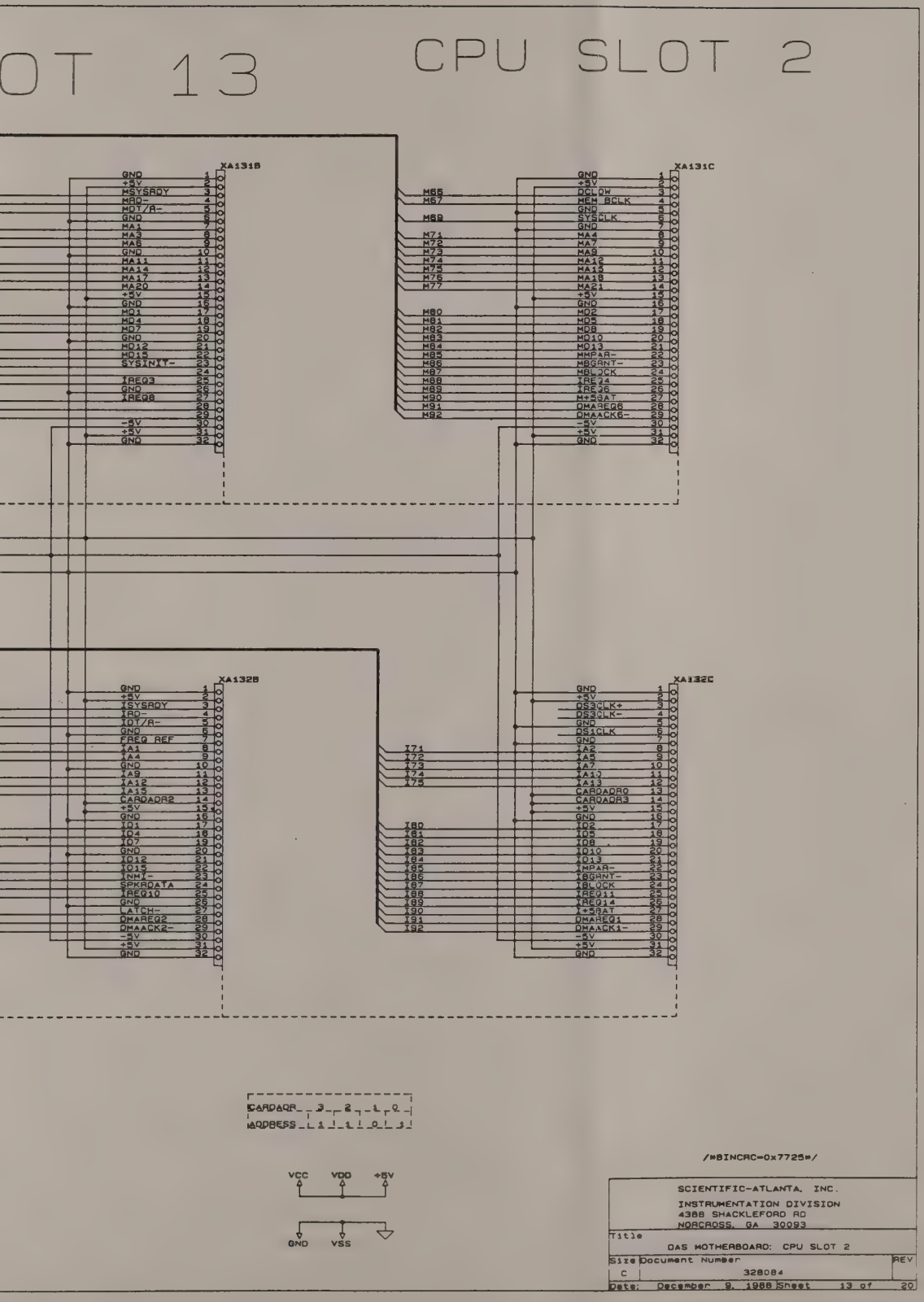
OT 13
CPU SLOT 2
XA131B
XA131C
XA132B
XA132C
CARDADR 3 2 1 0
ADDRESS 1 1 0 1
VCC VDD +5V
GND VSS
/*BINCRC=0x7725*/
SCIENTIFIC-ATLANTA, INC.
INSTRUMENTATION DIVISION
4388 SHACKLEFORD RD
NORCROSS, GA 30093
Title
DAS MOTHERBOARD: CPU SLOT 2
Size C
Document Number 328084
REV
Date: December 9, 1988 Sheet 13 of 20

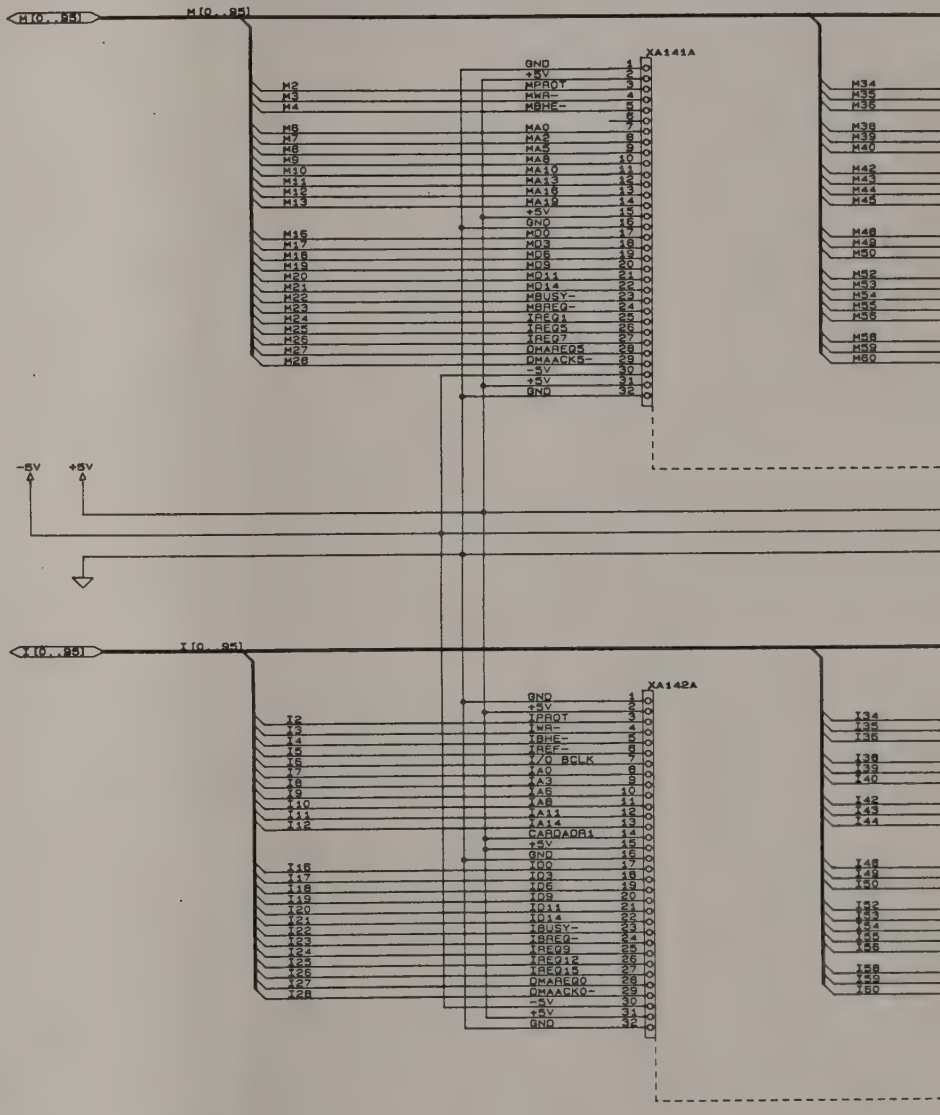
M[0..95]
XA141A
GND
+5V
MPROT
MWR-
MBHE-
MA0
MA2
MA3
MA8
MA10
MA13
MA16
MA19
+5V
GND
MD0
MD3
MD6
MD9
MD11
MD14
MBUSY-
MBREQ-
IREQ1
IREQ5
IREQ7
DMAREQ5
DMAACK5-
-5V
+5V
GND
-5V
+5V
I[0..95]
XA142A
GND
+5V
IPROT
IWR-
IBHE-
IREF-
I/O BCLK
IA0
IA3
IA6
IA8
IA11
IA14
CARDADR1
+5V
GND
ID0
ID3
ID6
ID9
ID11
ID14
IBUSY-
IBREQ-
IREQ9
IREQ12
IREQ15
DMAREQ0
DMAACK0-
-5V
+5V
GND

T 14

CPU BUS 1

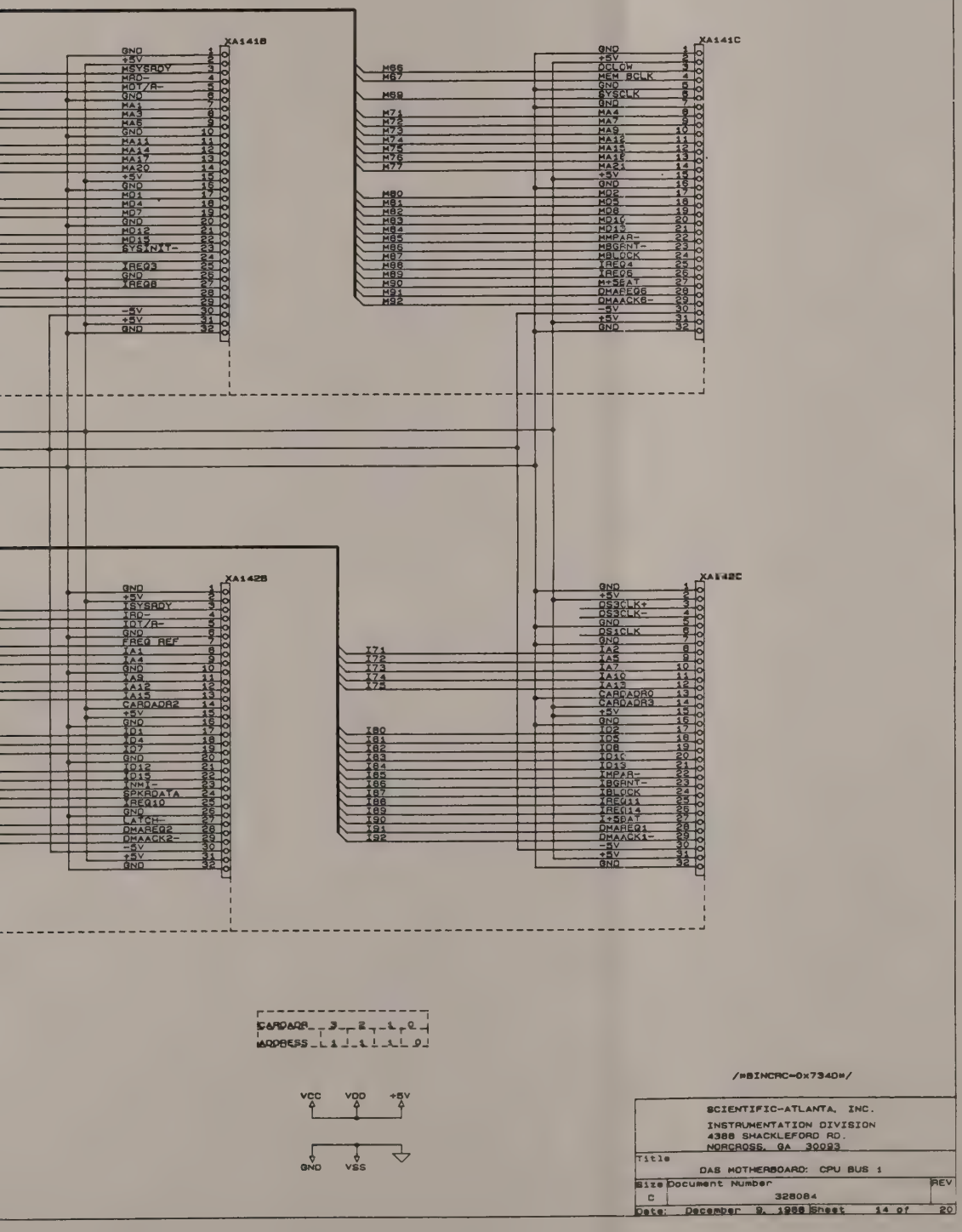
XA1418
XA141C
XA1428
XA142C
M85
M87
M89
M71
M72
M73
M74
M75
M76
M77
M80
M81
M82
M83
M84
M85
M86
M87
M88
M89
M90
M91
M92
I71
I72
I73
I74
I75
I80
I81
I82
I83
I84
I85
I86
I87
I88
I89
I90
I91
I92
CARDADR
ADDRESS
VCC
VDD
+5V
GND
VSS
/*$INCRC=0x7340*/
SCIENTIFIC-ATLANTA, INC.
INSTRUMENTATION DIVISION
4386 SHACKLEFORD RD.
NORCROSS, GA 30093
Title
DAS MOTHERBOARD: CPU BUS 1
Size
C
Document Number
328084
REV
Date: December 9, 1988 Sheet 14 of 20

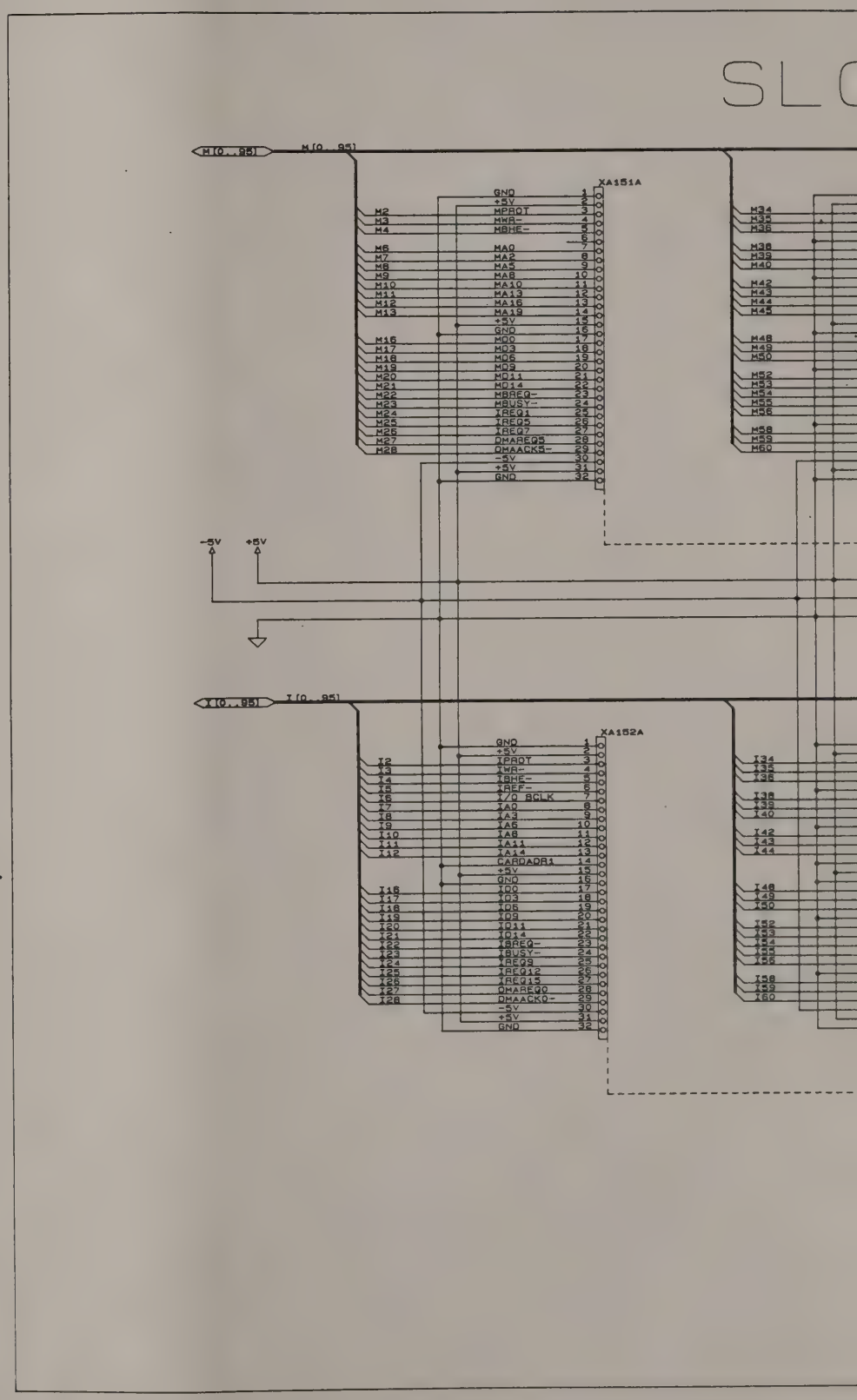
SLO
M[0..95]
XA151A
GND
+5V
MPROT
MWR-
MBHE-
MA0
MA2
MA5
MA8
MA10
MA13
MA16
MA19
+5V
GND
MD0
MD3
MD6
MD9
MD11
MD14
MBREQ-
MBUSY-
IREQ1
IREQ5
IREQ7
DMAREQ5
DMAACK5-
-5V
+5V
GND
-5V
+5V
I[0..95]
XA152A
GND
+5V
IPROT
IWR-
IBHE-
IREF-
I/O BCLK
IA0
IA3
IA6
IA8
IA11
IA14
CARDADR1
+5V
GND
ID0
ID3
ID6
ID9
ID11
ID14
IBREQ-
IBUSY-
IREQ9
IREQ12
IREQ15
DMAREQ0
DMAACK0-
-5V
+5V
GND

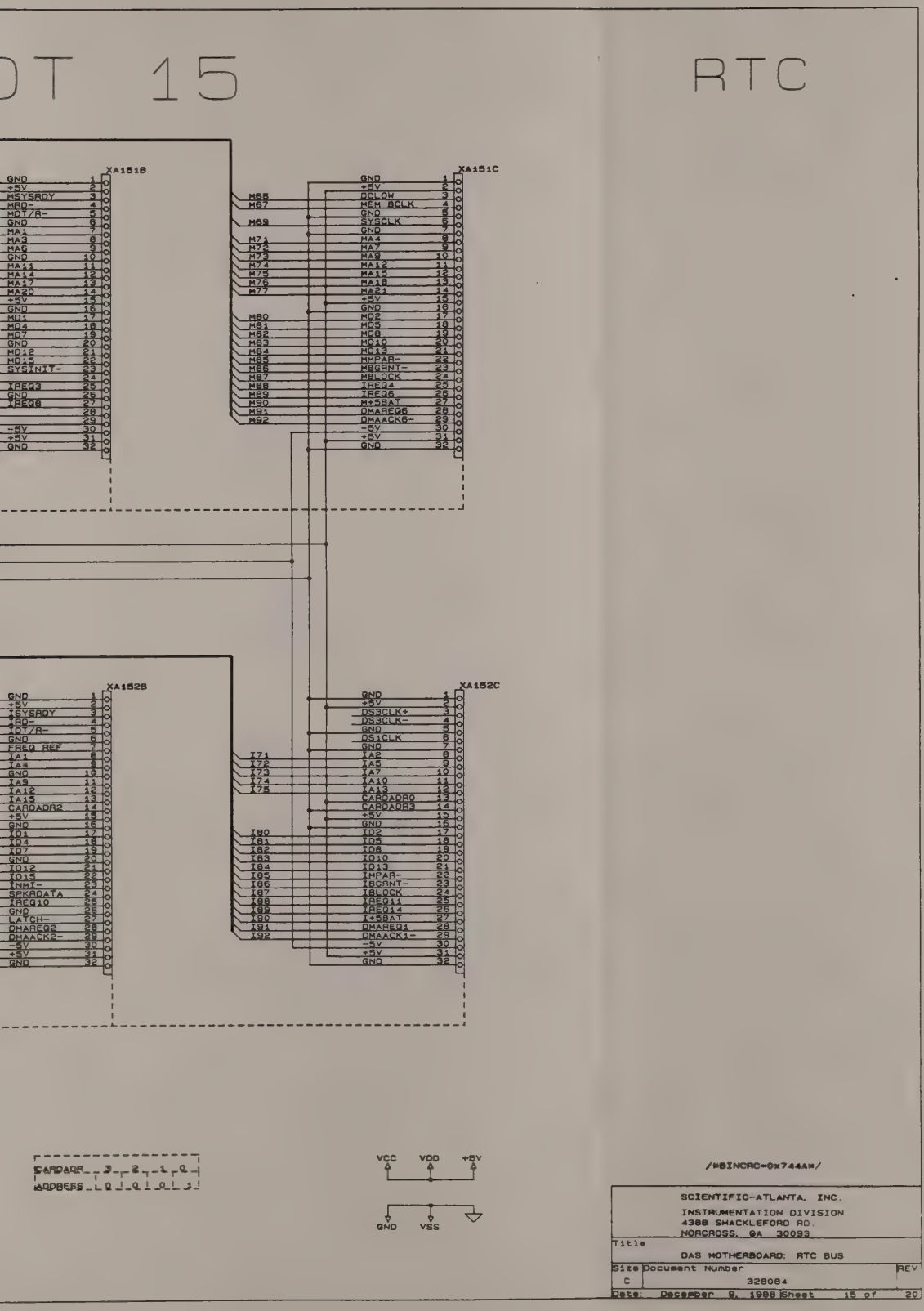
OT 15
RTC
XA151B
XA151C
XA152B
XA152C
/MBINCRC=0x744A#/
SCIENTIFIC-ATLANTA, INC.
INSTRUMENTATION DIVISION
4386 SHACKLEFORD RD.
NORCROSS, GA 30093
Title
DAS MOTHERBOARD: RTC BUS
Size C
Document Number 326084
REV
Date: December 9, 1988 Sheet 15 of 20

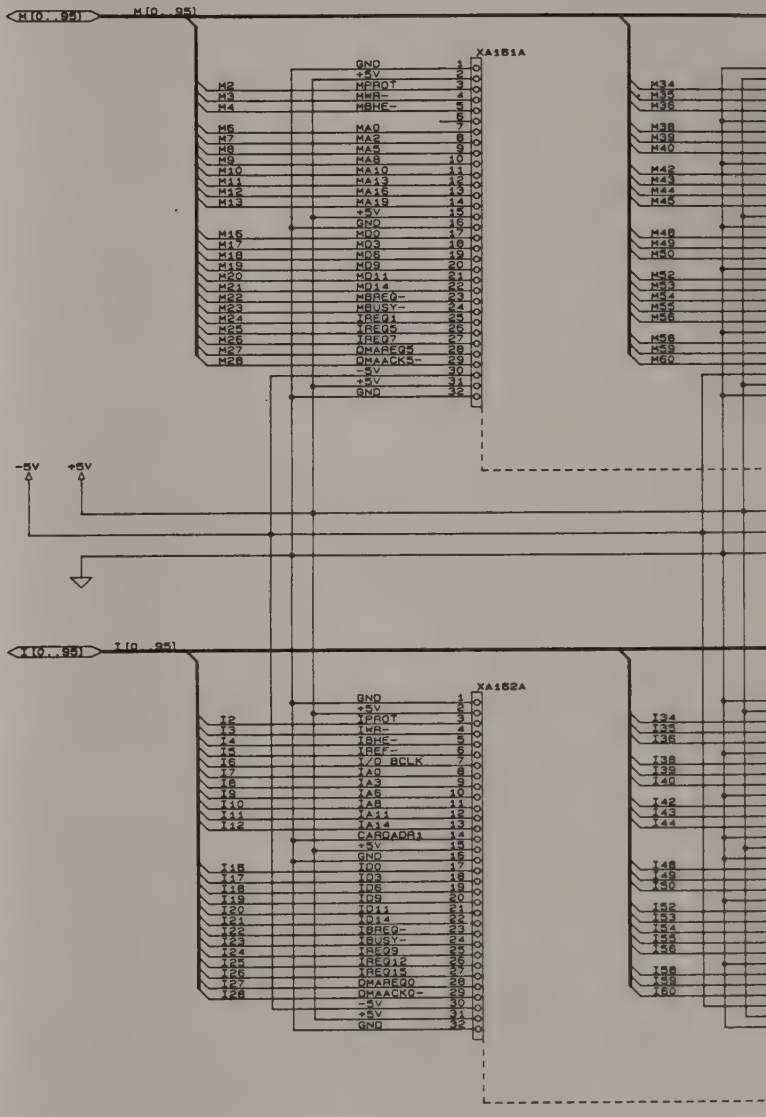
M[0..95]
XA151A
GND
+5V
MPROT
MWR-
MBHE-
MA0
MA2
MA5
MA8
MA10
MA13
MA16
MA19
+5V
GND
MD0
MD3
MD5
MD9
MD11
MD14
MBREQ-
MBUSY-
MREQ1
MREQ5
MREQ7
DMAREQ5
DMAACK5-
-5V
+5V
GND
-5V
+5V
I[0..95]
XA152A
GND
+5V
IPROT
IWR-
IBHE-
IREF-
I/O BCLK
IA0
IA3
IA6
IA8
IA11
IA14
CARDADR1
+5V
GND
ID0
ID3
ID6
ID9
ID11
ID14
IBREQ-
IBUSY-
IREQ9
IREQ12
IREQ15
DMAREQ0
DMAACK0-
-5V
+5V
GND

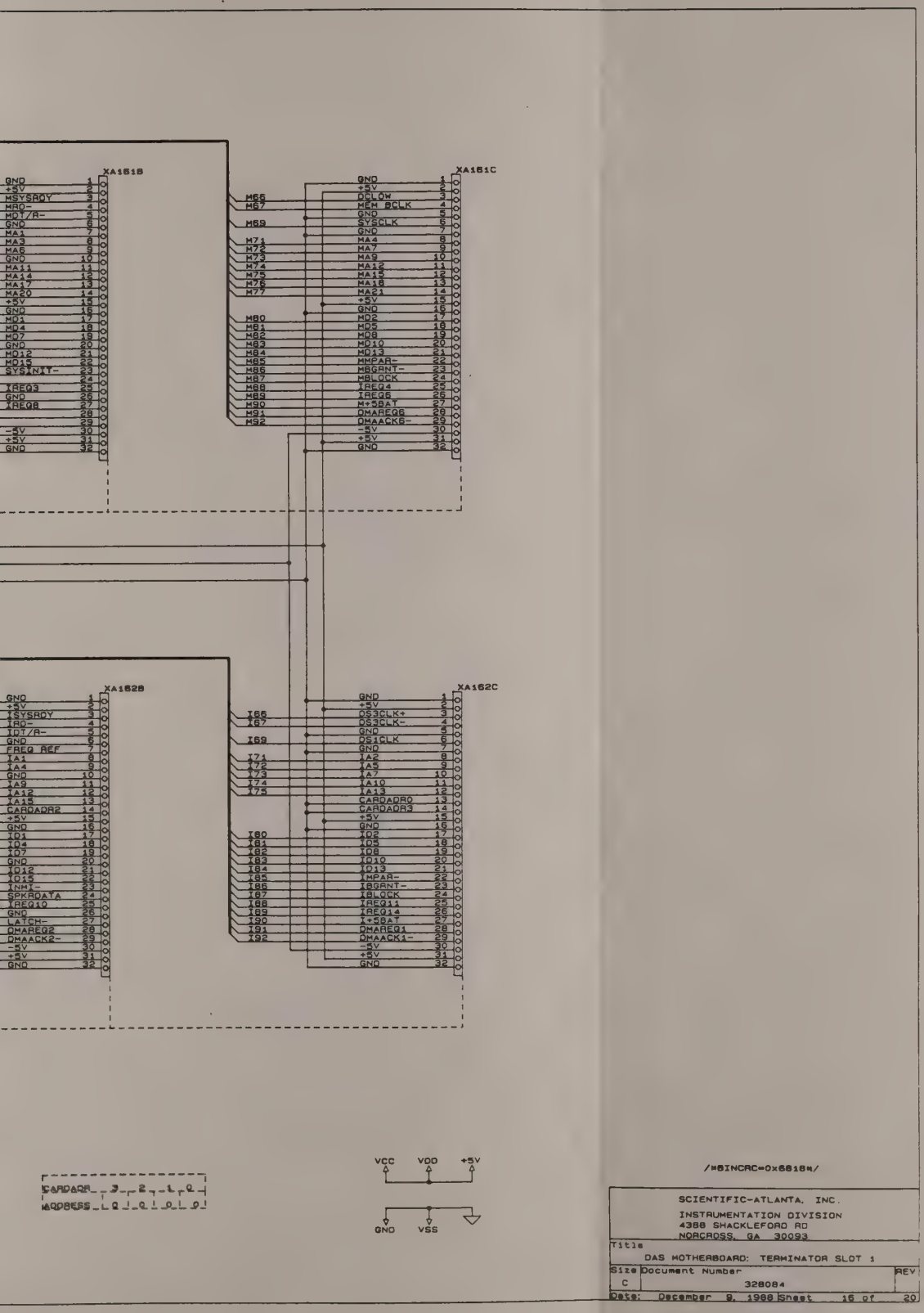
XA161B
XA161C
XA162B
XA162C
/*BINCRC=0x6818*/
SCIENTIFIC-ATLANTA, INC.
INSTRUMENTATION DIVISION
4388 SHACKLEFORD RD
NORCROSS, GA 30093
Title
DAS MOTHERBOARD: TERMINATOR SLOT 1
Size C
Document Number 328084
REV
Date: December 8, 1988 Sheet 16 of 20

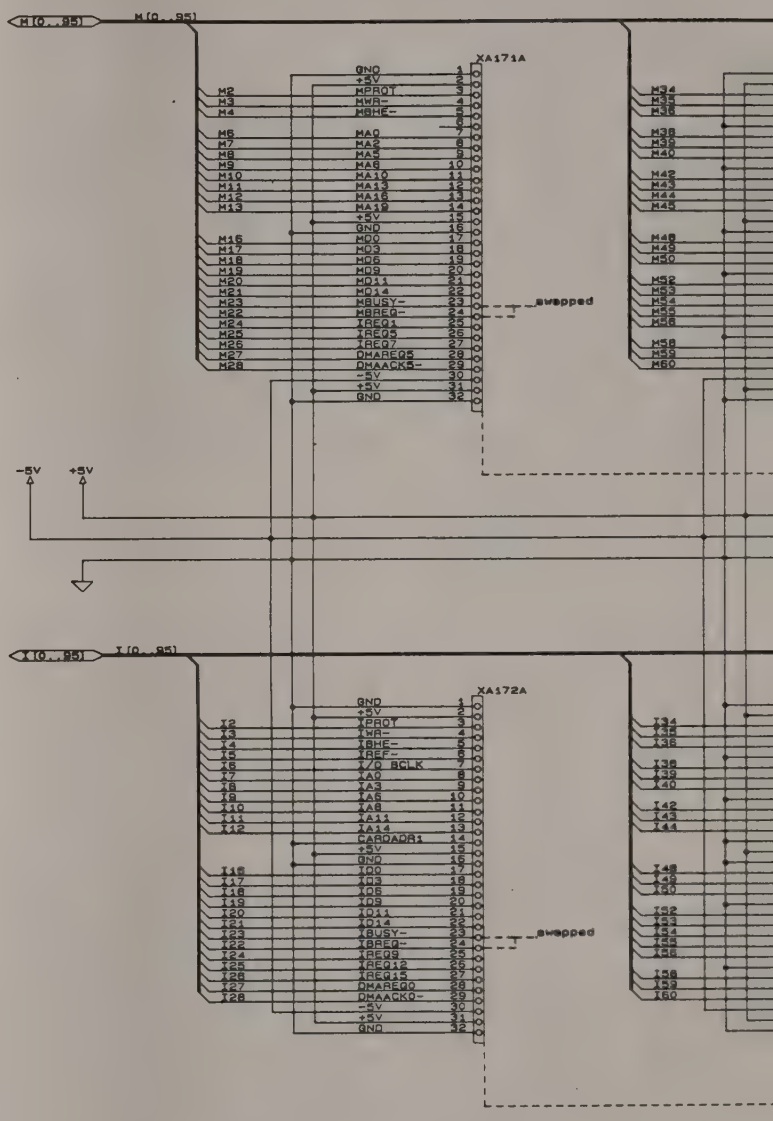
M[0..95]
XA171A
GND
+5V
MPROT
MWR-
MBHE-
MA0
MA2
MA5
MA6
MA10
MA13
MA16
MA19
+5V
GND
MD0
MD3
MD6
MD9
MD11
MD14
MBUSY-
MBREQ-
IREQ1
IREQ5
IREQ7
DMAREQ5
DMAACK5-
-5V
+5V
GND
swapped
-5V
+5V
I[0..95]
XA172A
GND
+5V
IPROT
IWR-
IBHE-
IREF-
I/O BCLK
IA0
IA3
IA5
IA8
IA11
IA14
CARDADR1
+5V
GND
ID0
ID3
ID6
ID9
ID11
ID14
IBUSY-
IBREQ-
IREQ9
IREQ12
IREQ15
DMAREQ0
DMAACK0-
-5V
+5V
GND
swapped

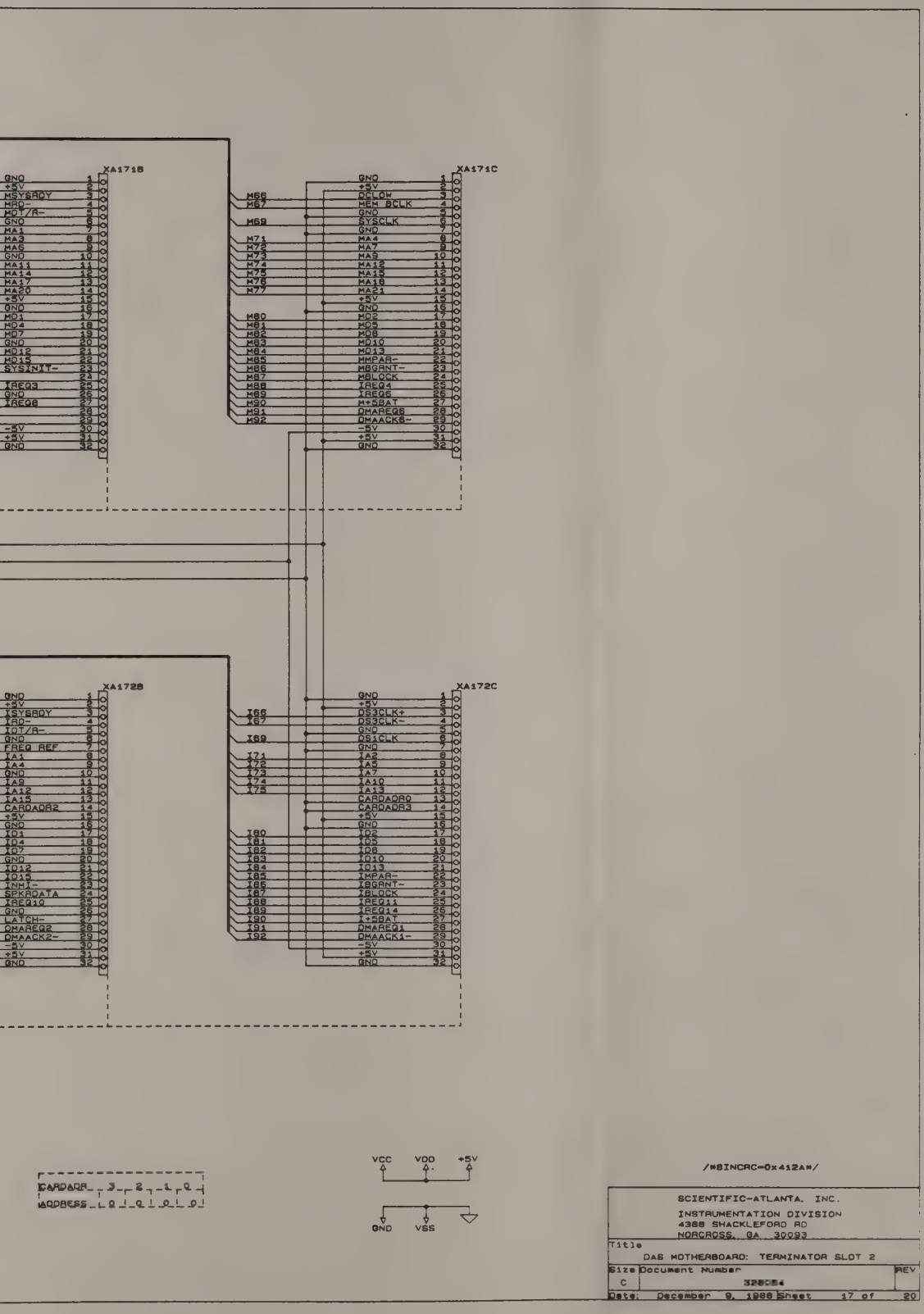

/*8INCRC-0x412A*/

SCIENTIFIC-ATLANTA, INC.
INSTRUMENTATION DIVISION
4386 SHACKLEFORD RD
NORCROSS, GA 30093

Title
DAS MOTHERBOARD: TERMINATOR SLOT 2

Size	Document Number	REV
C	328284	

Date: December 9, 1988 Sheet 17 of 20

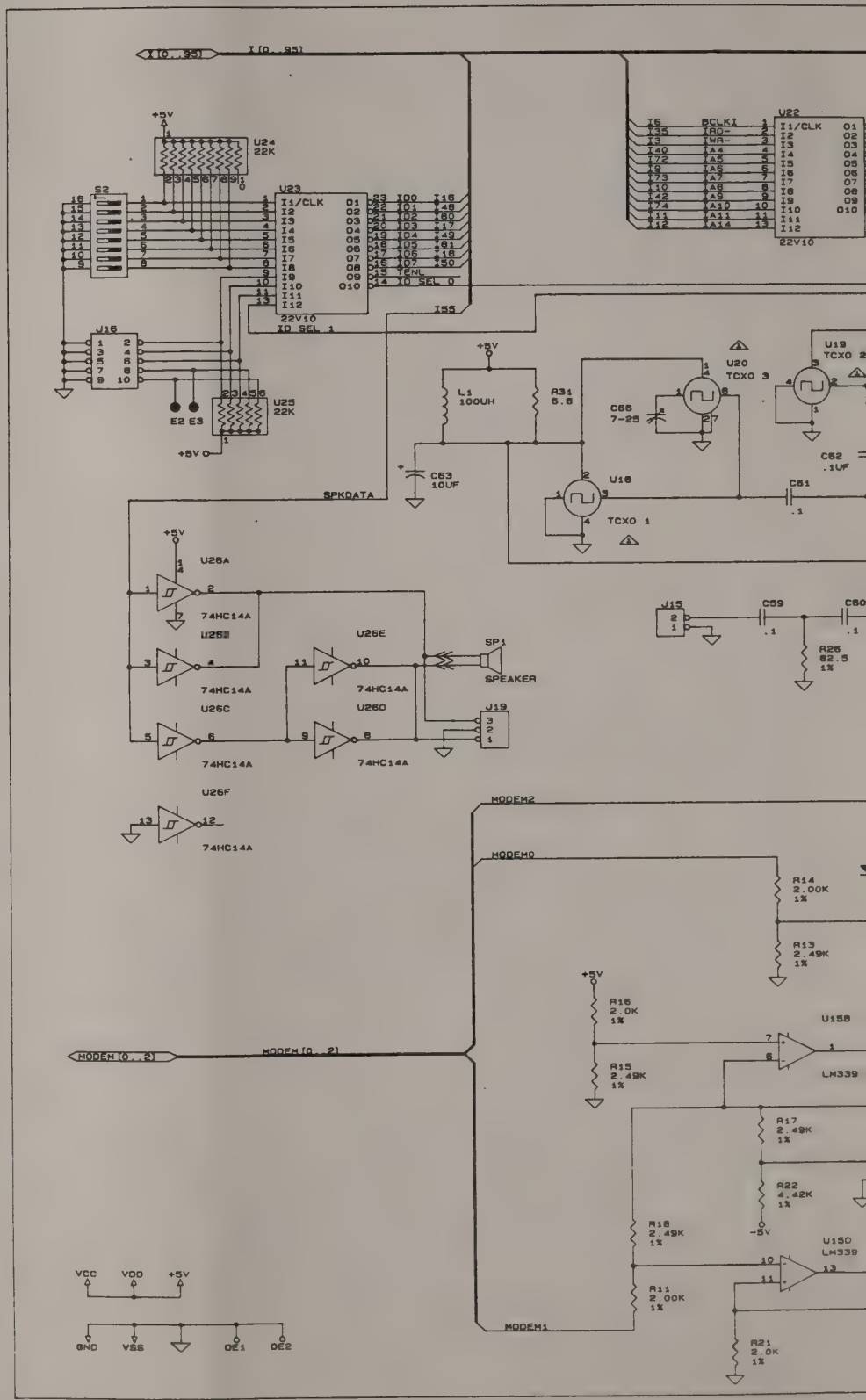
I[0..9]
+5V
U24
22K
S2
U23
I1/CLK
22V10
ID_SEL_1
I55
U22
BCLKI
RD-
WR-
22V10
U16
E2 E3
U25
22K
+5V
L1
100UH
R31
6.8
C63
10UF
SPKDATA
U20
TCXO 3
C65
7-25
U19
TCXO 2
C62
.1UF
U18
TCXO 1
C61
.1
U26A
74HC14A
U26B
U26E
U26C
U26D
U26F
SP1
SPEAKER
J19
J15
C59
C60
R26
82.5
1%
MODEM2
MODEM0
R14
2.00K
1%
R13
2.49K
1%
R16
2.0K
1%
R15
2.49K
1%
MODEM[0..2]
U15B
LM339
R17
2.49K
1%
R22
4.42K
1%
R18
2.49K
1%
-5V
U15D
LM339
R11
2.00K
1%
MODEM1
R21
2.0K
1%
VCC
VDD
+5V
GND
VSS
OE1
OE2

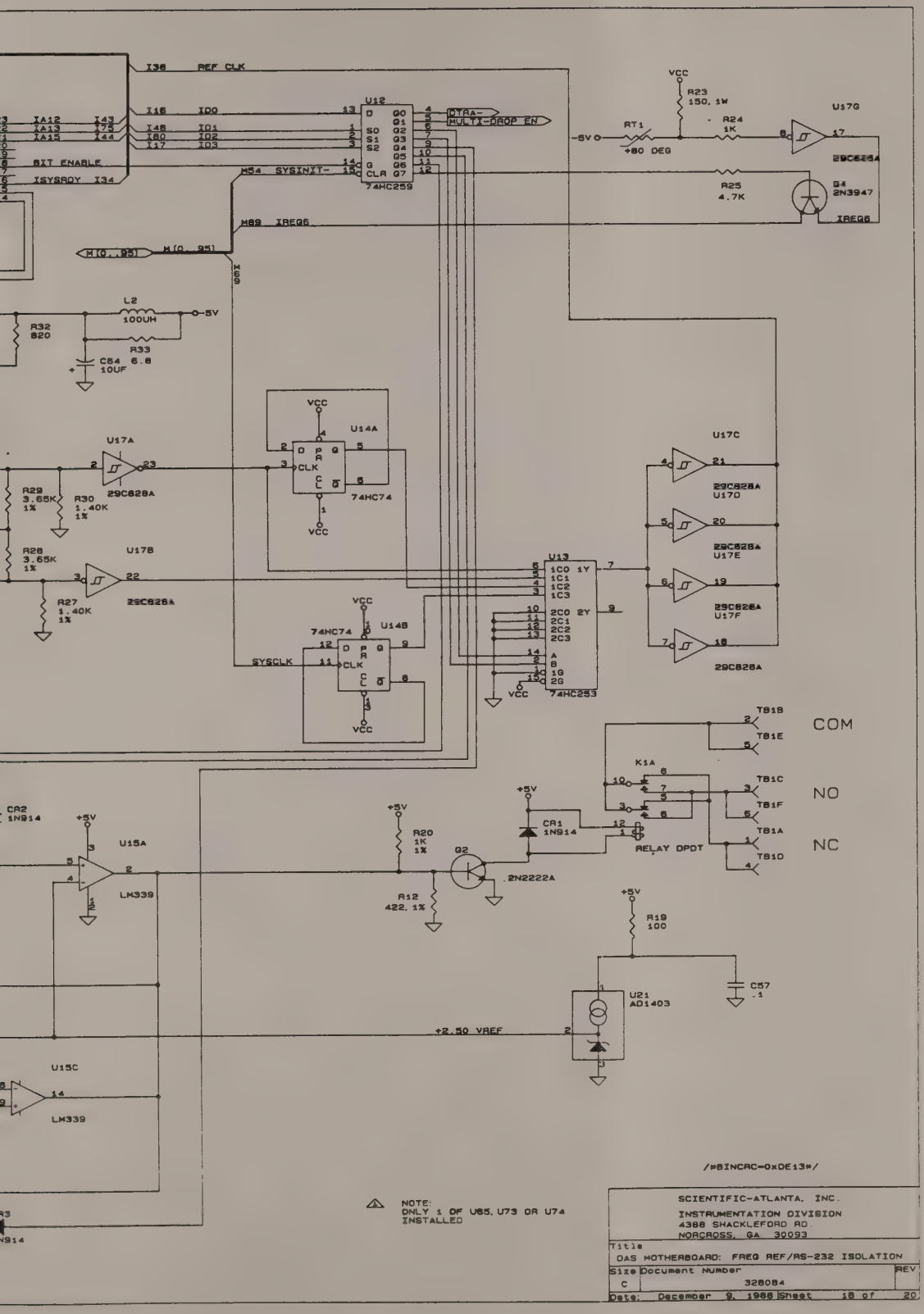
I36 REF CLK
I16 IDO
I48 ID1
I80 ID2
I17 ID3
BIT ENABLE
ISYSRDY I34
M54 SYSINIT-
M89 IREQ6
M(0..95)
U12
74HC259
DTAA-
MULTI-DROP EN
VCC
R23
150, 1W
R24
1K
RT1
+80 DEG
-5V
U17G
29C828A
R25
4.7K
Q4
2N3947
IREQ6
L2
100UH
+5V
R32
820
R33
C84 6.8
100UF
U17A
29C828A
R29
3.65K
1%
R30
1.40K
1%
R28
3.65K
1%
R27
1.40K
1%
U17B
U14A
74HC74
U14B
SYSCLK
U13
74HC253
U17C
U17D
U17E
U17F
TB1B
TB1E
COM
K1A
TB1C
TB1F
NO
TB1A
TB1D
NC
RELAY DPDT
CR1
1N914
CR2
1N914
U15A
LM339
U15C
R20
1K
1%
Q2
2N2222A
R12
422, 1%
R19
100
C57
.1
U21
AD1403
+2.50 VREF
/*$INCAC=0xDE13*/
NOTE:
ONLY 1 OF U65, U73 OR U74
INSTALLED
SCIENTIFIC-ATLANTA, INC.
INSTRUMENTATION DIVISION
4388 SHACKLEFORD RD.
NORCROSS, GA 30093
Title
DAS MOTHERBOARD: FREQ REF/RS-232 ISOLATION
Size C
Document Number 328084
REV
Date: December 9, 1988 Sheet 18 of 20

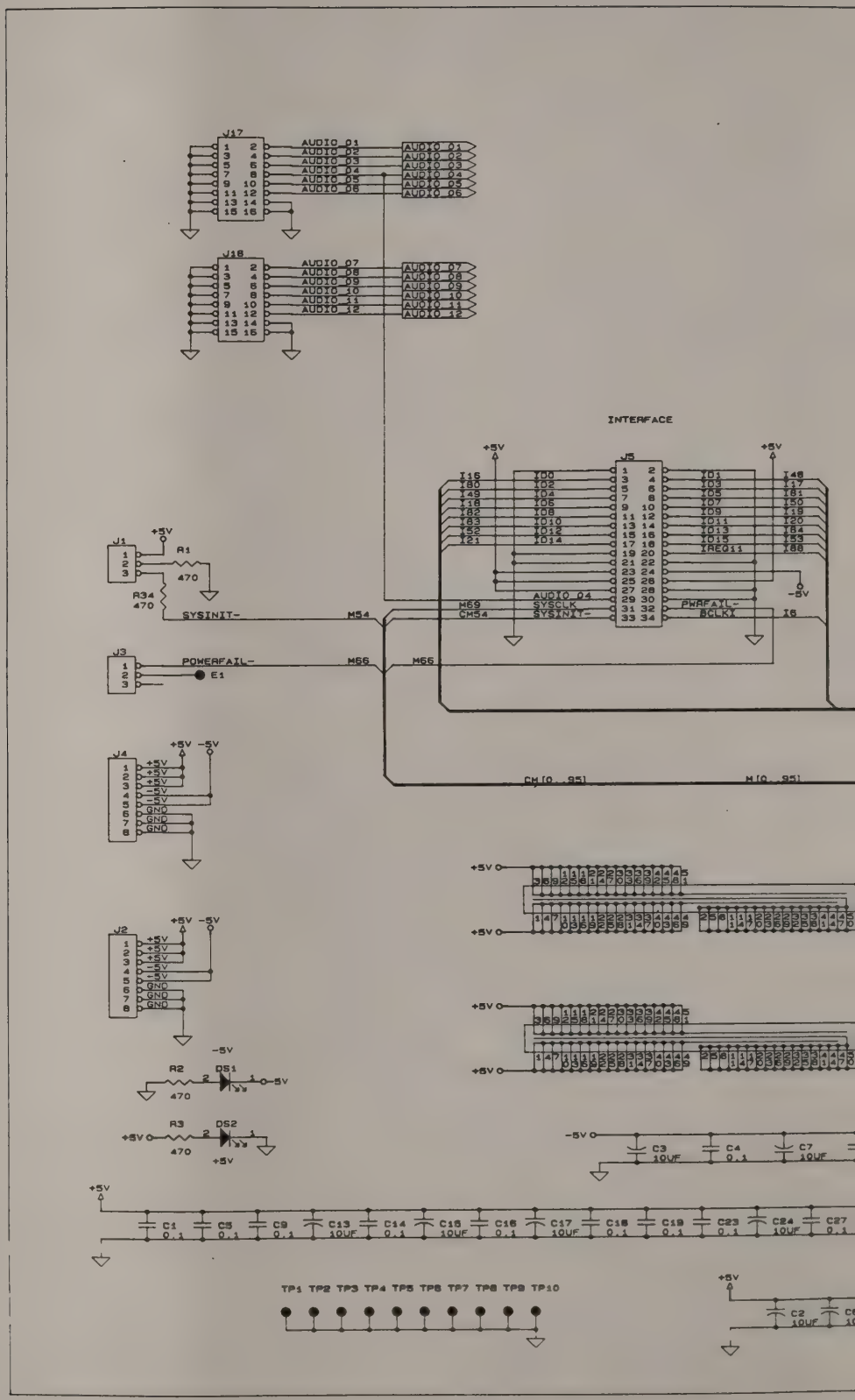
J17
AUDIO_01
AUDIO_02
AUDIO_03
AUDIO_04
AUDIO_05
AUDIO_06
J18
AUDIO_07
AUDIO_08
AUDIO_09
AUDIO_10
AUDIO_11
AUDIO_12
INTERFACE
J5
+5V
-5V
AUDIO_04
SYSCLK
SYSINIT-
PWRFAIL-
BCLKX
J1
R1
470
R34
470
SYSINIT-
M54
J3
POWERFAIL-
E1
M66
J4
J2
R2
470
DS1
R3
470
DS2
CM[0..95]
M[0..95]
C1
C3
C4
C5
C7
C9
C13
C14
C15
C16
C17
C18
C19
C23
C24
C27
TP1 TP2 TP3 TP4 TP5 TP6 TP7 TP8 TP9 TP10
C2

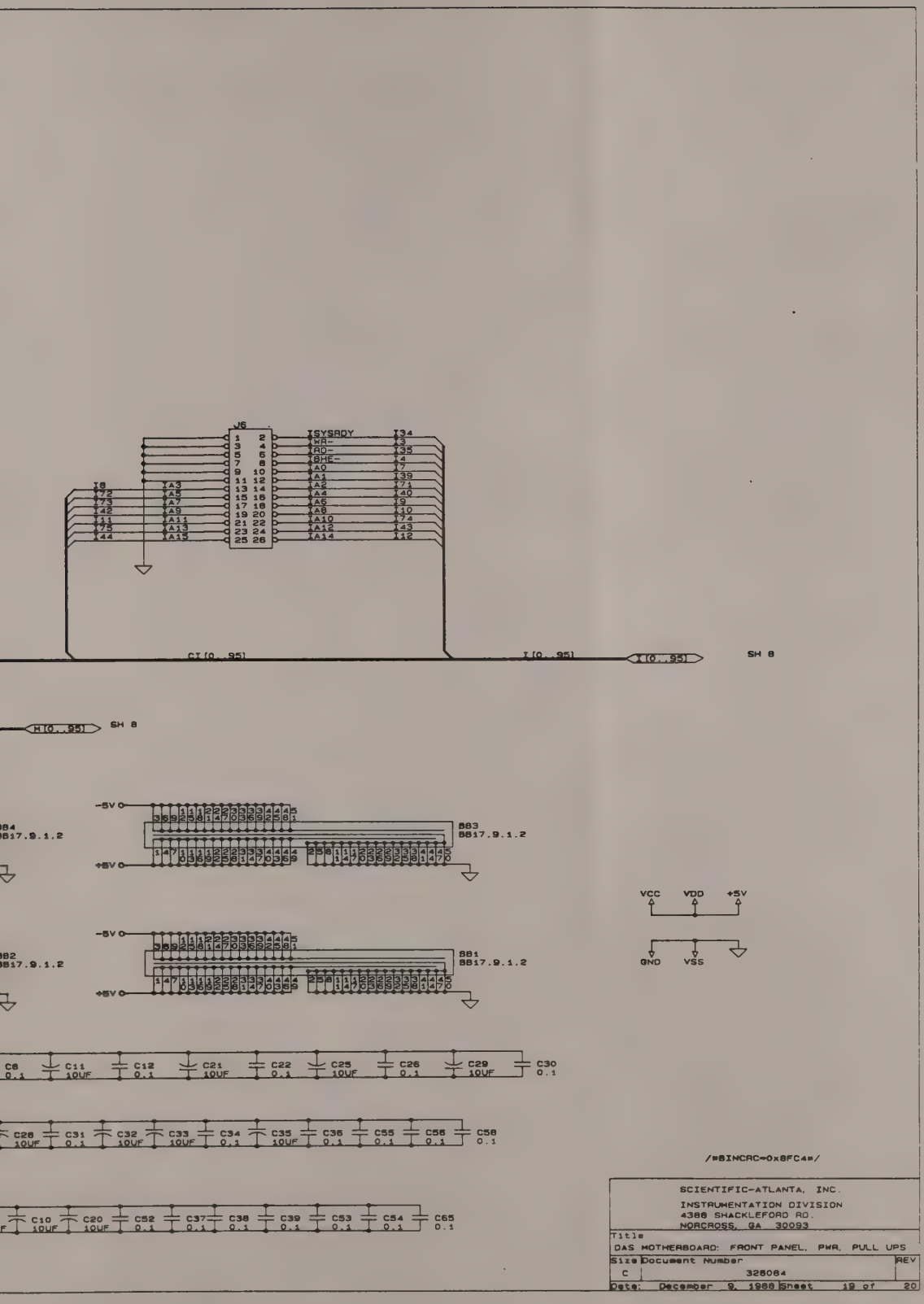

/*$INCRC=0x8FC4*/

SCIENTIFIC-ATLANTA, INC.
INSTRUMENTATION DIVISION
4386 SHACKLEFORD RD.
NORCROSS, GA 30093

Title
DAS MOTHERBOARD: FRONT PANEL, PWR, PULL UPS

Size	Document Number	REV
C	328084	

Date: December 9, 1988 Sheet 19 of 20

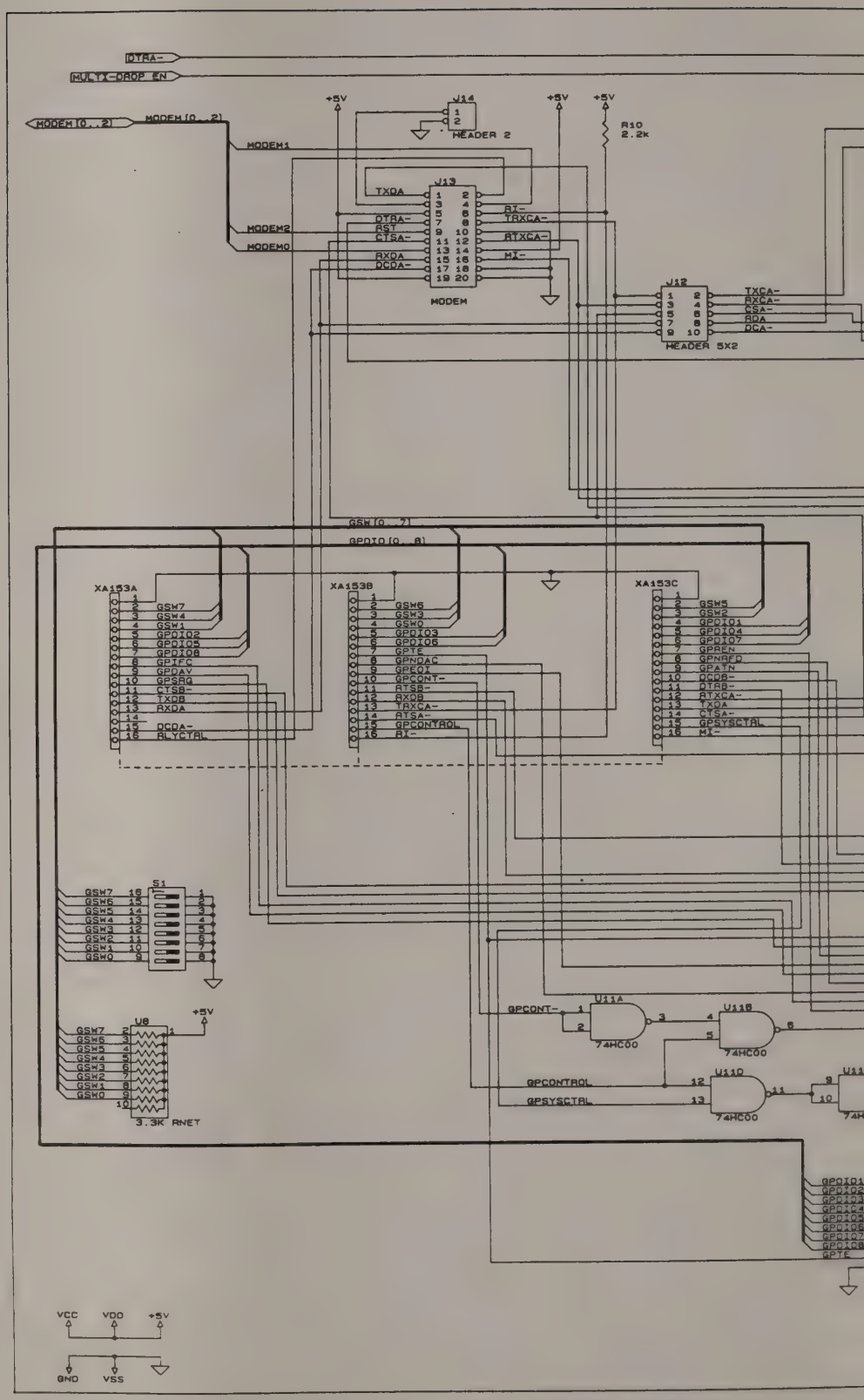
DTRA-
MULTI-DROP EN
MODEM[0..2]
MODEM[0..2]
MODEM1
MODEM2
MODEM0
+5V
J14
HEADER 2
R10
2.2K
J13
TXDA
DTRA-
RST
CTSA-
RXDA
DCDA-
RI-
TRXCA-
RTXCA-
MI-
MODEM
J12
TXCA-
RXCA-
CSA-
RDA
DCA-
HEADER 5X2
GSW[0..7]
GPDIO[0..8]
XA153A
GSW7
GSW4
GSW1
GPDIO2
GPDIO5
GPDIO8
GPIFC
GPDAV
GPSRQ
CTSB-
TXDB
RXDA
DCDA-
RLYCTRL
XA153B
GSW6
GSW3
GSW0
GPDIO3
GPDIO6
GPTE
GPNDAC
GPEOI
GPCONT-
RTSB-
RXDB
TRXCA-
ATSA-
GPCONTROL
RI-
XA153C
GSW5
GSW2
GPDIO1
GPDIO4
GPDIO7
GPREN
GPNRFD
GPATN
DCDB-
DTRB-
RTXCA-
TXDA
CTSA-
GPSYSCTRL
MI-
S1
GSW7
GSW6
GSW5
GSW4
GSW3
GSW2
GSW1
GSW0
U8
3.3K RNET
U11A
74HC00
U11B
U11D
GPCONT-
GPCONTROL
GPSYSCTRL
GPDIO1
GPDIO2
GPDIO3
GPDIO4
GPDIO5
GPDIO6
GPDIO7
GPDIO8
GPTE
VCC
VDD
+5V
GND
VSS

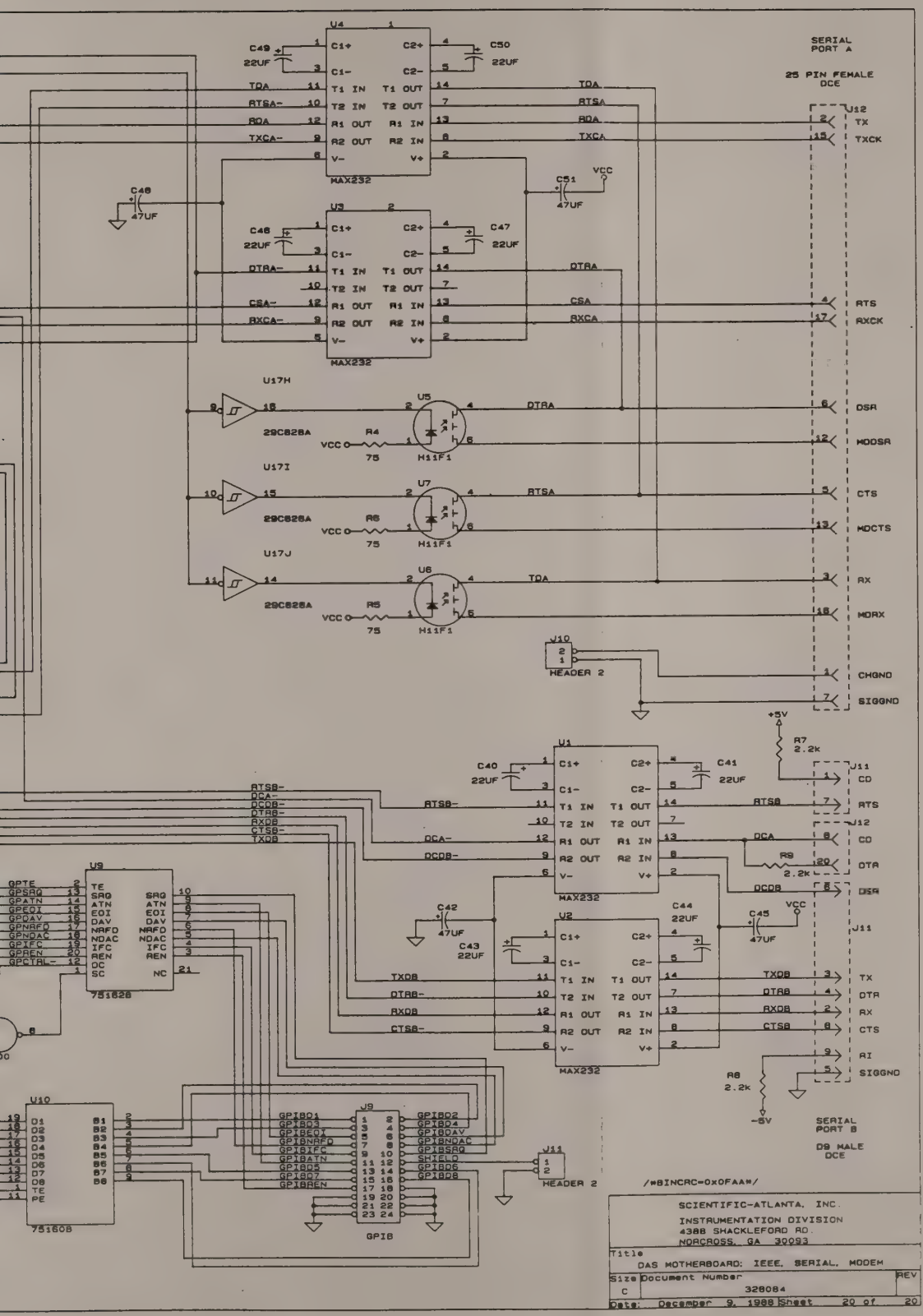
SERIAL PORT A
25 PIN FEMALE DCE
U4
MAX232
U3
MAX232
U17H
29C828A
U17I
29C828A
U17J
29C828A
U5
H11F1
U7
H11F1
U6
H11F1
U1
MAX232
U2
MAX232
U9
751628
U10
751608
J9
GPIB
J10
HEADER 2
J11
HEADER 2
J11
SERIAL PORT B
D9 MALE DCE
/*BINCRC=0x0FAA*/
SCIENTIFIC-ATLANTA, INC.
INSTRUMENTATION DIVISION
4388 SHACKLEFORD RD.
NORCROSS, GA 30093
Title
DAS MOTHERBOARD: IEEE, SERIAL, MODEM
Size C
Document Number 328084
REV
Date: December 9, 1988
Sheet 20 of 20

NOTES:

1. APPLY ITEM 12 TO FRONT COVER (ITEM 9) NEAR TOP IN THE CENTER APPROX AS SHOWN.

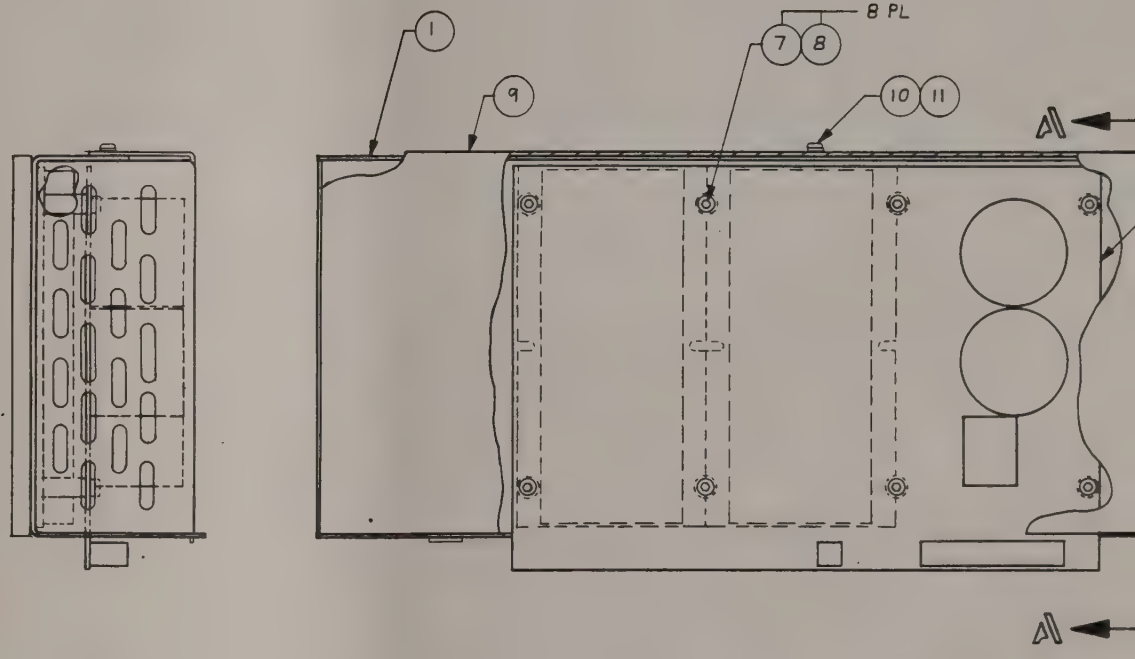

DWG NO 306187 SH 1 REV -

APPLICATION			REVISIONS				
QTY REQD	NEXT ASSY	USED ON	ZONE	REV	DESCRIPTION	DATE	APPROVED
1	306200	AT 9000		-	INITIAL RELEASE		

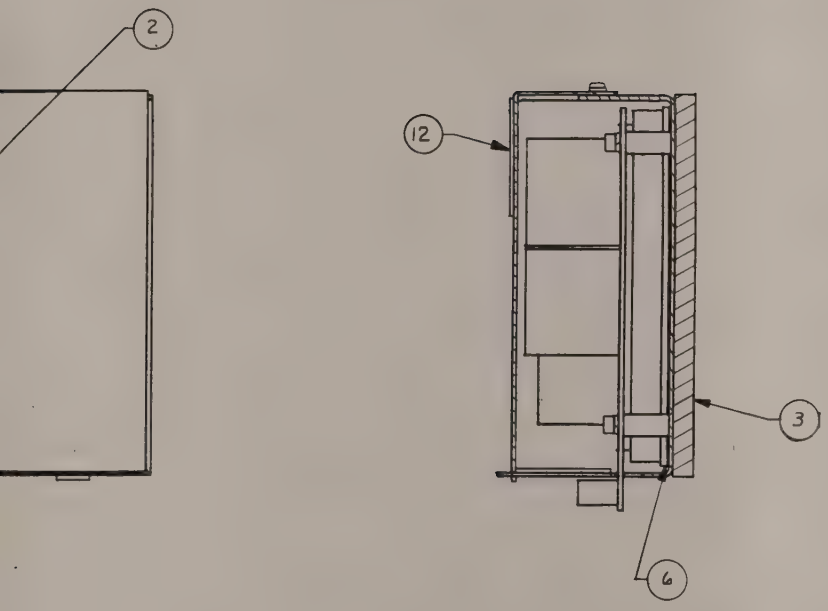

SEE SEPARATE PARTS LIST

PARTS LIST

ITEM OR FIND NO	QTY REQD	S-A STOCK NO	NOMENCLATURE OR DESCRIPTION	MATL SPEC AND SIZE OR COMPONENT VALUE	IDENTIFYING OR PART NO	FSCM NO

UNLESS OTHERWISE SPECIFIED ALL CAPACITORS ARE IN MICROFARADS AND ALL RESISTORS ARE IN OHMS, ±10% AND 1/4 WATT

LAST REFERENCE DESIGNATION USED

C	CR	J	K
Q	R	S	U

ALL DIMENSIONS ARE IN INCHES UNLESS OTHERWISE SPECIFIED

TOLERANCES

3 PLACE DECIMAL ±.005
2 PLACE DECIMAL ±.02
1 PLACE DECIMAL ±.1

FRACTIONS ± ANGLES ±0° 30'

MAX SURFACE ROUGHNESS ALL MACHINED SURFACES EXCEPT AS NOTED 125

BREAK SHARP EDGES AND CORNERS .010 MAX

FINISH NONE

CONTRACT NO

DWN Ted Smith 11-8-86
ENGR 12/3/86
CHK 12-6-86
PROD
APVD P. Spinelle
APVD

Scientific-Atlanta 3845 Pleasantdale Road Atlanta, Georgia 30340

POWER SUPPLY ASSY

AC DAS

SIZE D | FSCM NO 10110 | DWG NO 306187 | REV -

SCALE 1/1 | SHEET 1 OF 1

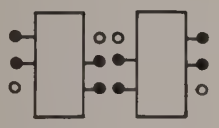

FIGURE 1

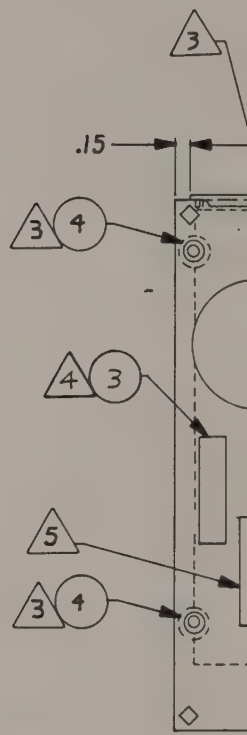

NOTES:

1. NOT INSTALLED ITEMS NOTED ON PARTS LIST.
2. IF FREON IS USED FOR CLEANING: INSTALL RT2 AFTER WAVE SOLDER & CLEANING PROCESS. DO NOT ALLOW CL FLUID OR VAPOR TO CONTACT THE BODY OF RT2.
3. AFTER WAVE SOLDER INSTALL ITEMS 3,4,5,6,U1,AND U2 ON FARSIDE OF PWB. INSTALL U1 U2 AFTER FIRST TEST
4. INSTALL ASSEMBLY NUMBER LABEL OVER "AC/DC 327911 AC OI 327935."
5. INSTALL L3 AND L4 AS SHOWN IN FIG. 1 WHICH BEST ALIGNS THESE ITEMS WITH SILK SCREEN OUTLINE.
6. SEE SH 2
7. SEE SH 2
8. INSTALL K1 AFTER WAVE SOLDER & CLEANING.

APPLICATION			REVISIONS				
QTY REQD	NEXT ASSY	USED ON	ZONE	REV	DESCRIPTION	DATE	APPROVED
1	306187	AT9000		–	INITIAL RELEASE		
				A	ECO 11004	7/9/90	
				B	ECO 11221	7/27/90	

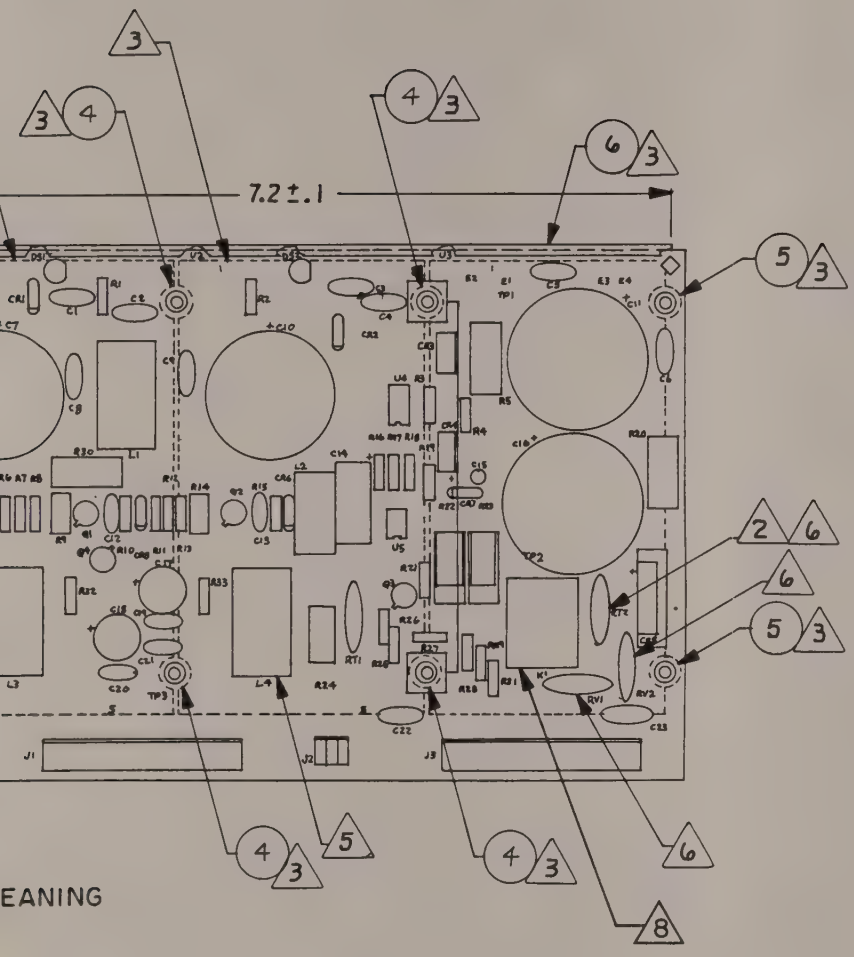

EANING

ILY

SEE SEPARATE PARTS LIST (1)

ITEM OR FIND NO.	QTY REQD	S-A STOCK NO	NOMENCLATURE OR DESCRIPTION	MATL SPEC AND SIZE OR COMPONENT VALUE	IDENTIFYING OR PART NO	FSCM NO

PARTS LIST

UNLESS OTHERWISE SPECIFIED ALL CAPACITORS ARE IN MICROFARADS AND ALL RESISTORS ARE IN OHMS ±10% AND 1/4 WATT

LAST REFERENCE DESIGNATION USED

C	CR	J	K
Q	R	S	U

ALL DIMENSIONS ARE IN INCHES UNLESS OTHERWISE SPECIFIED

TOLERANCES
2 PLACE DECIMAL ± .005
3 PLACE DECIMAL ± .02
1 PLACE DECIMAL ± 1

FRACTIONS ± ANGLES ± 30

MAX SURFACE ROUGHNESS 125 ALL MACHINED SURFACES EXCEPT AS NOTED

BREAK SHARP EDGES AND CORNERS .010 MAX

FINISH NONE

CONTRACT NO

DWN	Ted Smith	11-9-88
ENGR		5/19/89
CHK		12-1-89
PROD		5-8-90
APVD	B. Spindle	
APVD		

Scientific-Atlanta 3845 Pleasantdale Road Atlanta, Georgia 30340

PWB ASSY- POWER SUPPLY

DAS

SIZE	FSCM NO	DWG NO	REV
C	10110	306178	B

SCALE NONE SHEET 1 OF 2

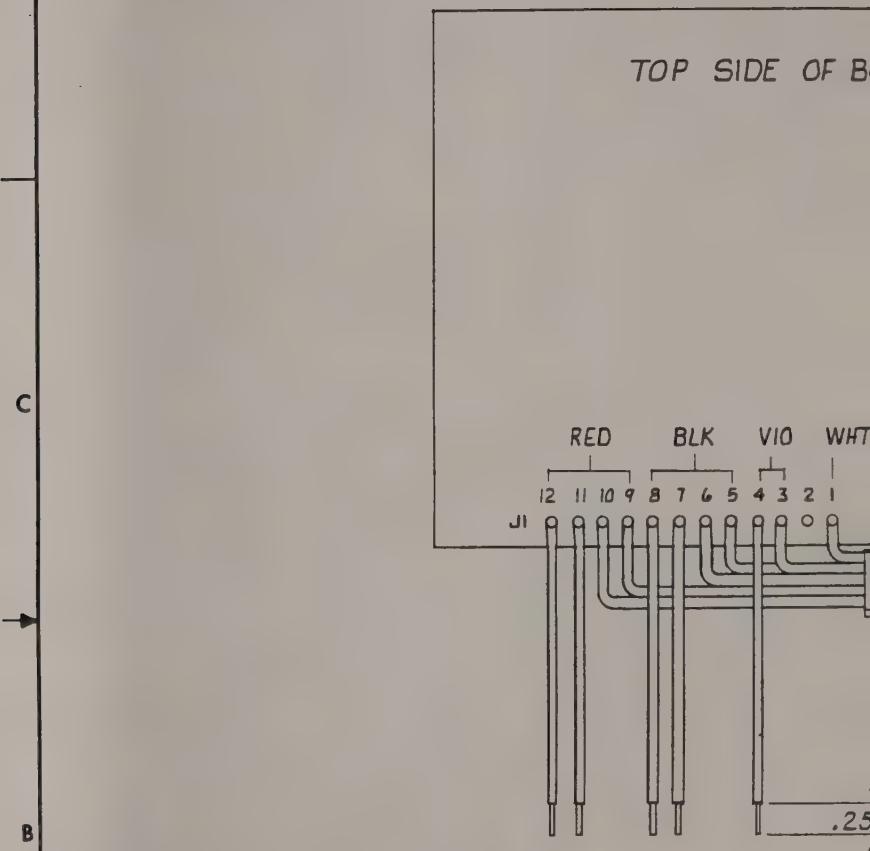

WIRE LIST FOR J1				
PIN NO.	LENGTH	COLOR	COMMENTS	GUAGE
1	8.50	WHITE	TO BACK OF CONNECTOR P1-1	22
2	———	———	———	———
3	8.50	VIOLET		16
4	5.00"	VIOLET		16
5	8.50	BLACK		16
6	8.50	BLACK		16
7	5.00"	BLACK		16
8	5.00"	BLACK		16
9	8.50	RED		16
10	8.50	RED		16
11	5.00	RED		16
12	5.00	RED		16

NOTES:

1. SEE SH1
2. SEE SH1
3. SEE SH1
4. SEE SH1
5. SEE SH1
6. CUT ALL W ONE END SOLDER A
7. CUT ALL AFTER

APPLICATION		
QTY REQD	NEXT ASSY	USED ON
1	306187	AT9000

REVISIONS				
ZONE	REV	DESCRIPTION	DATE	APPROVED
	-	INITIAL RELEASE		
	A	SEE SH1		
	B	SEE SH1	9/27/90	[illegible]

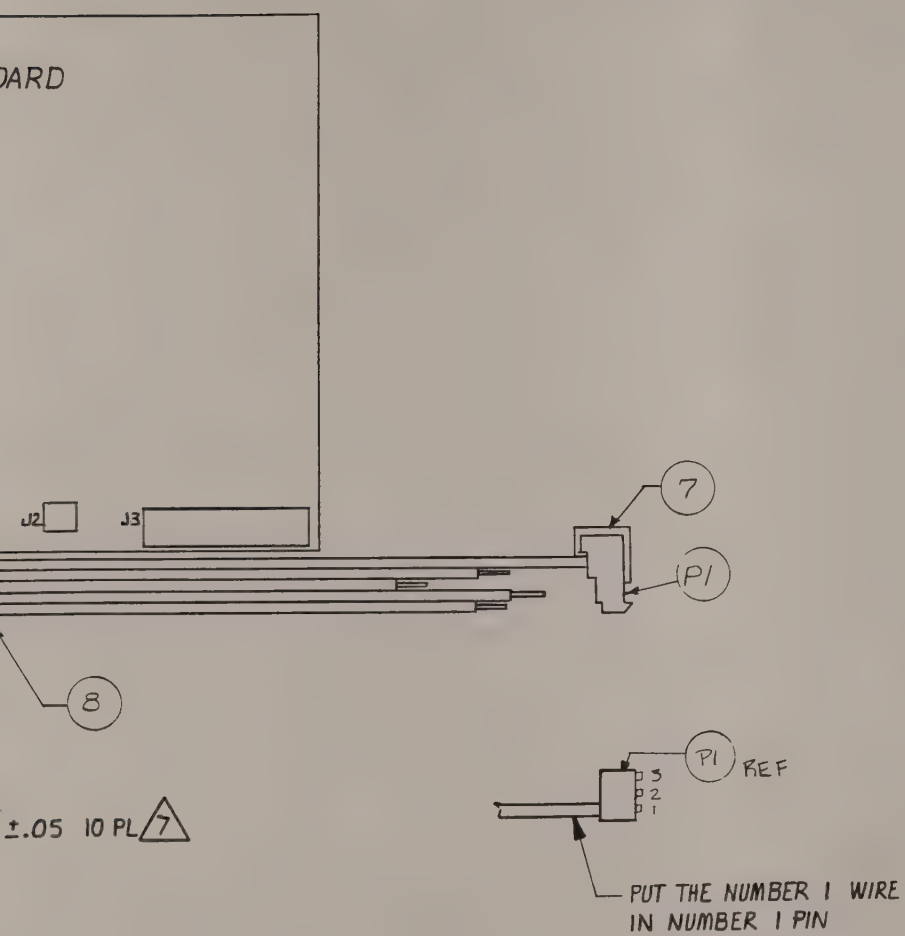

RES 9.0, STRIP AND TIN
250, INSTALL PER CHART,
D CUT TO CHART DIM.

WIRE ENDS TO .25 ±.05
ASSEMBLY.

ITEM OR FIND NO.	QTY REQD	S-A STOCK NO	NOMENCLATURE OR DESCRIPTION	MATL SPEC AND SIZE OR COMPONENT VALUE	IDENTIFYING OR PART NO	FSCM NO

PARTS LIST

UNLESS OTHERWISE SPECIFIED ALL CAPACITORS ARE IN MICROFARADS AND ALL RESISTORS ARE IN OHMS, ±10% AND 1/4 WATT

LAST REFERENCE DESIGNATION USED

C CR J K
Q R S U

ALL DIMENSIONS ARE IN INCHES UNLESS OTHERWISE SPECIFIED

TOLERANCES
3 PLACE DECIMAL ± .005
2 PLACE DECIMAL ± .02
1 PLACE DECIMAL ± .1

FRACTIONS ± ANGLES ±0° 30'

MAX SURFACE ROUGHNESS 125
ALL MACHINED SURFACES EXCEPT AS NOTED

BREAK SHARP EDGES AND CORNERS .010 MAX

FINISH NONE

CONTRACT NO

DWN	[illegible]	11-18-89
ENGR	[illegible]	5/16/89
CHK	[illegible]	12-4-89
PROD	[illegible]	5-4-89
APVD	B Sprinkle	
APVD		

Scientific-Atlanta 3845 Pleasantdale Road Atlanta, Georgia 30340

PWB ASSY-POWER SUPPLY

SIZE	FSCM NO	DWG NO	REV
C	10110	306178	B

SCALE 1/1 SHEET 2

4
D
C
B
A
2
U2
U3
U4
U5
U44
4
SA P/N 80083

APPLICATION		
QTY REQD	NEXT ASSY	USED ON
1	327960	AT9500
1	327965	AT9500
1	309100	AT 9500
1	309110	AT 9500

REVISIONS				
ZONE	REV	DESCRIPTION	DATE	APPROVED
	-	INITIAL RELEASE	4-17-89	
	A	ECO 10468 ADDED SH2	5-22-89	
	B	ECO 10492	5-22-89	
	C	ECO 10626	5-22-89	
	D	ECO 10663	7-11-89	
	E	ECO 10673	7-11-89	
	F	ECO 10760	10-11-89	
	G	ECO 10808 ADDED SH3	10-11-89	
	H	ECO 10816	10-11-89	
	J	ECO 10871-872	11-14-89	
	K	ECO 11087	7/10/90	
	L	ECO 11092	7/10/90	
	M	ECO 11097	7/10/90	
	N	ECO 11084	7/10/90	
	P	ECR 11003, 12905, 13146	5/24/91	

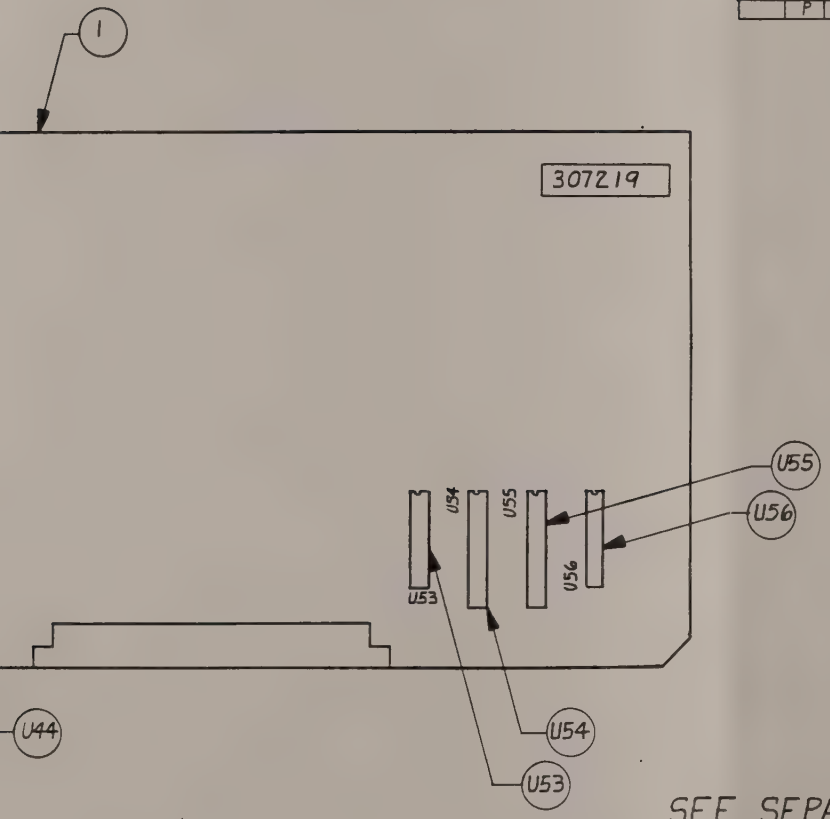

SEE SEPARATE PARTS LIST

ITEM OR FIND NO.	QTY REQD	B-A STOCK NO.	NOMENCLATURE OR DESCRIPTION	MATL SPEC AND SIZE OR COMPONENT VALUE	IDENTIFYING OR PART NO	FSCM NO

PARTS LIST

UNLESS OTHERWISE SPECIFIED ALL CAPACITORS ARE IN MICROFARADS AND ALL RESISTORS ARE IN OHMS ±10% AND 1/4 WATT

LAST REFERENCE DESIGNATION USED

C CR J E

Q R S U

ALL DIMENSIONS ARE IN INCHES UNLESS OTHERWISE SPECIFIED

TOLERANCES

3 PLACE DECIMAL ± .005

2 PLACE DECIMAL ± .02

1 PLACE DECIMAL ± .1

FRACTIONS ± ANGLES ±30'

MAX SURFACE ROUGHNESS ALL MACHINED SURFACES EXCEPT AS NOTED 125 V

BREAK SHARP EDGES AND CORNERS .010 MAX

FINISH NONE

CONTRACT NO

DWN Ted Smith 9-10-89

ENGR

CHK

PROD W. Robinson 9-13-89

APVD B. Sprinkle

APVD

Scientific-Atlanta 3845 Pleasantdale Road Atlanta, Georgia 30340

CPU ASSEMBLY

SIZE	FSCM NO	DWG NO	REV
C	10110	307219	P

SCALE 1/1 SHEET 1 OF 1

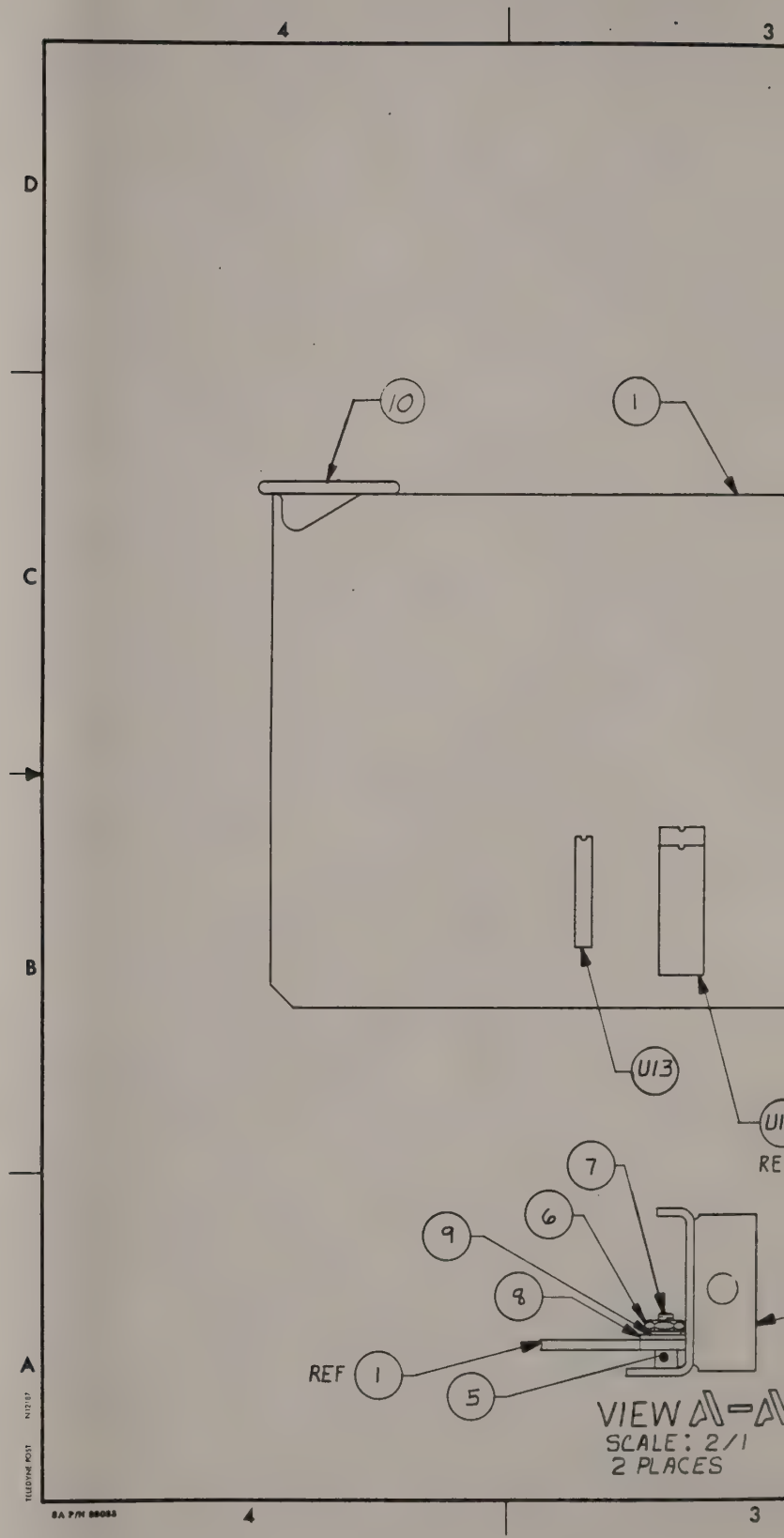

4
3
D
C
B
A
10
1
U13
RE
7
6
9
8
REF
1
5
VIEW A-A
SCALE: 2/1
2 PLACES
TELEDYNE POST

APPLICATION		
QTY REQD	NEXT ASSY	USED ON
	306200	AT9000

REVISIONS				
ZONE	REV	DESCRIPTION	DATE	APPROVED
	-	INITIAL RELEASE ECO 10625	5-30-89	
	A	ECO 10662, ECO 10674	7-6-89	
	B	ECO 10871-872	11-14-89	

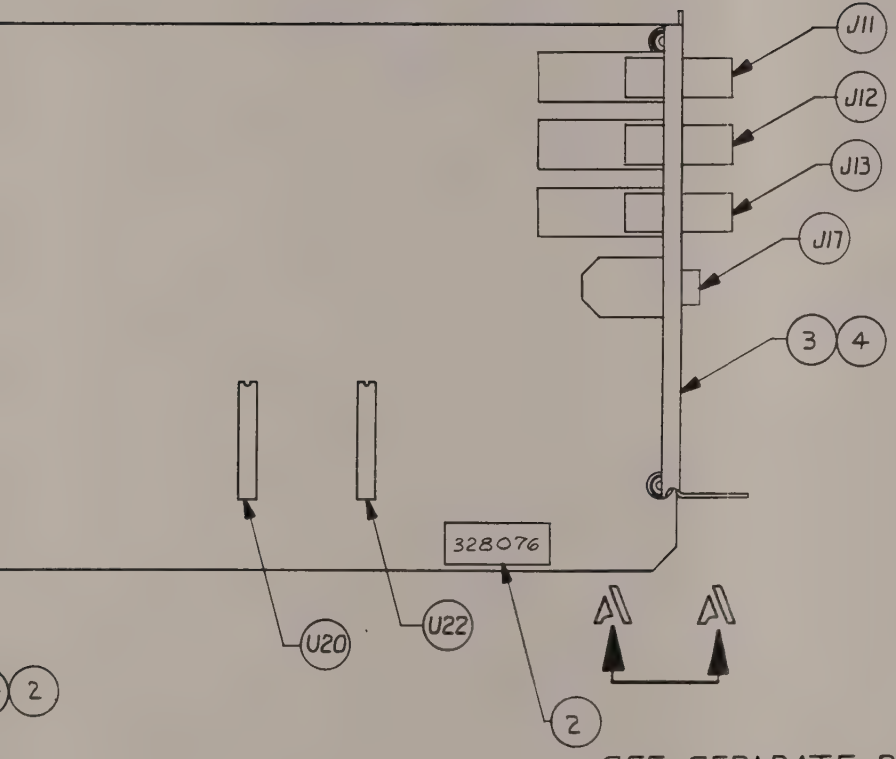

SEE SEPARATE PARTS LIST

3 REF

ITEM OR FIND NO.	QTY REQD	S-A STOCK NO.	NOMENCLATURE OR DESCRIPTION	MATL SPEC AND SIZE OR COMPONENT VALUE	IDENTIFYING OR PART NO	FSCM NO

PARTS LIST

UNLESS OTHERWISE SPECIFIED ALL CAPACITORS ARE IN MICROFARADS AND ALL RESISTORS ARE IN OHMS, ±10% AND 1/4 WATT

LAST REFERENCE DESIGNATION USED

C	CR	J	R
Q	R	S	U

ALL DIMENSIONS ARE IN INCHES UNLESS OTHERWISE SPECIFIED

TOLERANCES
3 PLACE DECIMAL ± .005
2 PLACE DECIMAL ± .02
1 PLACE DECIMAL ± 1

FRACTIONS ± ANGLES ±2°

MAX SURFACE ROUGHNESS 125 ALL MACHINED SURFACES EXCEPT AS NOTED

BREAK SHARP EDGES AND CORNERS .010 MAX

FINISH NONE

CONTRACT NO

DWN Ted Smith 11-8-88

ENGR

CHK 11-17-88

PROD 5-4-89

APVD

APVD

Scientific-Atlanta 3845 Pleasantdale Road Atlanta, Georgia 30340

PWB ASSY XMTR DAS

SIZE C | FSCM NO 10110 | DWG NO 328076 | REV E

SCALE 1/1 | SHEET 1 OF 1

DWG NO 328076 REV B SH 1

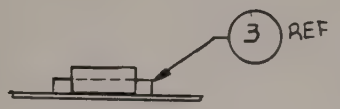

VIEW A-A
SCALE: NONE

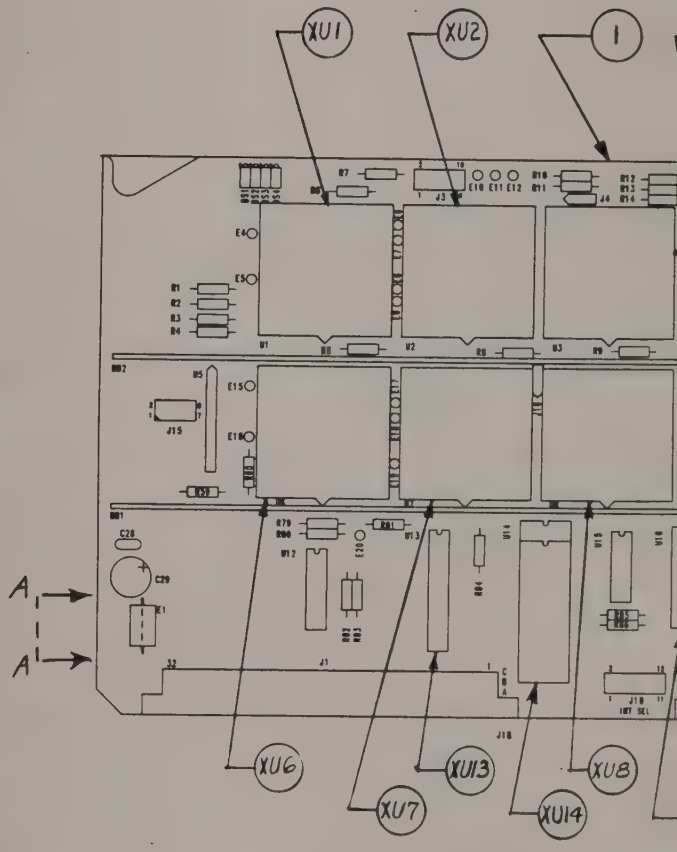

NOTES :

1. INSTALL XU1, XU2, XU3, XU6, XU7, XU8, XU13, XU14, XU16, XU17, XU18, XU19, XU20, XU21, AND XU22 *BEFORE* WAVE SOLDER.
2. INSTALL U1, U2, U3, U6, U7, U8, U16, U17, U18, U19, 20, AND U21 AFTER WAVE SOLDER.
3. INSTALL U13, U14, U20, AND U22 AT NEXT ASSY.
4. INSTALL ITEM 2 BEFORE AND UNDER U4 AND U11.
5. PARTS MAY BE SHOWN BUT NOT USED CHECK PARTS LIST FOR CLARIFICATION.
6. ON ITEMS Q1 Q6 Q7 Q9 Q10 Q11. WITH LONG LEAD TO RIGHT, CUT TOP EMITTER LEAD OFF.
7. FOR ITEMS E1, E2, E3, SEE VIEW A-A.

REV	DESCRIPTION	APPROVAL	DATE
A	ECO 10505		3-22-89
B	ECO 10686		9/5/89

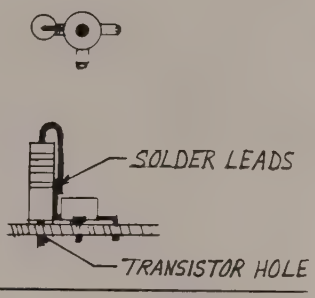

FIG. 1 (8)

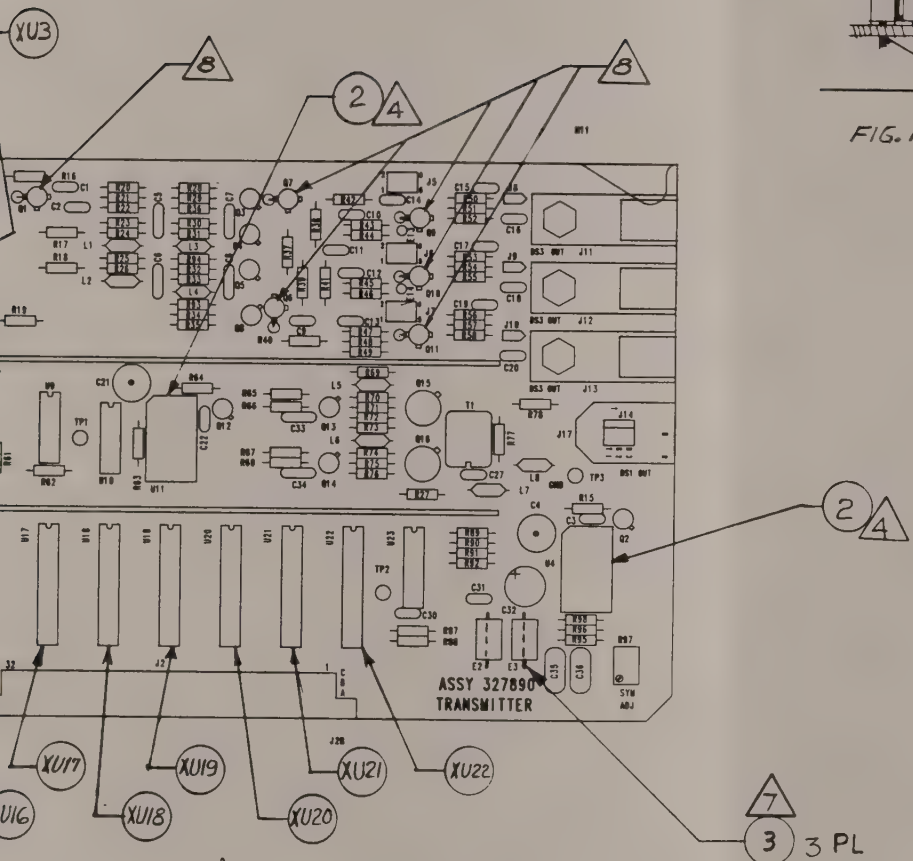

(8) ADD RESISTOR AS SHOWN IN FIG. 1.
(R99 – R104)

MODIFICATIONS FOR 327889 B

9. CUT RUN FROM U1-27 TO U2-27.
10. CUT RUN FROM U2-27 TO U9-2.
11. CUT RUN FROM U6-27 TO U7-27.
12. CUT RUN FROM U7-27 TO U9-5.
13. ADD WIRE FROM U1-27 TO U9-2.
14. ADD WIRE FROM U9-3 TO FEED THRU HOLE BESIDE U9-2. (FEED THRU CONNECTS TO U2-27).
15. ADD WIRE FROM U6-27 TO U9-5.
16. ADD WIRE FROM U9-6 TO U7-27.

SEE SEPARATE PARTS LIST

UT EMITTER
EAD

ONGEST LEAD
O RIGHT

DWN	10-6-88	Scientific-Atlanta	
ENGR	1/10/89	P.O.BOX 105027 ATLANTA, GA 30348	
CHK	1-12-89	PWB SUB ASSY-	
PROD	2-21-89	DS1/DS3 XMTR DTA	
APVD	FSCM NO.	SCALE NONE	DWG. NO. 327890 REV B
SOURCE	10110	SHT 1 OF 1	

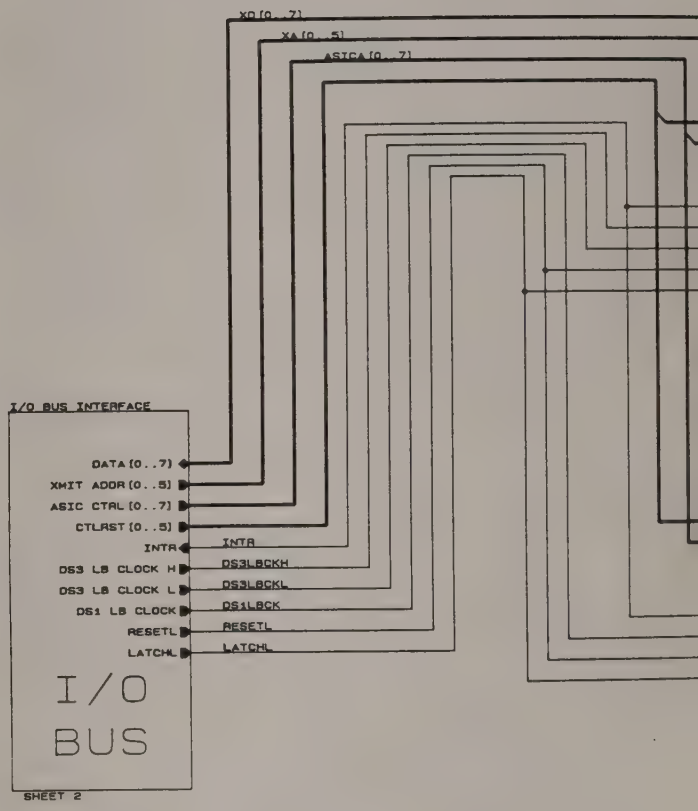
XD[0..7]
XA[0..5]
ASICA[0..7]
I/O BUS INTERFACE
DATA[0..7]
XMIT ADDR[0..5]
ASIC CTRL[0..7]
CTLRST[0..5]
INTR
DS3 LB CLOCK H
DS3 LB CLOCK L
DS1 LB CLOCK
RESETL
LATCHL
INTR
DS3LBCKH
DS3LBCKL
DS1LBCK
RESETL
LATCHL
I/O
BUS
SHEET 2

APPLICATION			REVISIONS				
QTY REQD	NEXT ASSY	USED ON	ZONE	REV	DESCRIPTION	DATE	APVD
				C	SEE ECO 10643		

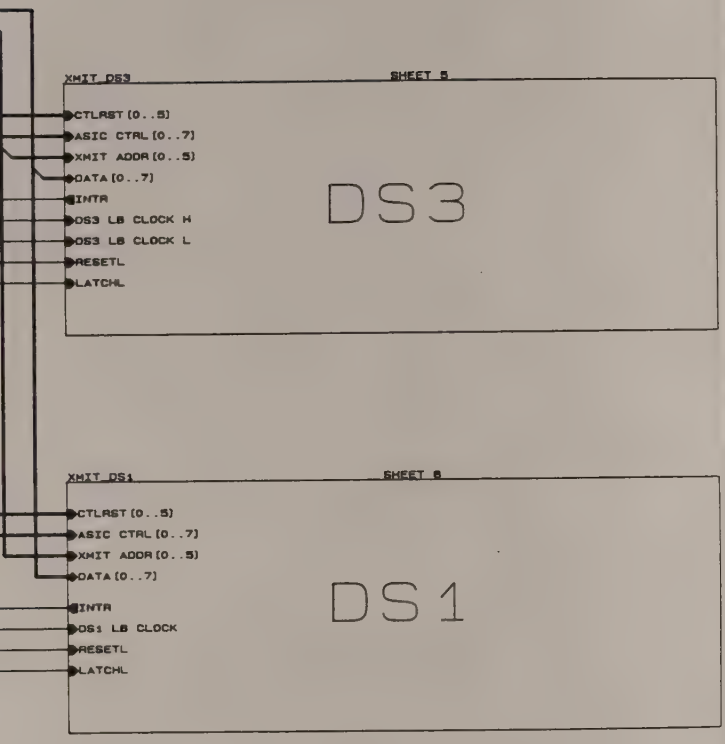

/*$INCRC=0x7165*/

OWN	GLENN TRIBBLE	2-24-89
ENGR		
CHK		
PROD		
APVD	B. Spindle	
APVD		

SCIENTIFIC-ATLANTA, INC.
INSTRUMENTATION DIVISION
4386 SHACKLEFORD RD.
NORCROSS, GA 30093

Title: TRANSMIT CARD: TOP LEVEL

Size	Document Number	REV
C	327686	C

Date: July 6, 1989 Sheet 1 of 10

TXMI

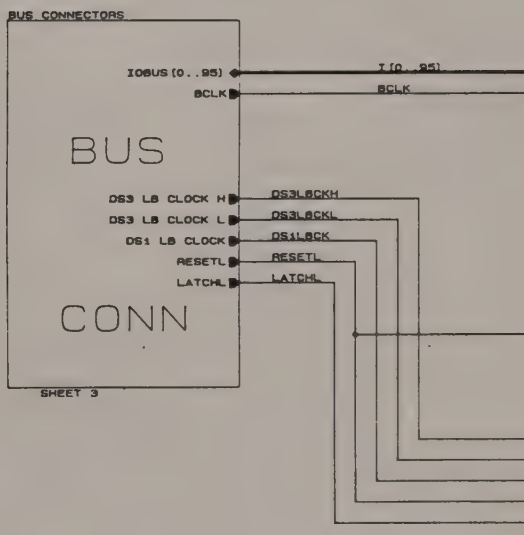
BUS CONNECTORS
IOBUS(0..95)
BCLK
BUS
DS3 LB CLOCK H
DS3 LB CLOCK L
DS1 LB CLOCK
RESETL
LATCHL
CONN
SHEET 3
I(0..95)
BCLK
DS3LBCKH
DS3LBCKL
DS1LBCK
RESETL
LATCHL

T BUS

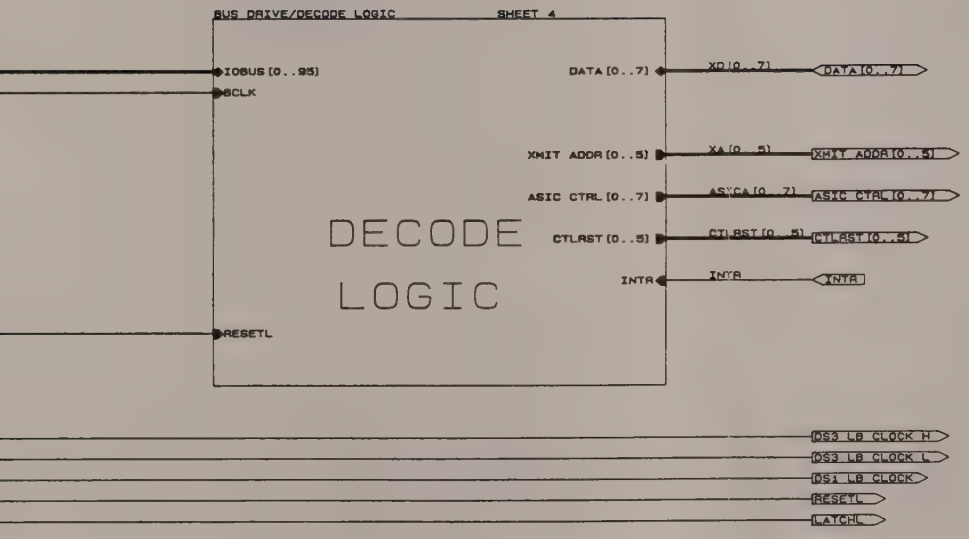

/*$INCRC=0x4E09*/

SCIENTIFIC-ATLANTA, INC.
INSTRUMENTATION DIVISION
4386 SHACKLEFORD RD
NORCROSS, GA 30093

Title
TRANSMIT CARD: BUS INTERFACE INTERCONNECT

Size	Document Number	REV
C	327888	C

Date: July 6, 1989 Sheet 2 of 10

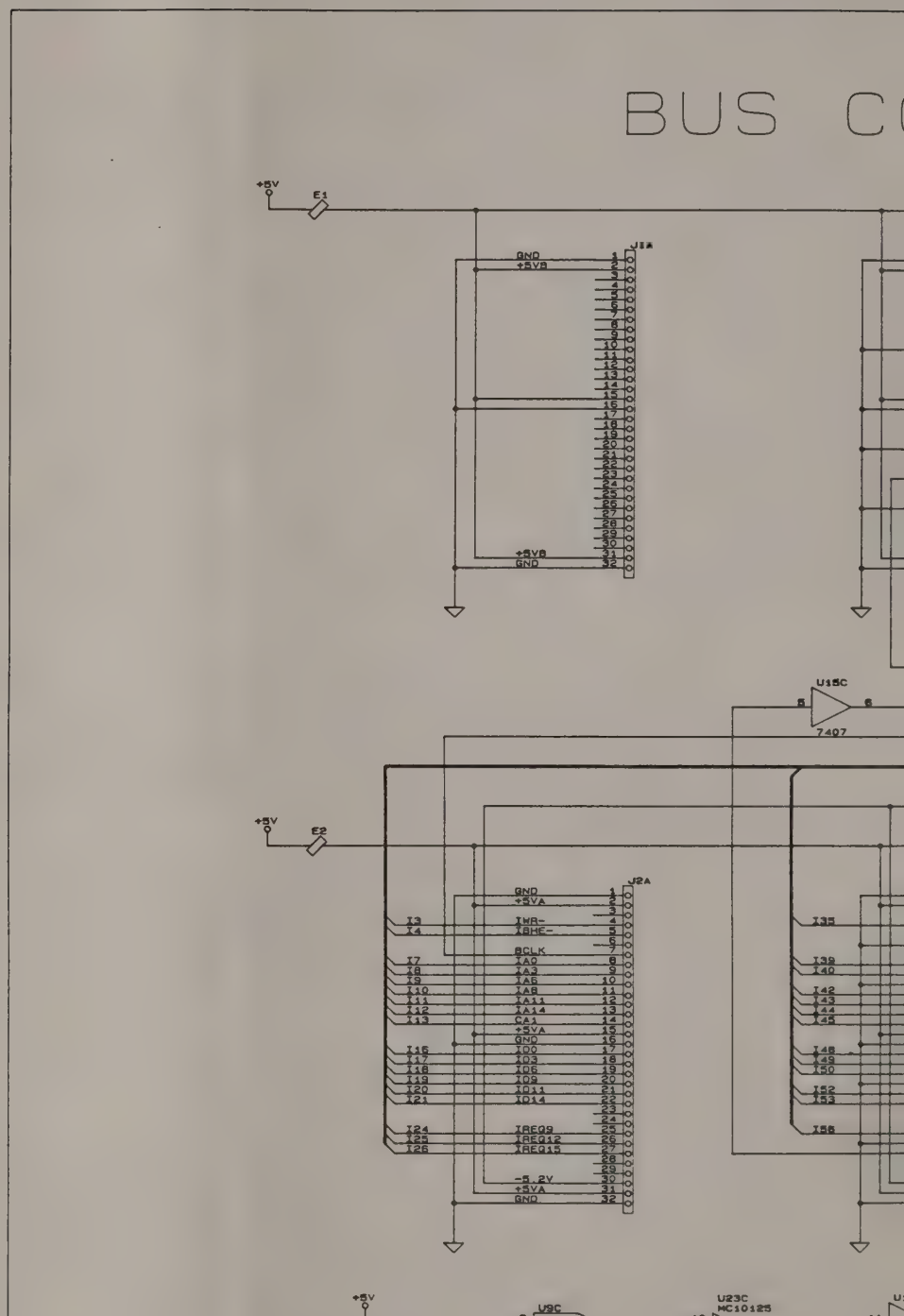
BUS C
+5V
E1
U1A
GND
+5V8
+5V8
GND
U15C
7407
+5V
E2
U2A
GND
+5VA
I3
I4
IWR-
IBHE-
BCLK
I7
I8
I9
I10
I11
I12
I13
IA0
IA2
IA8
IA10
IA11
IA14
CA1
+5VA
GND
I15
I17
I18
I19
I20
I21
ID0
ID3
ID6
ID9
ID11
ID14
I24
I25
I26
IREQ9
IREQ12
IREQ15
-5.2V
+5VA
GND
I35
I39
I40
I42
I43
I44
I45
I48
I49
I50
I52
I53
I56
+5V
C29
100
C28
0.1
C31
0.1
U9C
74HC08
U9D
74HC08
U23C
MC10125
U23D
MC10125

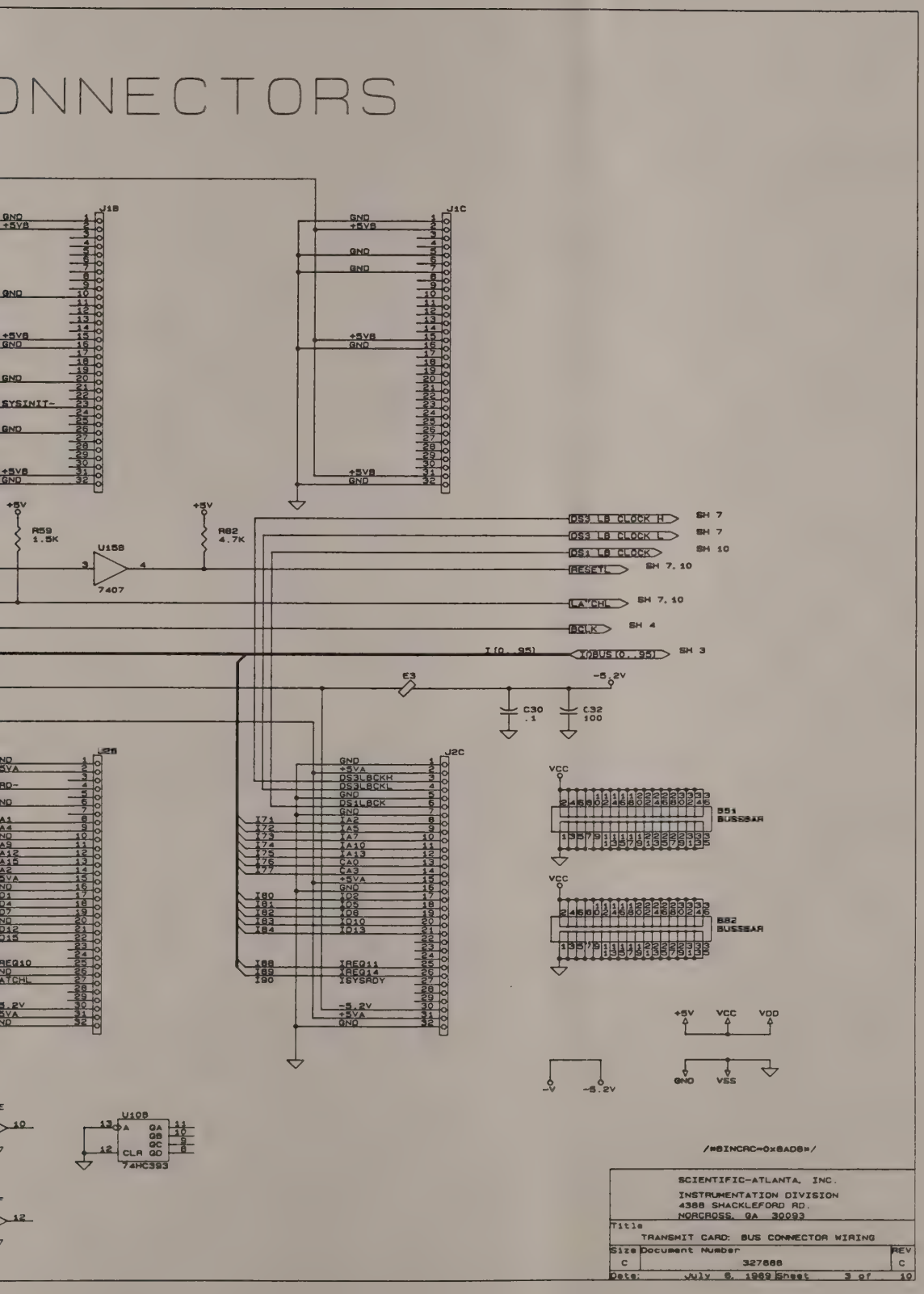
ONNECTORS
J1B
J1C
J2B
J2C
GND
+5VB
SYSINIT-
+5V
R59
1.5K
R82
4.7K
U15B
7407
DS3_LB_CLOCK_H
DS3_LB_CLOCK_L
DS1_LB_CLOCK
RESET
LA'CHL
BCLK
I[0..95]
I/OBUS[0..95]
SH 7
SH 10
SH 7, 10
SH 4
SH 3
E3
-5.2V
C30
.1
C32
100
DS3LBCKH
DS3LBCKL
DS1LBCK
IRQ11
IRQ14
ISYSRDY
VCC
351
BUSSSAR
352
BUSSEAR
+5V
VCC
VDD
GND
VSS
-V
-5.2V
U10B
74HC393
/*8INCRC=0x8AD8*/
SCIENTIFIC-ATLANTA, INC.
INSTRUMENTATION DIVISION
4386 SHACKLEFORD RD.
NORCROSS, GA 30093
Title
TRANSMIT CARD: BUS CONNECTOR WIRING
Size
C
Document Number
327688
REV
C
Date: July 6, 1989 Sheet 3 of 10

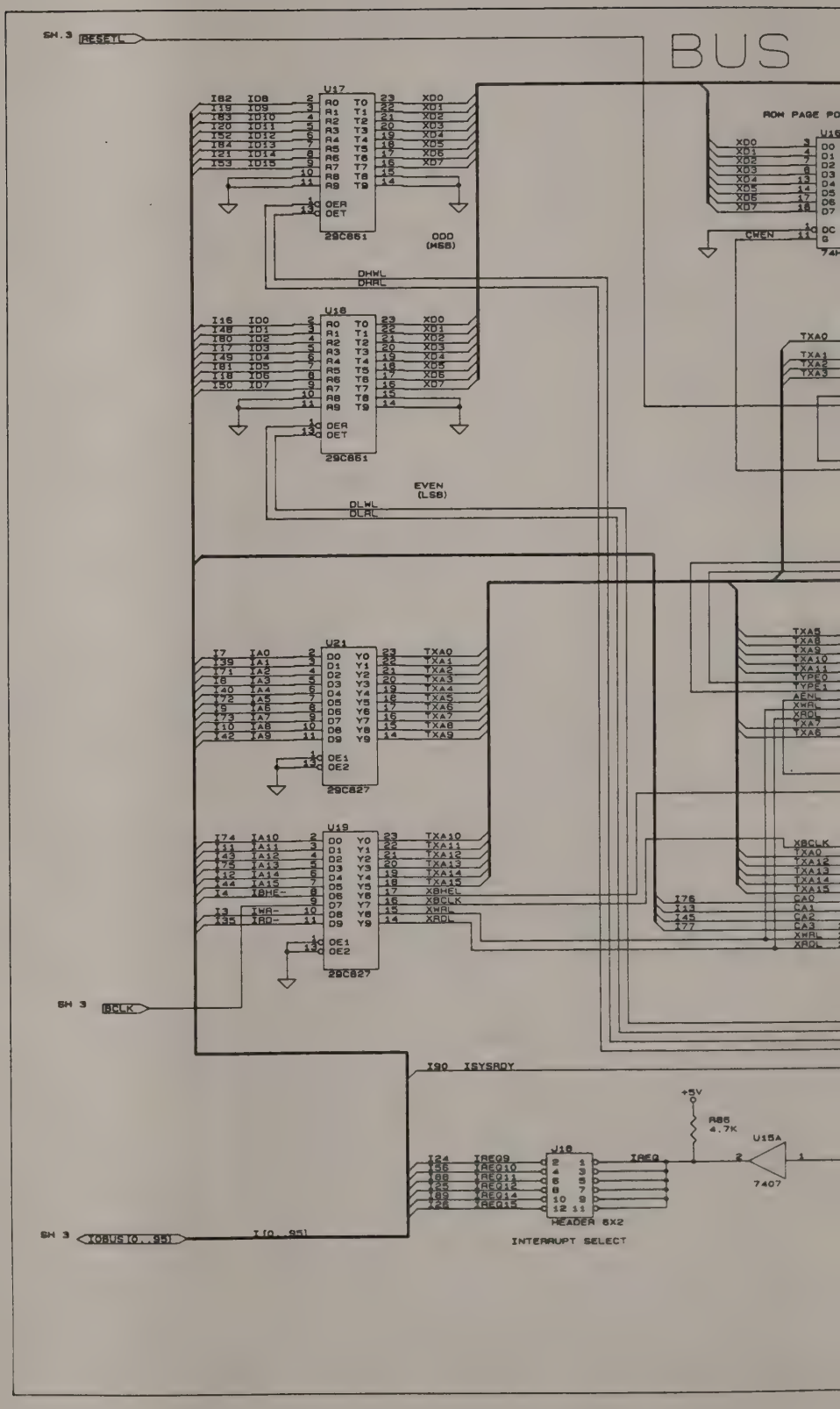
BUS
SH.3 RESETL
U17
I82 IO8
I19 IO9
I83 IO10
I20 IO11
I52 IO12
I84 IO13
I21 IO14
I53 IO15
A0 T0
A1 T1
A2 T2
A3 T3
A4 T4
A5 T5
A6 T6
A7 T7
A8 T8
A9 T9
OER
OET
29C861
XD0
XD1
XD2
XD3
XD4
XD5
XD6
XD7
ODD
(MSB)
DHWL
DHAL
U18
I16 IO0
I48 IO1
I80 IO2
I17 IO3
I49 IO4
I81 IO5
I18 IO6
I50 IO7
EVEN
(LSB)
DLWL
DLAL
U21
I7 IA0
I39 IA1
I71 IA2
I8 IA3
I40 IA4
I72 IA5
I9 IA6
I73 IA7
I10 IA8
I42 IA9
D0 Y0
D1 Y1
D2 Y2
D3 Y3
D4 Y4
D5 Y5
D6 Y6
D7 Y7
D8 Y8
D9 Y9
OE1
OE2
29C827
TXA0
TXA1
TXA2
TXA3
TXA4
TXA5
TXA6
TXA7
TXA8
TXA9
U19
I74 IA10
I11 IA11
I43 IA12
I75 IA13
I12 IA14
I44 IA15
I4 IBHE-
I3 IWR-
I35 IRD-
TXA10
TXA11
TXA12
TXA13
TXA14
TXA15
XBHEL
XBCLK
XWRL
XRDL
SH 3 BCLK
I90 ISYSRDY
+5V
R85
4.7K
U15A
7407
I24 IAEQ9
I56 IAEQ10
I88 IAEQ11
I25 IAEQ12
I89 IAEQ13
I57 IAEQ14
I26 IAEQ15
J18
HEADER 8X2
IAEQ
INTERRUPT SELECT
SH 3 XCBUS[0..9]
I[0..9]
ROM PAGE PO
CWEN
I76
I13
I45
I77
CA0
CA1
CA2
CA3
XWRL
XRDL

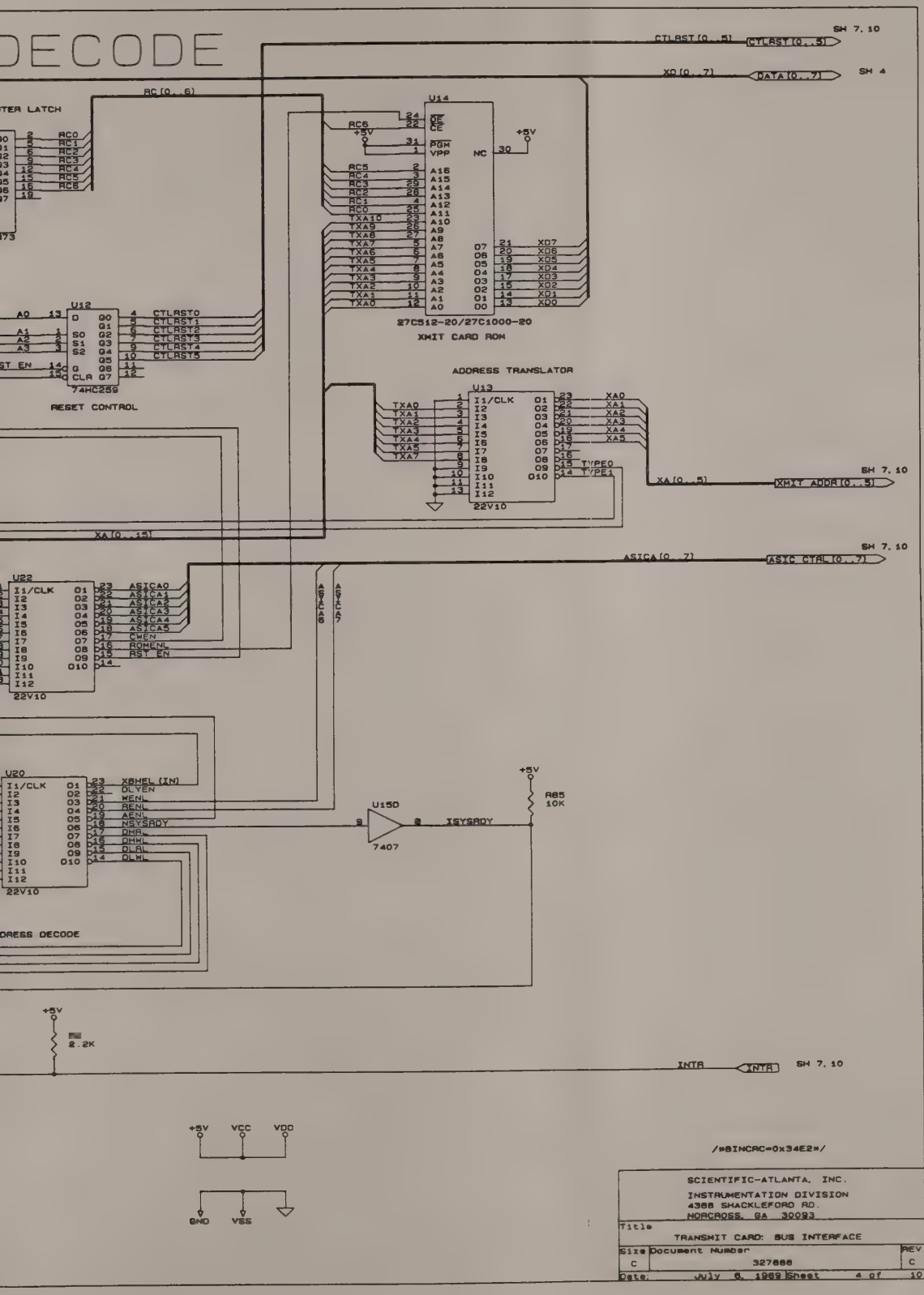
DECODE
RC[0..6]
U14
27C512-20/27C1000-20
XMIT CARD ROM
U12
74HC259
RESET CONTROL
ADDRESS TRANSLATOR
U13
22V10
CTLRST[0..5]
CTLRST[0..5]
SH 7.10
XD[0..7]
DATA[0..7]
SH 4
XA[0..5]
XMIT ADDR[0..5]
SH 7.10
XA[0..15]
ASIC[0..7]
ASIC CTRL[0..7]
SH 7.10
U22
U20
U15D
7407
R85
10K
2.2K
INTR
INTR
SH 7.10
/*$INCRC=0x34E2*/
SCIENTIFIC-ATLANTA, INC.
INSTRUMENTATION DIVISION
4386 SHACKLEFORD RD.
NORCROSS, GA 30093
TRANSMIT CARD: BUS INTERFACE
Size C
Document Number 327886
REV C
Date: July 6, 1989 Sheet 4 of 10

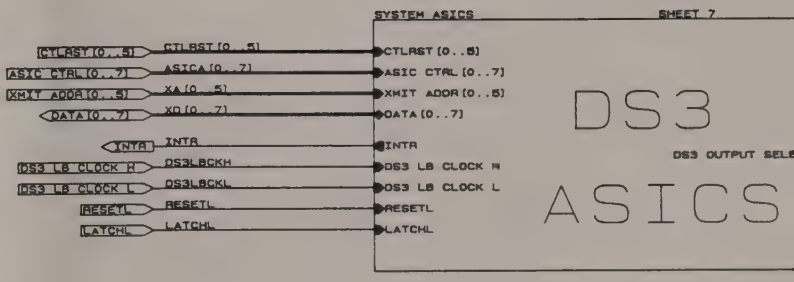
SYSTEM ASICS
SHEET 7
CTLRST[0..5]
CTLRST[0..5]
ASIC CTRL[0..7]
ASICA[0..7]
ASIC CTRL[0..7]
XMIT ADDR[0..5]
XA[0..5]
XMIT ADDR[0..5]
DATA[0..7]
XD[0..7]
DATA[0..7]
INTA
INTR
INTR
DS3 LB CLOCK H
DS3LBCKH
DS3 LB CLOCK H
DS3 LB CLOCK L
DS3LBCKL
DS3 LB CLOCK L
RESETL
RESETL
RESETL
LATCHL
LATCHL
LATCHL
DS3
DS3 OUTPUT SELE
ASICS

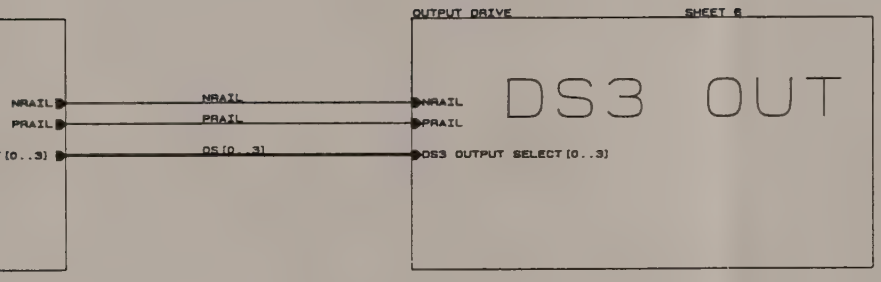

/*$INCRC=0x9AEB*/

SCIENTIFIC-ATLANTA, INC. INSTRUMENTATION DIVISION 4386 SHACKLEFORD RD. NORCROSS, GA 30093		
Title TRANSMIT CARD: DS3 BLOCK DIAGRAM		
Size C	Document Number 327[illegible]	REV C
Date: July 6, 1989	Sheet 5 of 10	

DS3 OUTPU

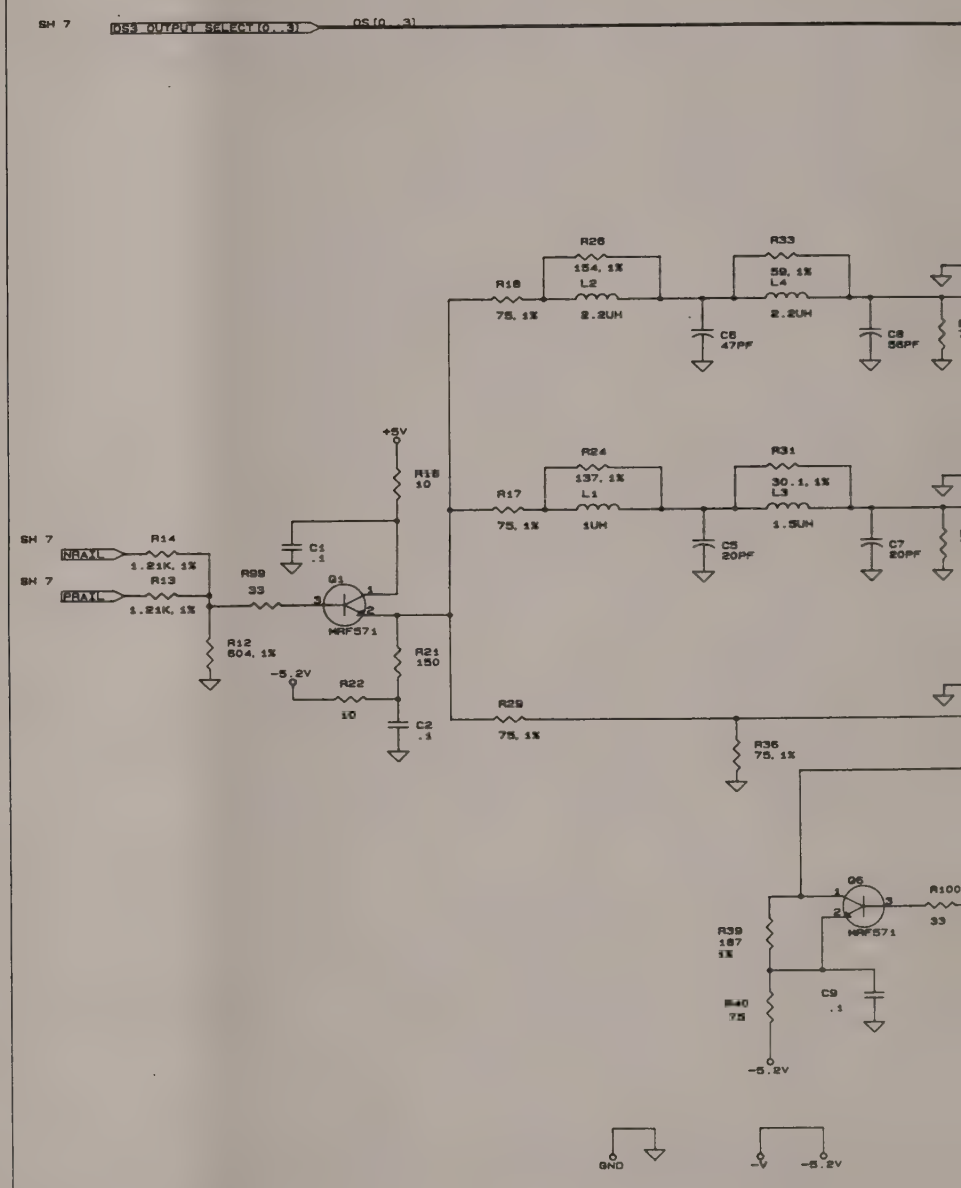

NOTE:

FOR DTA 9500 USE COAX SMB MALE PC MT 75 OHM.
FOR DAS 9000 USE COAX BNC FEM RT ANGLE PC MT.

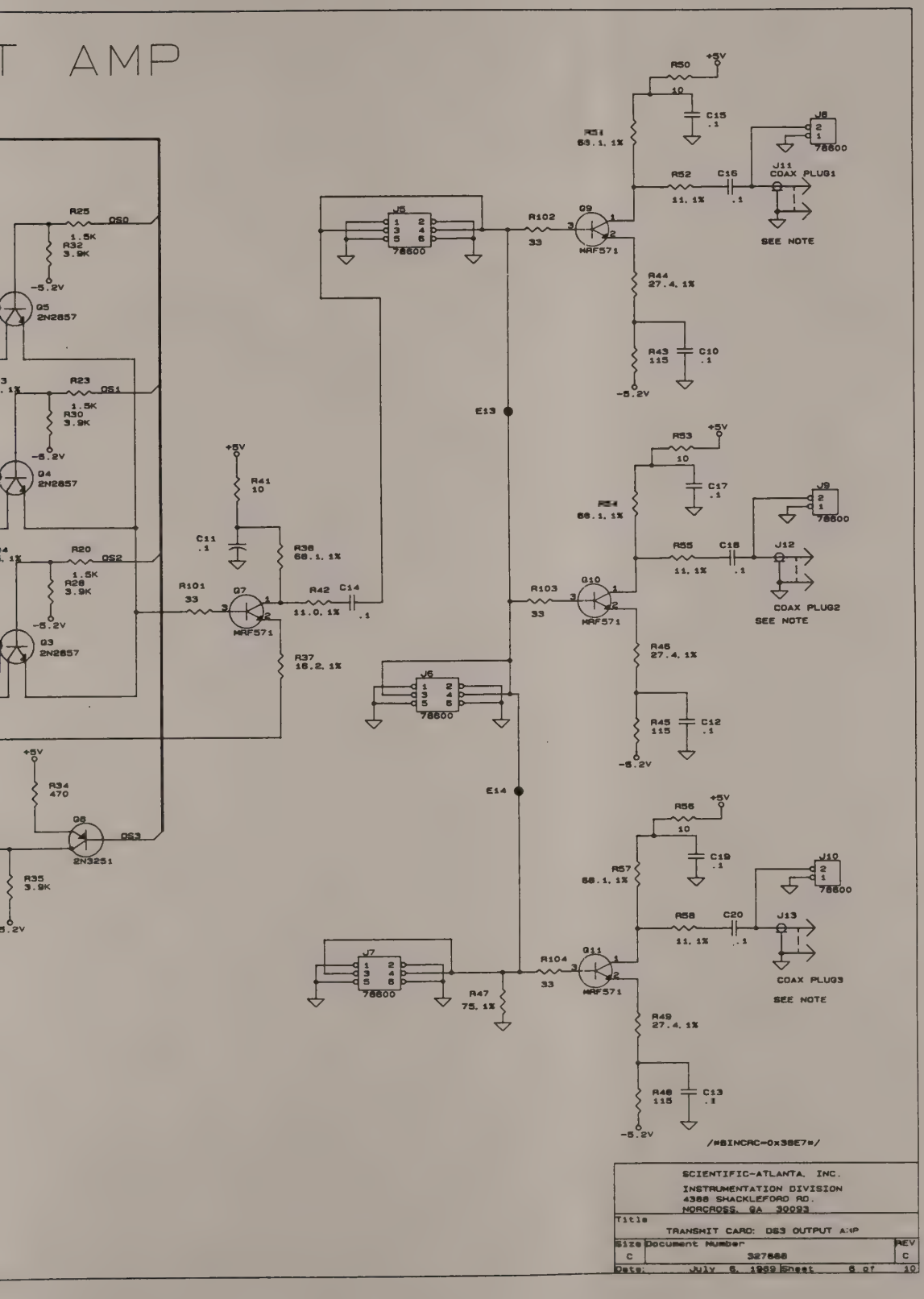
T AMP
R25
QS0
1.5K
R32
3.9K
-5.2V
Q5
2N2857
R23
QS1
1.5K
R30
3.9K
-5.2V
Q4
2N2857
R20
QS2
1.5K
R28
3.9K
-5.2V
Q3
2N2857
+5V
R34
470
Q8
QS3
2N3251
R35
3.9K
-5.2V
+5V
R41
10
C11
.1
R38
68.1, 1%
R101
33
Q7
MRF571
R42
11.0, 1%
C14
.1
R37
16.2, 1%
J5
78600
R102
33
Q9
MRF571
R50
+5V
10
C15
.1
R51
68.1, 1%
R52
11, 1%
C16
.1
J8
78600
J11
COAX PLUG1
SEE NOTE
R44
27.4, 1%
R43
115
C10
.1
-5.2V
E13
R53
+5V
10
C17
.1
R54
68.1, 1%
R55
11, 1%
C18
.1
J9
78600
J12
COAX PLUG2
SEE NOTE
J6
78600
R103
33
Q10
MRF571
R46
27.4, 1%
R45
115
C12
.1
-5.2V
E14
R56
+5V
10
C19
.1
R57
68.1, 1%
R58
11, 1%
C20
.1
J10
78600
J13
COAX PLUG3
SEE NOTE
J7
78600
R104
33
Q11
MRF571
R47
75, 1%
R49
27.4, 1%
R48
115
C13
.1
-5.2V
/*$INCAC=0x38E7*/
SCIENTIFIC-ATLANTA, INC.
INSTRUMENTATION DIVISION
4386 SHACKLEFORD RD.
NORCROSS, GA 30093
Title
TRANSMIT CARD: DS3 OUTPUT AMP
Size
C
Document Number
327686
REV
C
Date: July 6, 1989 Sheet 6 of 10

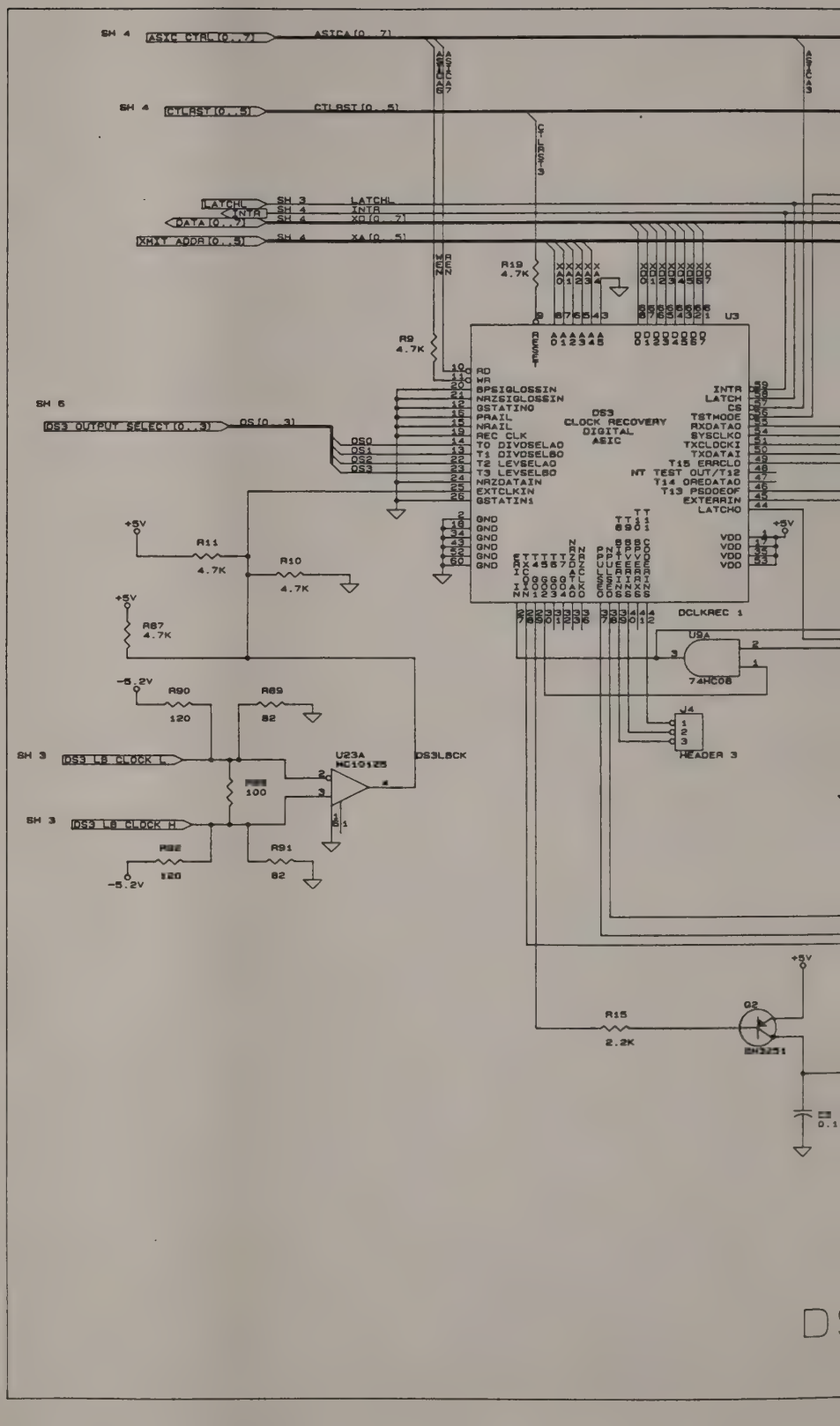
SH 4
ASIC CTRL [0..7]
ASICA[0..7]
SH 4
CTLAST[0..5]
CTLAST[0..5]
LATCHL
SH 3
LATCHL
INTR
SH 4
INTR
DATA[0..7]
SH 4
XD[0..7]
XHXY ADDR[0..5]
SH 4
XA[0..5]
R19
4.7K
R9
4.7K
U3
DS3
CLOCK RECOVERY
DIGITAL
ASIC
RD
WR
BPSIGLOSSIN
NRZSIGLOSSIN
GSTATIN0
PRAIL
NRAIL
REC CLK
T0 DIVOSELA0
T1 DIVOSELB0
T2 LEVSELA0
T3 LEVSELB0
NRZDATAIN
EXTCLKIN
GSTATIN1
INTR
LATCH
CS
TSTMODE
RXDATA0
SYSCLK0
TXCLOCKI
TXDATAI
T15 ERRCLO
NT TEST OUT/T12
T14 OREDATA0
T13 PSDOEOF
EXTERRIN
LATCH0
SH 6
DS3 OUTPUT SELECT[0..3]
DS[0..3]
DS0
DS1
DS2
DS3
GND
VDD
+5V
R11
4.7K
R10
4.7K
R87
4.7K
DCLKREC 1
U9A
74HC08
J4
HEADER 3
-5.2V
R90
120
R89
82
SH 3
DS3_LB_CLOCK_L
U23A
MC10125
DS3LBCK
R88
100
SH 3
DS3_LB_CLOCK_H
R92
120
R91
82
-5.2V
R15
2.2K
Q2
2N3251
0.1

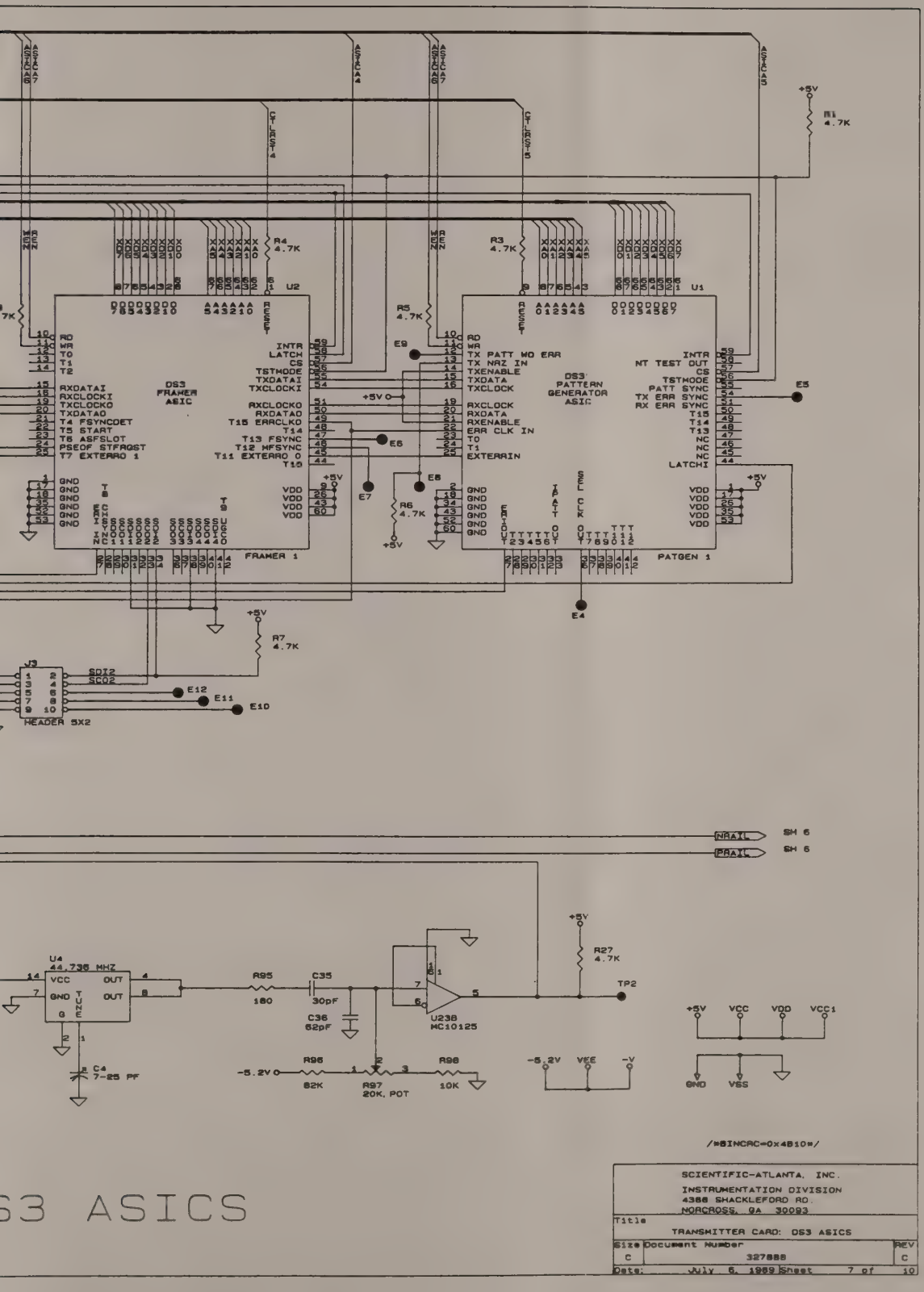
DS3 FRAMER ASIC
FRAMER 1
DS3 PATTERN GENERATOR ASIC
PATGEN 1
HEADER 5X2
U4 44.736 MHZ
U238 MC10125
R95 180
C35 30pF
C36 62pF
R96 82K
R97 20K, POT
R98 10K
R27 4.7K
TP2
C4 7-25 PF
NRAIL
PRAIL
SH 6
/*8INCRC=0x4B10*/
SCIENTIFIC-ATLANTA, INC.
INSTRUMENTATION DIVISION
4388 SHACKLEFORD RD.
NORCROSS, GA 30093
Title
TRANSMITTER CARD: DS3 ASICS
Size C
Document Number 327888
REV C
Date: July 6, 1989
Sheet 7 of 10
S3 ASICS

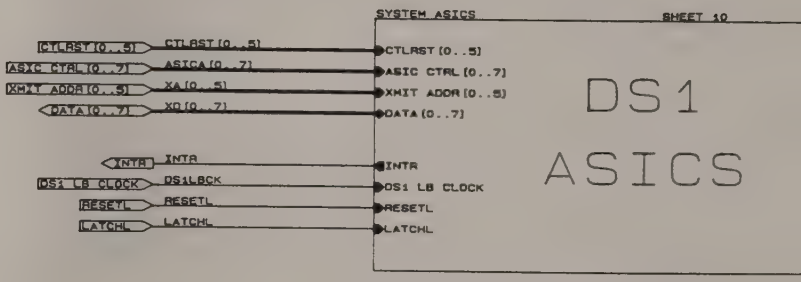
SYSTEM ASICS
SHEET 10
CTLRST[0..5]
ASIC CTRL[0..7]
XMIT ADDR[0..5]
DATA[0..7]
INTR
DS1 LB CLOCK
RESETL
LATCHL
DS1
ASICS

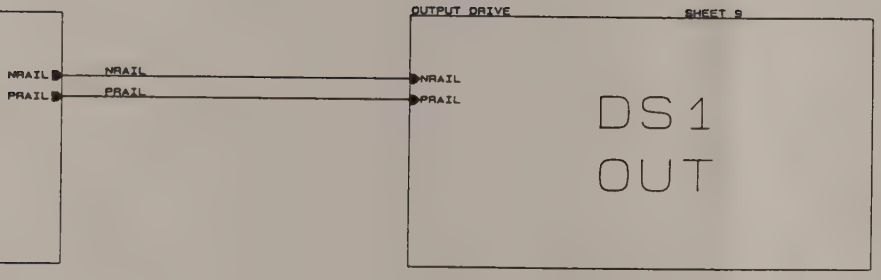

/*$INCRC=0x6842*/

SCIENTIFIC-ATLANTA, INC. INSTRUMENTATION DIVISION 4366 SHACKLEFORD RD. NORCROSS, GA 30093		
Title: TRANSMIT CARD: DS1 BLOCK DIAGRAM		
Size: C	Document Number: 327[illegible]	REV: C
Date: July 8, 1999	Sheet 8 of 10	

DS1 O

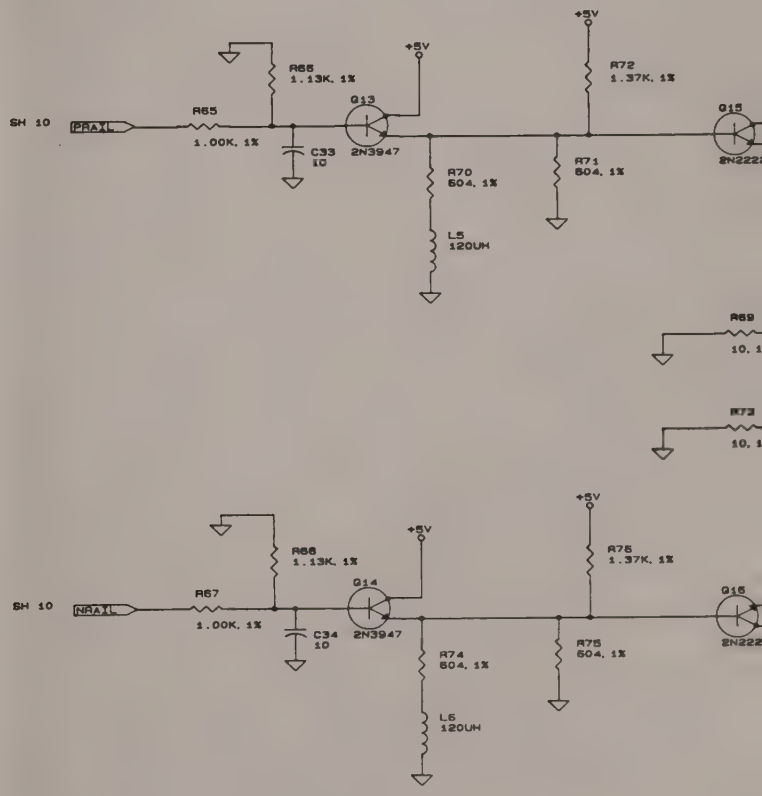

NOTE:

J14 USED ON DTA (9500) ONLY
J17 USED ON DAS (9000) ONLY

UTPUT AMP

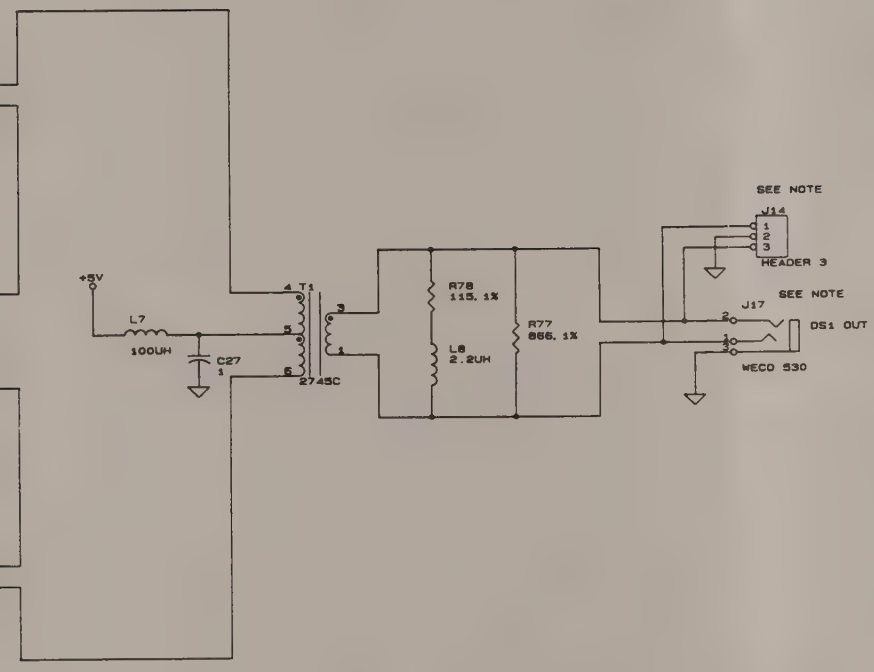

/*$INCRC=0x5554*/

SCIENTIFIC-ATLANTA, INC. INSTRUMENTATION DIVISION 4388 SHACKLEFORD RD. NORCROSS, GA 30093		
Title: TRANSMIT CARD: DS1 OUTPUT AMP		
Size: C	Document Number: 327888	REV: C
Date: July 6, 1989	Sheet 9 of 10	

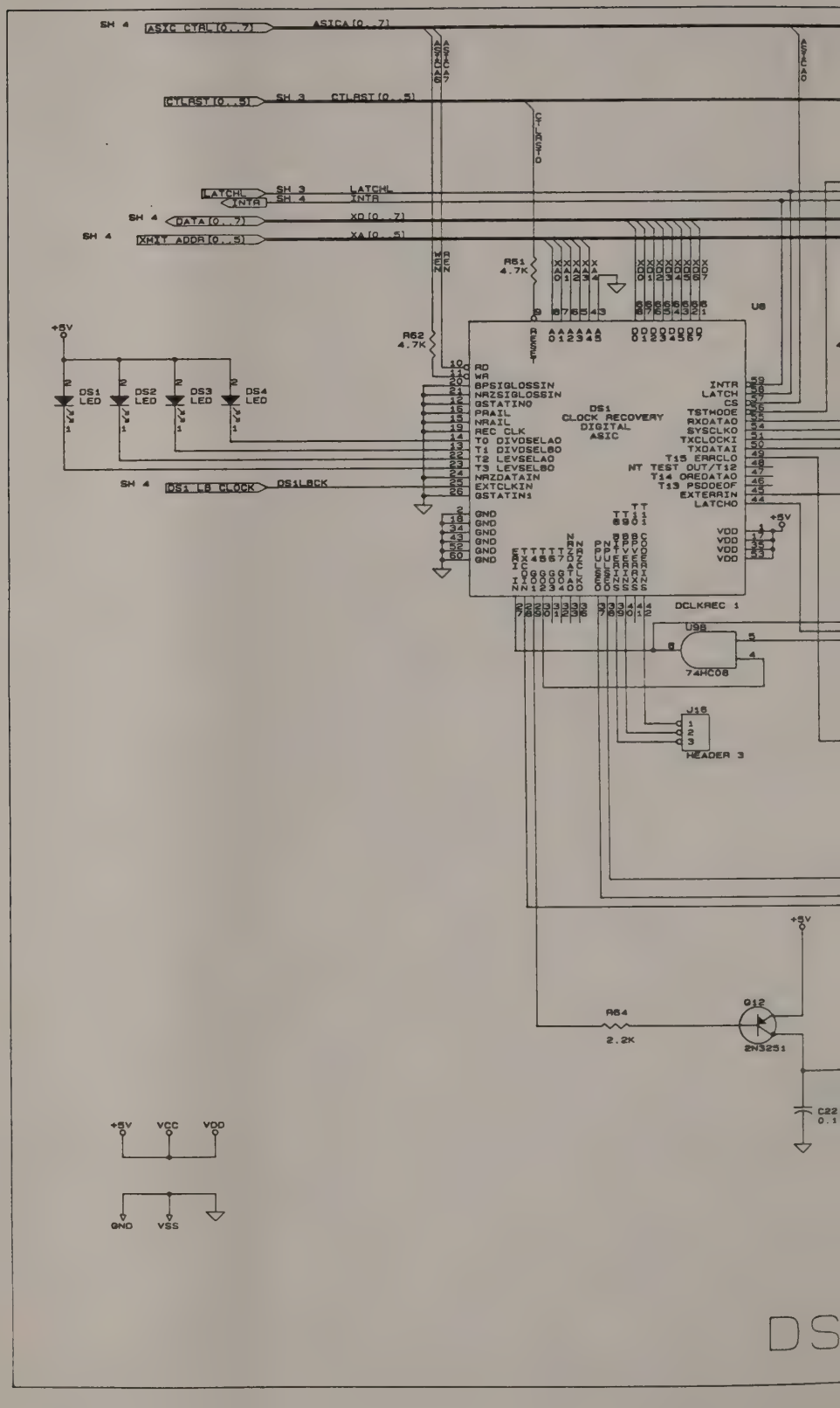
SH 4
ASIC CTRL[0..7]
ASICA[0..7]
CYLRST[0..5]
SH 3
CTLRST[0..5]
LATCHL
SH 3
SH 4
INTA
DATA[0..7]
XD[0..7]
XMIT ADDR[0..5]
XA[0..5]
R61
4.7K
R62
4.7K
+5V
DS1
LED
DS2
LED
DS3
LED
DS4
LED
DS1LBCK
DS1 LB CLOCK
U8
DS1
CLOCK RECOVERY
DIGITAL
ASIC
RD
WR
BPSIGLOSSIN
NRZSIGLOSSIN
GSTATIN0
PRAIL
NRAIL
REC CLK
T0 DIVOSELA0
T1 DIVOSELB0
T2 LEVSELA0
T3 LEVSELB0
NRZDATAIN
EXTCLKIN
GSTATIN1
INTR
LATCH
CS
TSTMODE
RXDATA0
SYSCLK0
TXCLOCKI
TXDATAI
T15 ERRCLO
NT TEST OUT/T12
T14 CREDATA0
T13 PSDOEOF
EXTERRIN
LATCH0
GND
VDD
DCLKREC 1
U9B
74HC08
J10
HEADER 3
R64
2.2K
Q12
2N3251
C22
0.1
+5V
VCC
VDD
GND
VSS

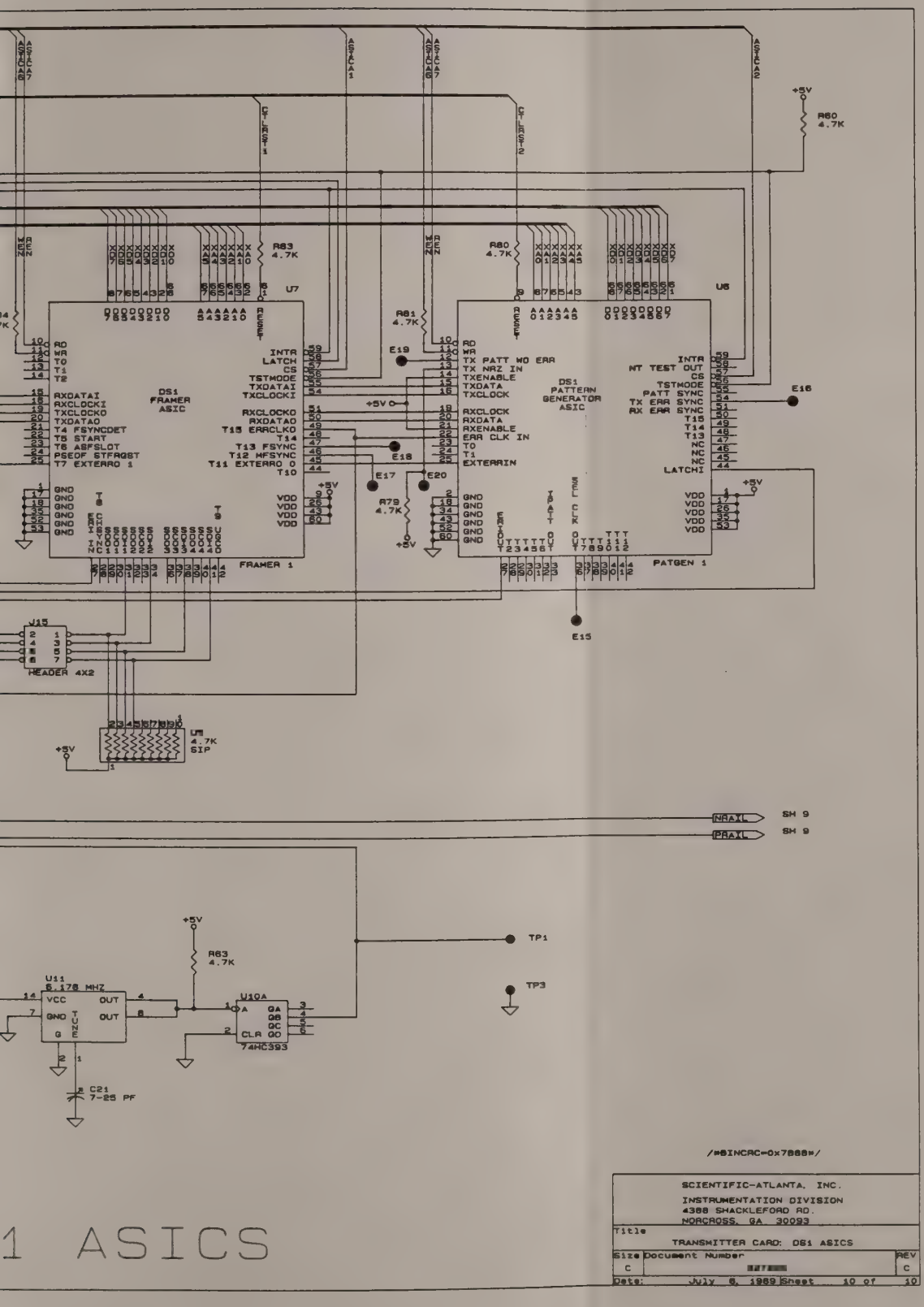
+5V
R80
4.7K
R83
4.7K
U7
DS1
FRAMER
ASIC
FRAMER 1
R81
4.7K
U6
DS1
PATTERN
GENERATOR
ASIC
PATGEN 1
E19
E18
E17
E20
E16
E15
R79
4.7K
U15
HEADER 4X2
U8
4.7K
SIP
NRAXL
PRAXL
SH 9
SH 9
TP1
TP3
R63
4.7K
U11
6.176 MHZ
U10A
74HC393
C21
7-25 PF
/*$INCAC=0x7888*/
SCIENTIFIC-ATLANTA, INC.
INSTRUMENTATION DIVISION
4368 SHACKLEFORD RD.
NORCROSS, GA 30093
Title
TRANSMITTER CARD: DS1 ASICS
Size C
Document Number
REV C
Date: July 6, 1989 Sheet 10 of 10
1 ASICS

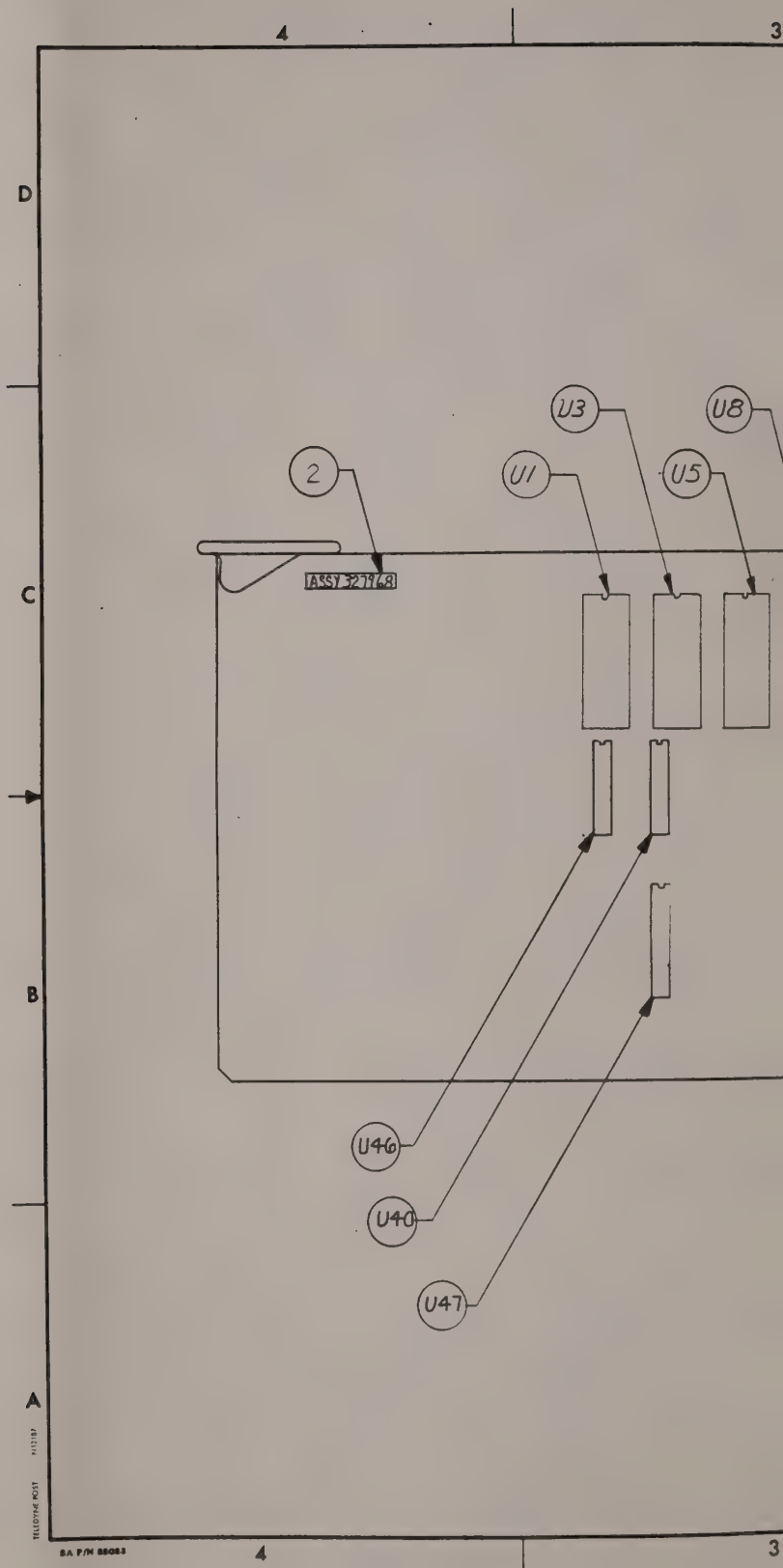
4
3
D
C
B
A
U3
U8
2
U1
U5
ASSY 327168
U46
U40
U47
TELEDYNE POST
SA P/N 88083
4
3

APPLICATION		
QTY REQD	NEXT ASSY	USED ON
1	327960	AT9500
1	327965	AT9500

REVISIONS				
ZONE	REV	DESCRIPTION	DATE	APPROVED
	A	INITIAL RELEASE ECO 10486	3/16/89	
	B	ECO 10627, ECO 10629	[illegible]	
	C	ECO 10736 SHEET 2 ADDED	8/31/89	
	D	ECO 10871-872	11/14/89	
	E	ECO 10906	1/22/90	
	F	ECO 11087	7/10/90	
	G	ECO 12016	7/17/90	

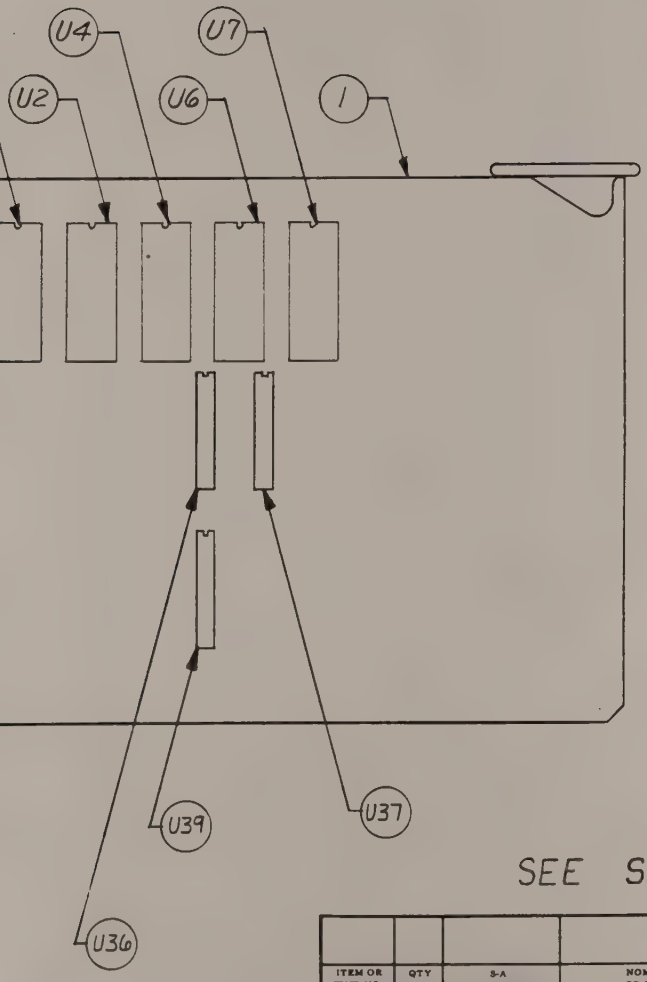

SEE SEPARATE PARTS LIST

ITEM OR FIND NO.	QTY REQD	S-A STOCK NO	NOMENCLATURE OR DESCRIPTION	MATL SPEC AND SIZE OR COMPONENT VALUE	IDENTIFYING OR PART NO	FSCM NO

PARTS LIST

UNLESS OTHERWISE SPECIFIED ALL CAPACITORS ARE IN MICRO-FARADS AND ALL RESISTORS ARE IN OHMS ±10% AND 1/4 WATT

LAST REFERENCE DESIGNATION USED

C	CR	J	K
Q	R	S	U

ALL DIMENSIONS ARE IN INCHES UNLESS OTHERWISE SPECIFIED

TOLERANCES
2 PLACE DECIMAL ± .005
3 PLACE DECIMAL ± .02
1 PLACE DECIMAL ± 1

FRACTIONS ± ANGLES ±0° 30'

MAX SURFACE ROUGHNESS ALL MACHINED SURFACES EXCEPT AS NOTED 125 √

BREAK SHARP EDGES AND CORNERS .010 MAX

FINISH NONE

CONTRACT NO.

DWN	Ted Bot	11-28-89
ENGR	[illegible]	11-[illegible]-89
CHK	[illegible]	1-12-90
PROD	[illegible]	2/15/90
APVD	[illegible]	
APVD		

Scientific-Atlanta 3845 Pleasantdale Road Atlanta, Georgia 30340

ASSEMBLY PWB RTC DTL

SIZE	FSCM NO	DWG NO	REV
C	10110	327968	G

SCALE 1/1 SHEET 1 OF 2

DWG NO 327968 REV G

EPROM AND PAL CHART

	ECO NO. 10736	ECO NO 10871-872	EC
TOP ASSY - 327968	327968C	327968D	
SUB-ASSY - 327887	→	→	→
PWB - 307261A	→	→	→
U36 - 308041 U36 8732	→	→	→
U37 - 307270 U37 D058	→	U37 - 457021 U37 D897	→
U39 - 309118 U39 71EA	→	→	→
U40 - 309119 U40 8569	U40 - 309669 U40 8609	→	→
U46 - 309115 U46 34D0	→	→	→
U47 - 309120 U47 85FD	U47 - 309670 U47 8601	→	U4

2 1

APPLICATION		
QTY REQD	NEXT ASSY	USED ON
1	327960	AT9500
1	327965	AT9500

REVISIONS				
ZONE	REV	DESCRIPTION	DATE	APPROVED
	–	SEE SHEET 1 FOR REV		

D

NO. 10906	ECO NO. 11087	ECO NO.	ECO NO.
327968E	327968F		
→	→		
→	→		
→	→		
→	→		
→	→		
→	→		
→	→		
7 – 457046 U47 8579	U47 – 459040 U47 717C		

C

ITEM OR FIND NO	QTY REQD	S-A STOCK NO	NOMENCLATURE OR DESCRIPTION	MATL SPEC AND SIZE OR COMPONENT VALUE	IDENTIFY NO OR PART	FSCM NO

PARTS LIST

A

Scientific-Atlanta 3845 Pleasantdale Road Atlanta, Georgia 30340

ASSEMBLY PWB - RTC DTA

SIZE	FSCM NO	DWG NO	REV
C	10110	327968	G

SCALE NONE SHEET 2

2 1

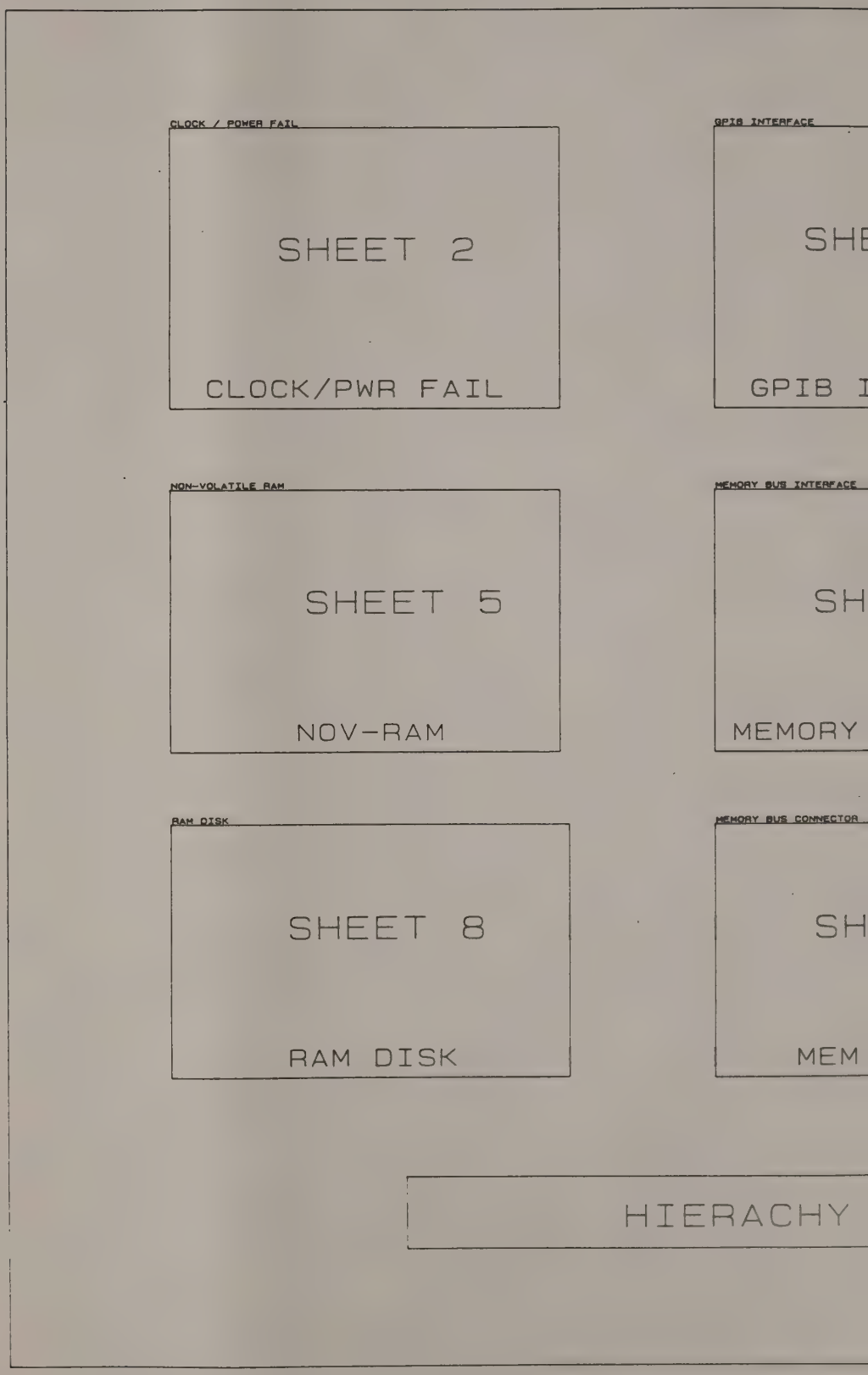
CLOCK / POWER FAIL
SHEET 2
CLOCK/PWR FAIL
GPIB INTERFACE
SHE
GPIB I
NON-VOLATILE RAM
SHEET 5
NOV-RAM
MEMORY BUS INTERFACE
SH
MEMORY
RAM DISK
SHEET 8
RAM DISK
MEMORY BUS CONNECTOR
SH
MEM
HIERACHY

APPLICATION			REVISIONS				
QTY REQD	NEXT ASSY	USED ON	ZONE	REV	DESCRIPTION	DATE	APVD
0	327968	AT9500					
0	327968	AT9500 (PORT)					
0	306216	AT9000					

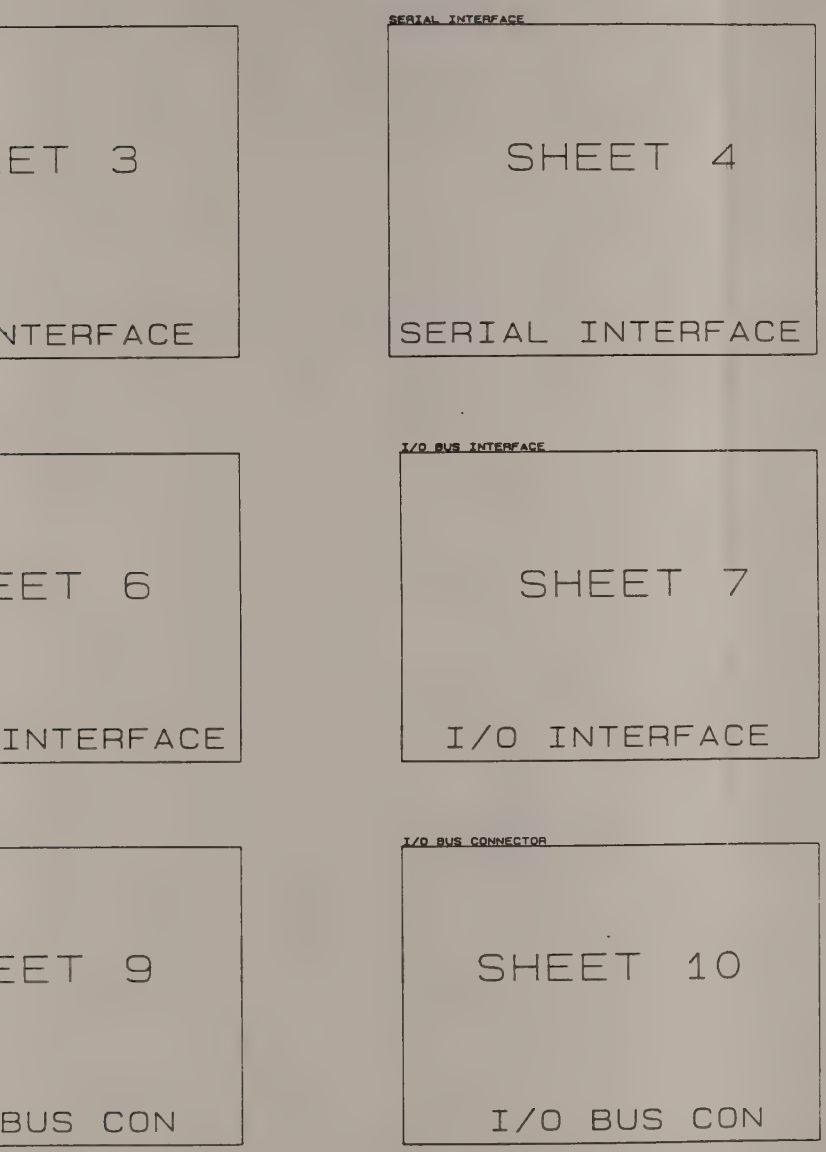

/*BINCRC=0x54FF*/

DWN	N. KAYTON	6-1-89
ENGR	Robert E Hyer	6/16/89
CHK	Janice Cokie	6-19-89
PROD	James Forland	6-12
APVD	B. Sprinkle	
APVD		

Scientific Atlanta
4388 SHACKLEFORD RD
NORCROSS, GA 30092

Title
REAL TIME CLOCK - BLOCK DIAGRAM

Size	Document Number	REV
C	A327885	B

Date: June 16, 1989 Sheet 1 of 10

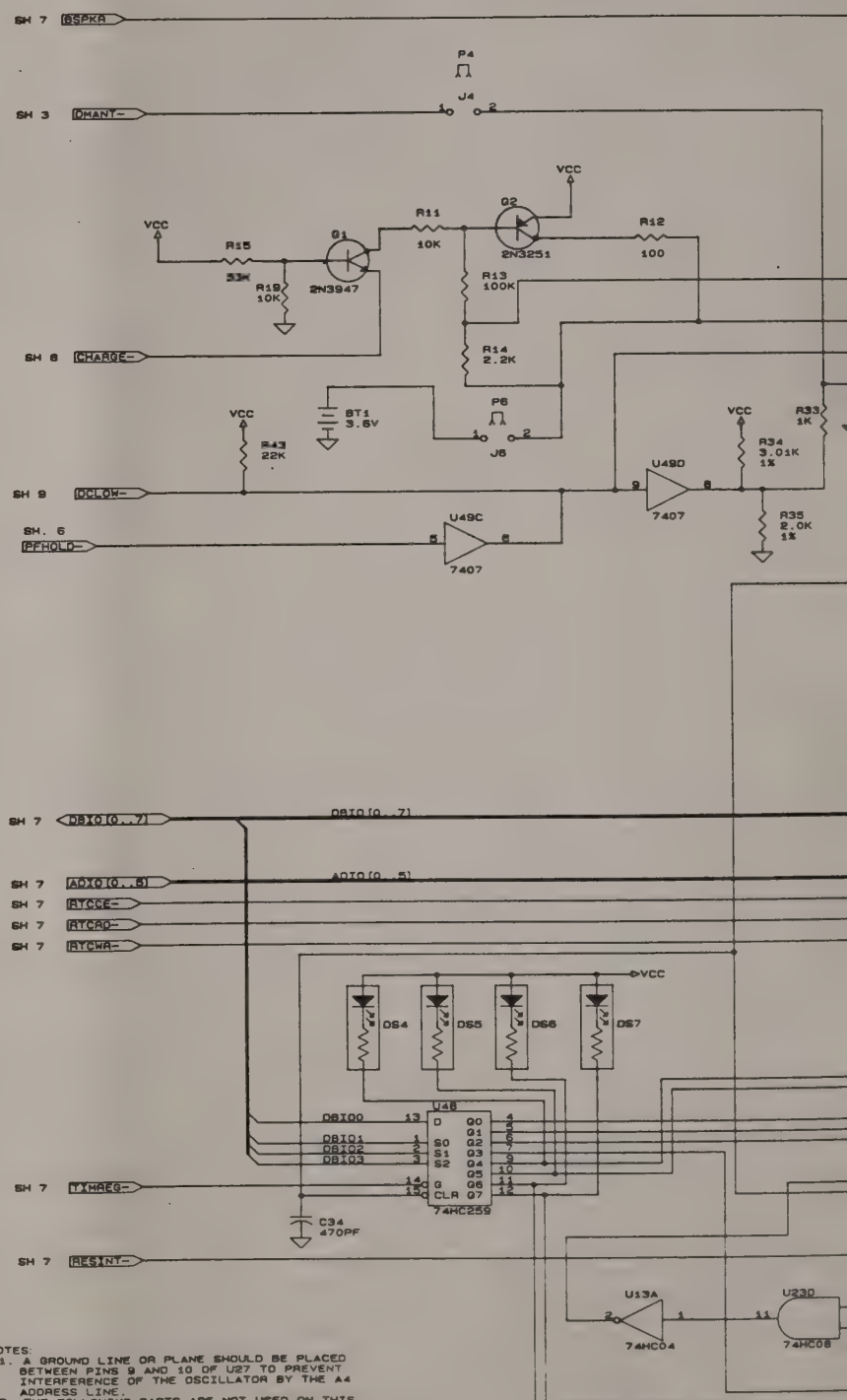

NOTES:
1. A GROUND LINE OR PLANE SHOULD BE PLACED BETWEEN PINS 9 AND 10 OF U27 TO PREVENT INTERFERENCE OF THE OSCILLATOR BY THE A4 ADDRESS LINE.
2. THE FOLLOWING PARTS ARE NOT USED ON THIS BOARD: J5

⚠ AT8500 (DTA) ONLY.

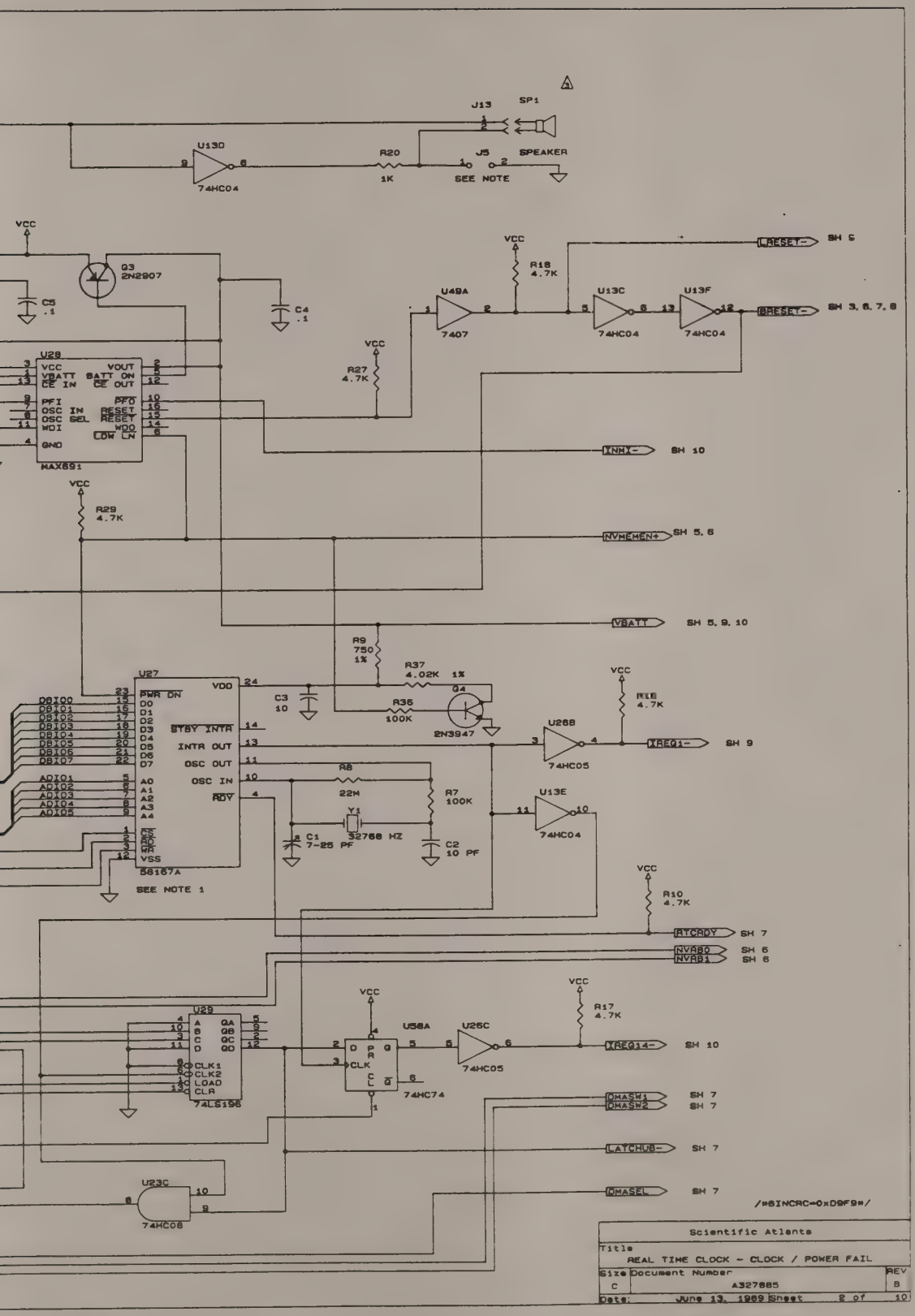
J13
SP1
U13D
74HC04
R20
1K
J5
SPEAKER
SEE NOTE
VCC
Q3
2N2907
C5
.1
C4
.1
U49A
7407
R18
4.7K
U13C
74HC04
U13F
74HC04
LRESET-
SH 5
BRESET-
SH 3, 6, 7, 8
R27
4.7K
U28
MAX691
XNMI-
SH 10
R29
4.7K
NVMEMEN+
SH 5, 6
VBATT
SH 5, 9, 10
R9
750
1%
R37
4.02K 1%
C3
10
R36
100K
Q4
2N3947
RLE
4.7K
U26B
74HC05
XREQ1-
SH 9
U27
58167A
SEE NOTE 1
R8
22M
R7
100K
Y1
32768 HZ
C1
7-25 PF
C2
10 PF
U13E
74HC04
R10
4.7K
RTCRDY
SH 7
NVRB0
NVRB1
SH 6
U29
74LS156
U58A
U26C
74HC74
74HC05
R17
4.7K
XREQ14-
SH 10
DMASW1
DMASW2
SH 7
LATCHUB-
SH 7
DMASEL
SH 7
U23C
74HC08
/*BINCRC=0xD9F9*/
Scientific Atlanta
Title
REAL TIME CLOCK - CLOCK / POWER FAIL
Size
C
Document Number
A327885
REV
B
Date: June 13, 1989 Sheet 2 of 10

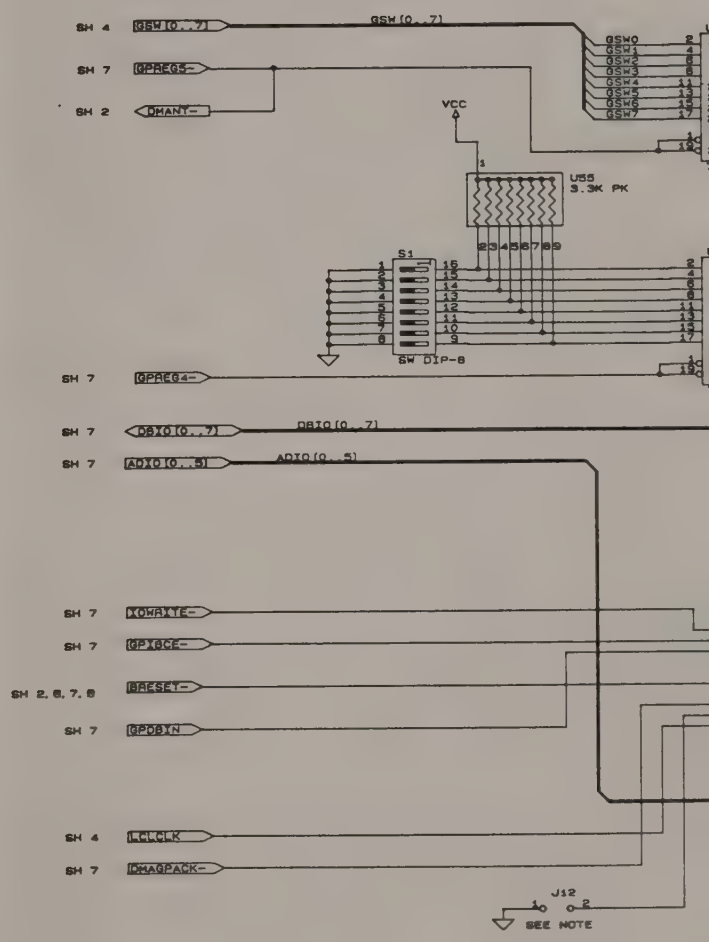

NOTE:
J12 NOT USED ON THIS BOARD.

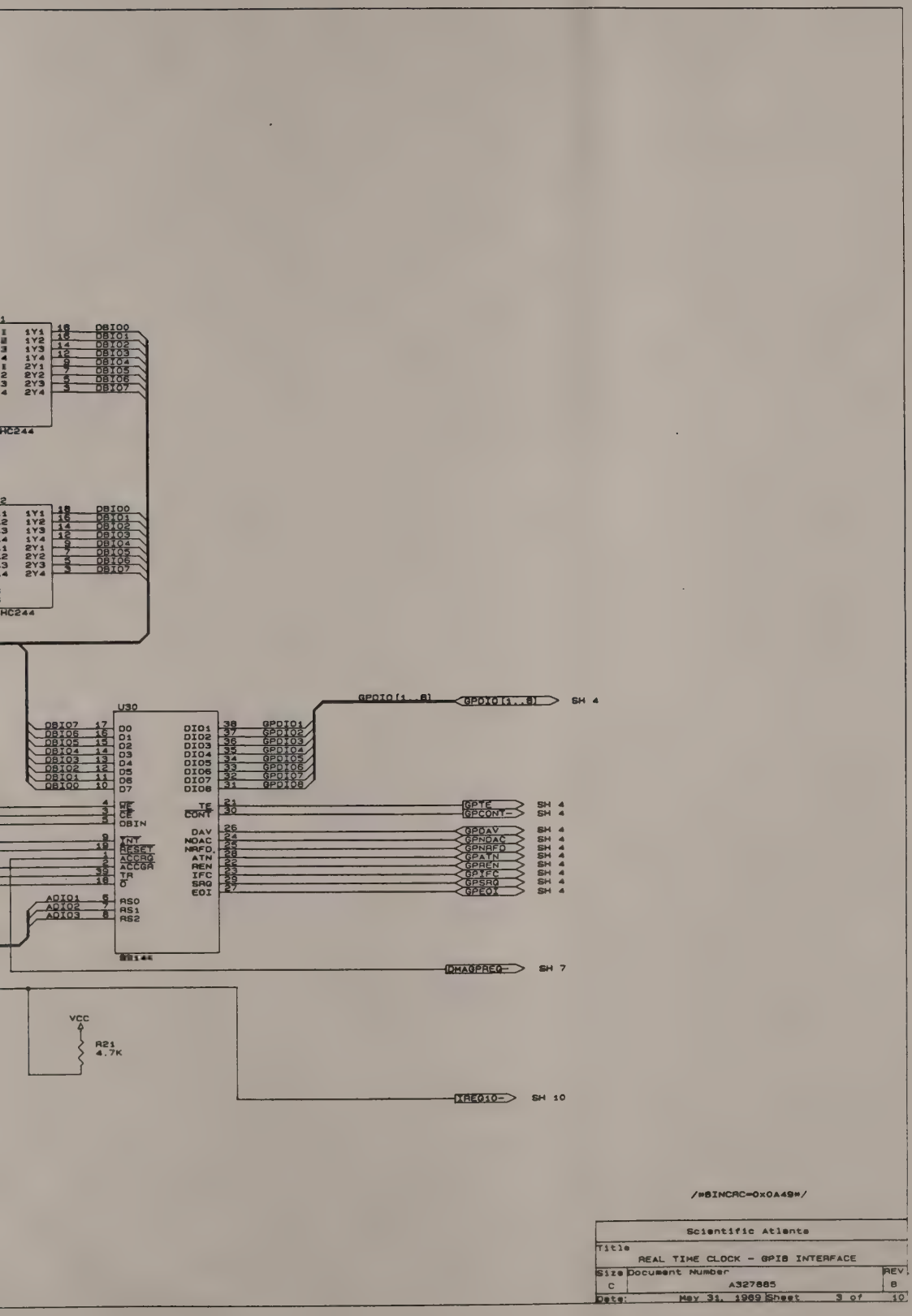
HC244
HC244
U30
DBIO7
DBIO6
DBIO5
DBIO4
DBIO3
DBIO2
DBIO1
DBIO0
D0
D1
D2
D3
D4
D5
D6
D7
DIO1
DIO2
DIO3
DIO4
DIO5
DIO6
DIO7
DIO8
GPDIO1
GPDIO2
GPDIO3
GPDIO4
GPDIO5
GPDIO6
GPDIO7
GPDIO8
GPDIO[1..8]
GPDIO[1..8]
SH 4
TE
CONT
OBIN
DAV
NDAC
NRFD
ATN
REN
IFC
SRQ
EOI
INT
RESET
ACCRQ
ACCGA
TR
D
RS0
RS1
RS2
ADIO1
ADIO2
ADIO3
GPTE
GPCONT-
GPDAV
GPNDAC
GPNRFD
GPATN
GPREN
GPIFC
GPSRQ
GPEOI
DMAGPREQ-
SH 7
VCC
R21
4.7K
MREQ10-
SH 10
/*$INCRC=0x0A49*/
Scientific Atlanta
Title
REAL TIME CLOCK - GPIB INTERFACE
Size
C
Document Number
A327885
REV.
B
Date:
May 31, 1989
Sheet
3 of
10

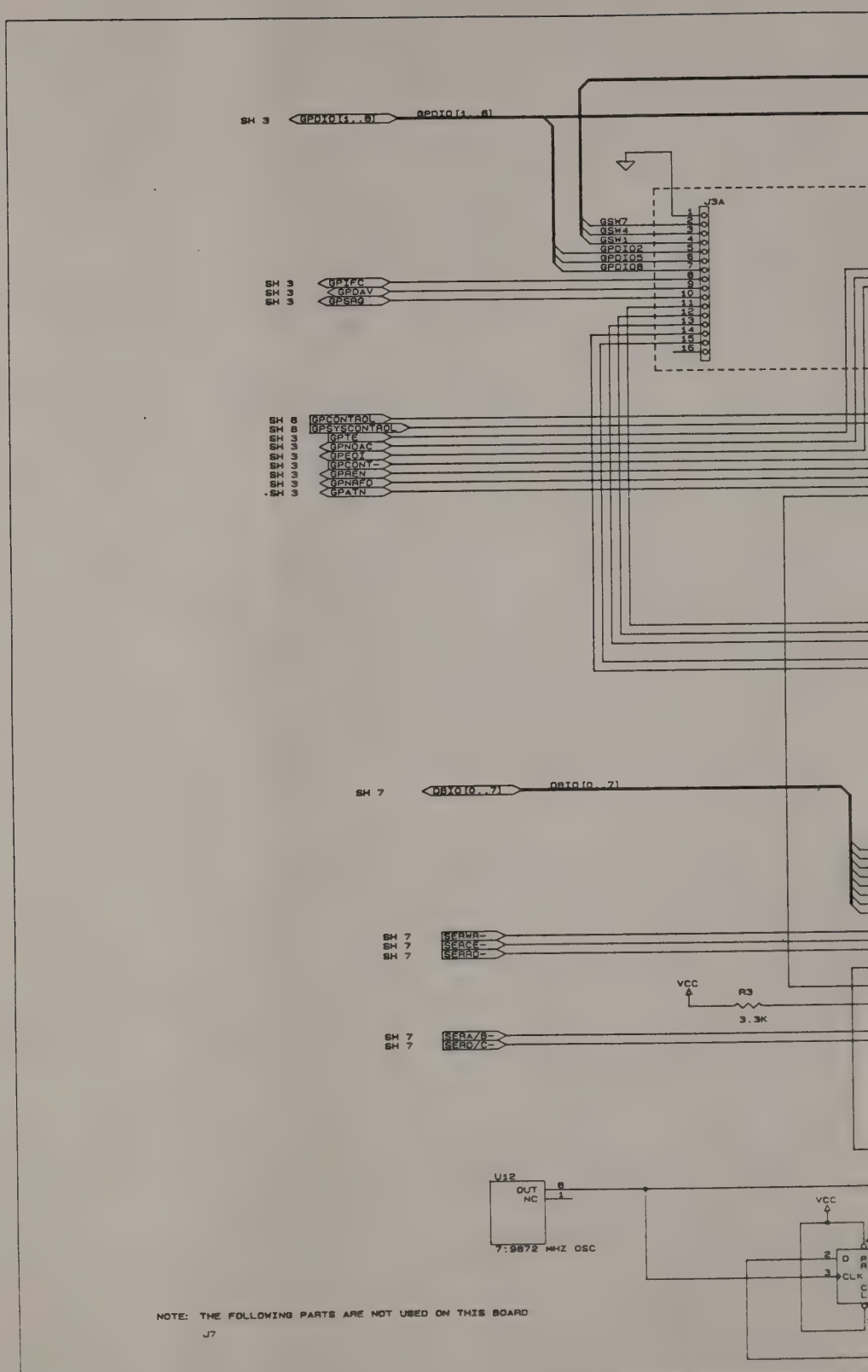
SH 3
GPDXOI[1..8]
GPDIO[1..8]
J3A
GSM7
GSM4
GSM1
GPDIO2
GPDIO5
GPDIO8
GPXFC
GPDAV
GPSRQ
GPCONTROL
GPSYSCONTROL
GPTE
GPNDAC
GPEOI
GPCONT-
GPREN
GPNRFD
GPATN
DBXOI[0..7]
DBIO[0..7]
SEAWR-
SEACE-
SEARD-
VCC
R3
3.3K
SEAA/B-
SEAD/C-
U12
OUT
NC
7:9872 MHZ OSC
NOTE: THE FOLLOWING PARTS ARE NOT USED ON THIS BOARD
J7

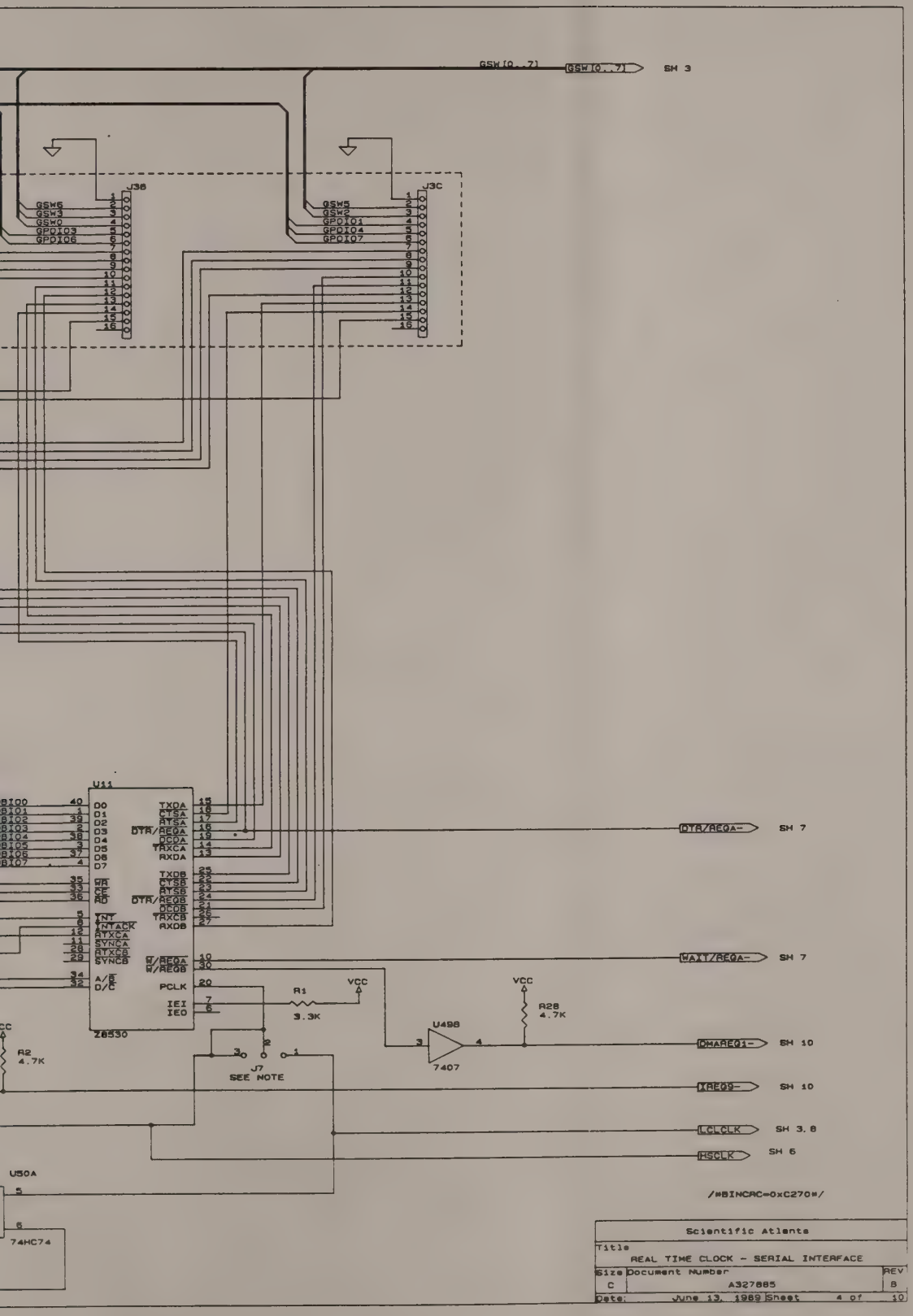
GSW[0..7]
GSW[0..7]
SH 3
J3B
J3C
GSW5
GSW3
GSW0
GPDIO3
GPDIO6
GSW5
GSW2
GPDIO1
GPDIO4
GPDIO7
U11
Z8530
DTR/REQA-
SH 7
WAIT/REQA-
SH 7
R1
3.3K
VCC
R28
4.7K
U49B
7407
DMAREQ1-
SH 10
XREQ0-
SH 10
LCLCLK
SH 3, 8
RSCLK
SH 6
R2
4.7K
J7
SEE NOTE
U50A
74HC74
/*BINCAC=0xC270*/
Scientific Atlanta
REAL TIME CLOCK - SERIAL INTERFACE
A327885
June 13, 1989
4 of 10

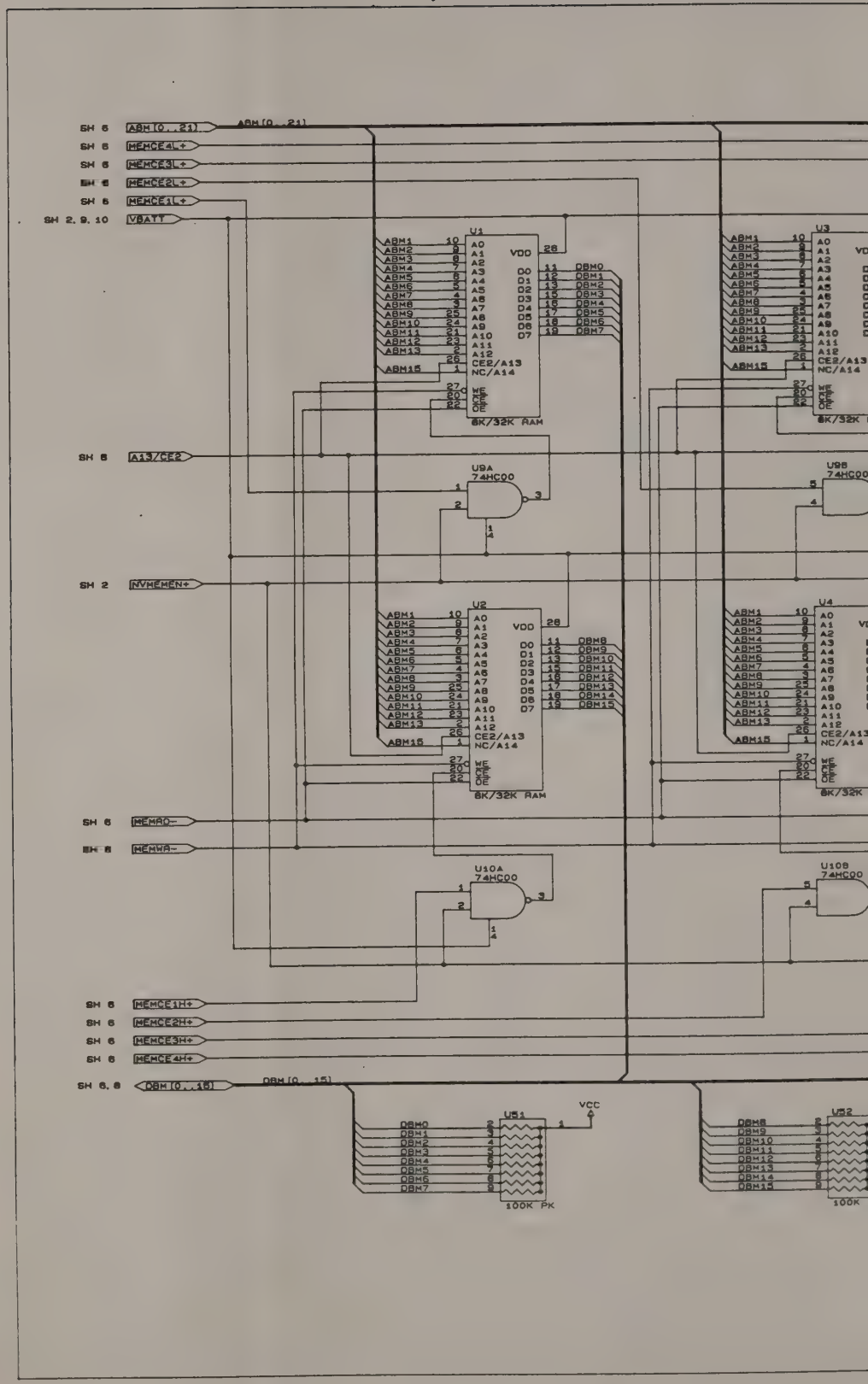
SH 6
ABM[0..21]
SH 6
MEMCE4L+
SH 6
MEMCE3L+
SH 6
MEMCE2L+
SH 6
MEMCE1L+
SH 2, 9, 10
VBATT
U1
ABM1
ABM2
ABM3
ABM4
ABM5
ABM6
ABM7
ABM8
ABM9
ABM10
ABM11
ABM12
ABM13
ABM15
A0
A1
A2
A3
A4
A5
A6
A7
A8
A9
A10
A11
A12
CE2/A13
NC/A14
VDD
D0
D1
D2
D3
D4
D5
D6
D7
DBM0
DBM1
DBM2
DBM3
DBM4
DBM5
DBM6
DBM7
WE
CE1
OE
8K/32K RAM
U3
8K/32K
SH 6
A13/CE2
U9A
74HC00
U9B
74HC00
SH 2
NVMEMEN+
U2
DBM8
DBM9
DBM10
DBM11
DBM12
DBM13
DBM14
DBM15
8K/32K RAM
U4
8K/32K
SH 6
MEMAD-
SH 6
MEMWR-
U10A
74HC00
U10B
74HC00
SH 6
MEMCE1H+
SH 6
MEMCE2H+
SH 6
MEMCE3H+
SH 6
MEMCE4H+
SH 6, 8
DBM[0..15]
U51
VCC
100K PK
U52
100K

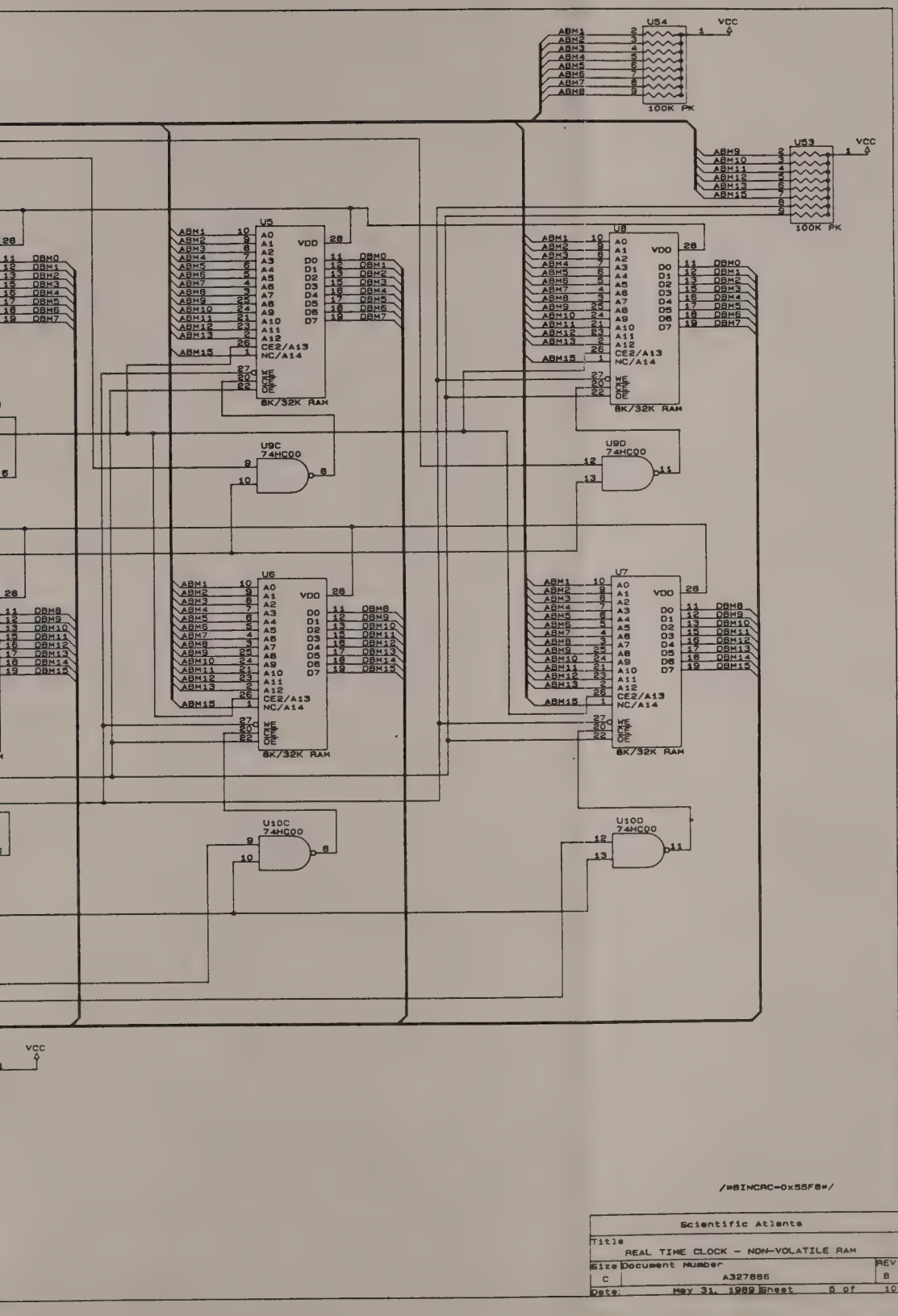
U54
VCC
100K PK
U53
VCC
100K PK
U5
U8
U6
U7
8K/32K RAM
U9C
74HC00
U9D
74HC00
U10C
74HC00
U10D
74HC00
VCC
/*$INCRC=0x55F8*/
Scientific Atlanta
Title
REAL TIME CLOCK - NON-VOLATILE RAM
Size C
Document Number A327885
REV B
Date: May 31, 1989
Sheet 6 of 10

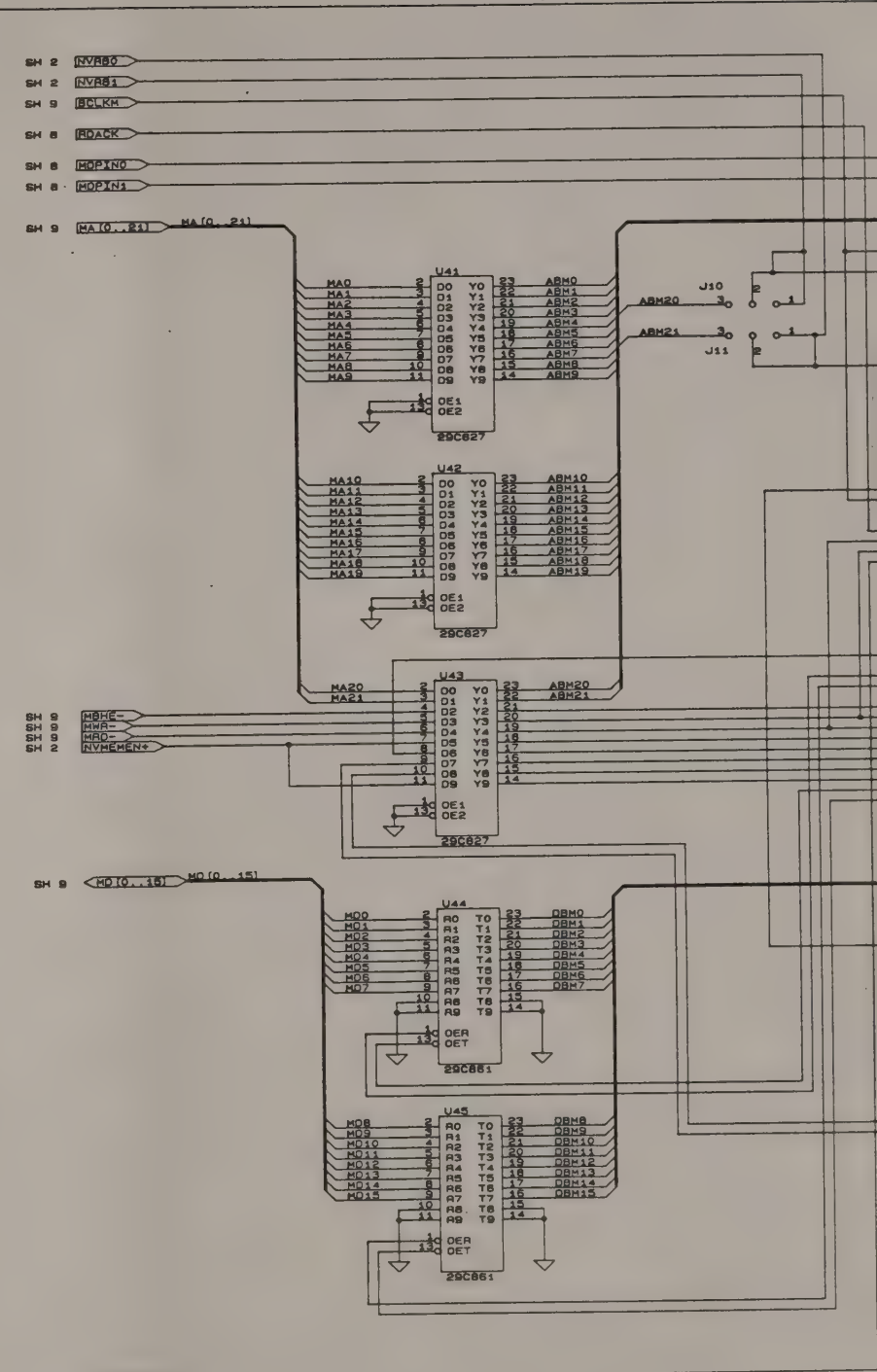

NOTE: THE FOLLOWING PARTS ARE NOT USED ON THIS BOARD

J10, J11

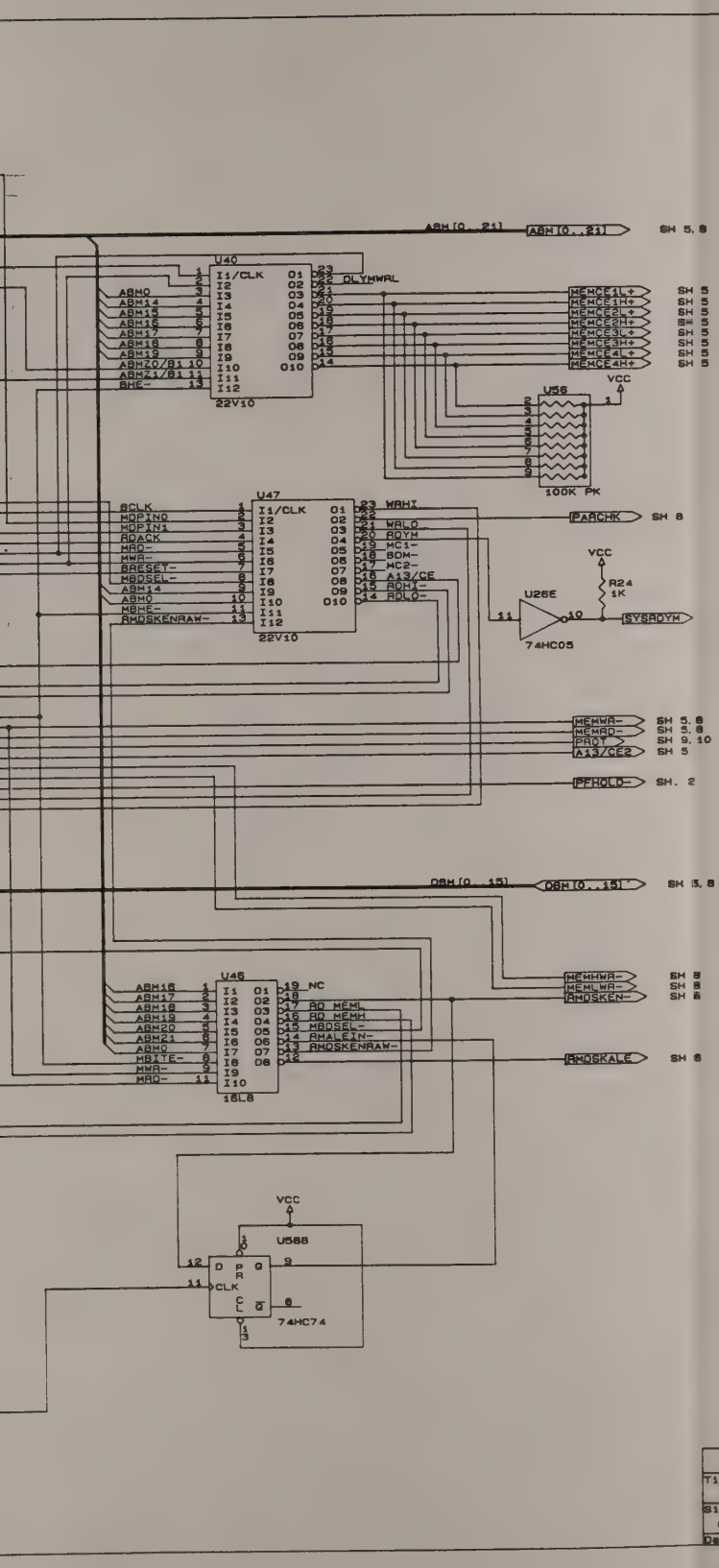

Scientific Atlanta		
Title: REAL TIME CLOCK - MEMORY BUS INTERFACE		
Size: C	Document Number: A327885	REV: B
Date: May 31, 1989	Sheet: 8 of 10	

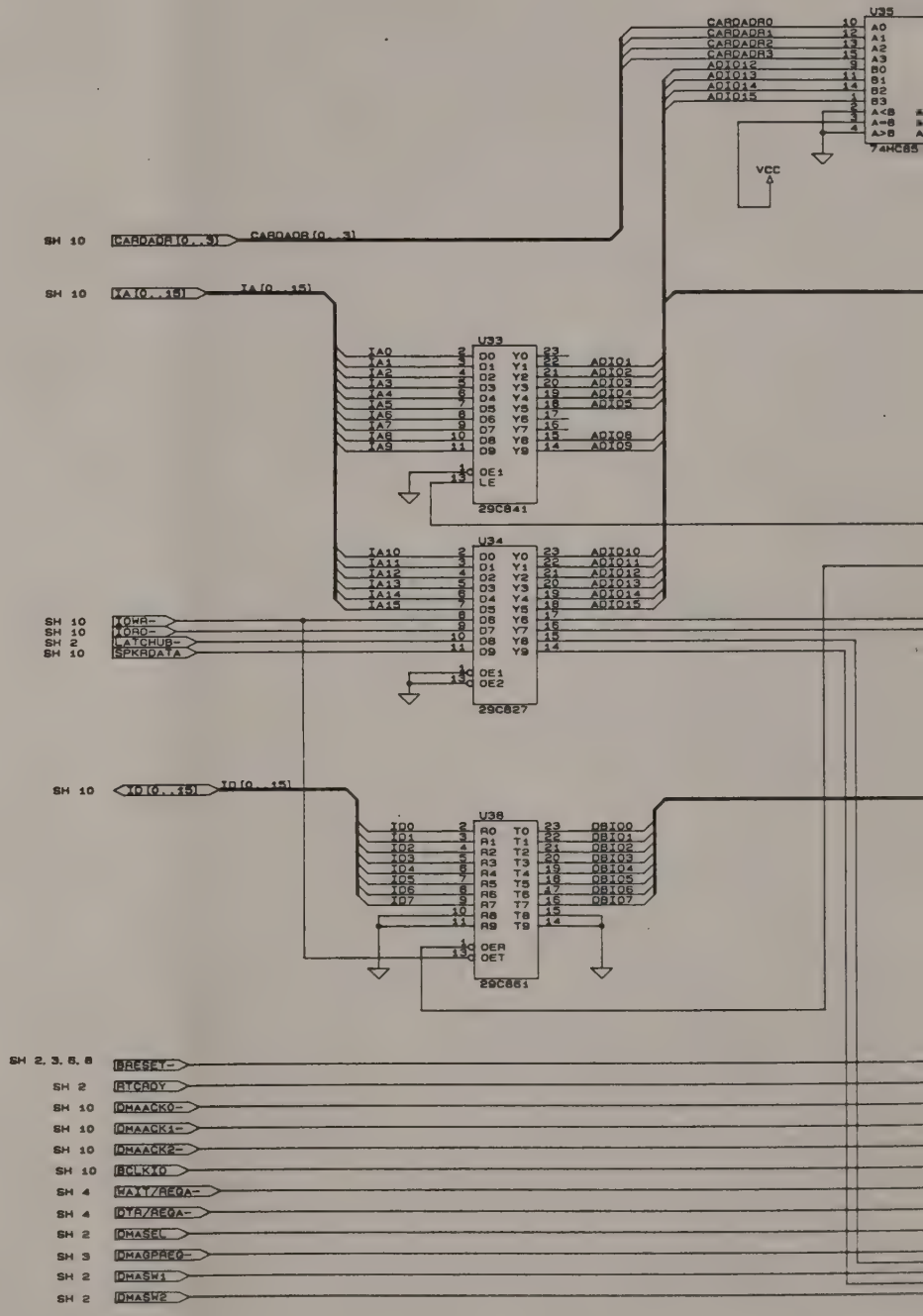
U35
CARDADR0
CARDADR1
CARDADR2
CARDADR3
ADIO12
ADIO13
ADIO14
ADIO15
A0
A1
A2
A3
B0
B1
B2
B3
A<B
A=B
A>B
74HC85
VCC
SH 10
CARDADR[0..3]
CARDADR[0..3]
SH 10
XA[0..15]
XA[0..15]
U33
XA0
XA1
XA2
XA3
XA4
XA5
XA6
XA7
XA8
XA9
D0
D1
D2
D3
D4
D5
D6
D7
D8
D9
Y0
Y1
Y2
Y3
Y4
Y5
Y6
Y7
Y8
Y9
ADIO1
ADIO2
ADIO3
ADIO4
ADIO5
ADIO8
ADIO9
OE1
LE
29C841
U34
XA10
XA11
XA12
XA13
XA14
XA15
ADIO10
ADIO11
ADIO12
ADIO13
ADIO14
ADIO15
SH 10
XOWR-
SH 10
XORD-
SH 2
LATCHUB-
SH 10
SPKRDATA
OE1
OE2
29C827
SH 10
XD[0..15]
XD[0..15]
U36
XD0
XD1
XD2
XD3
XD4
XD5
XD6
XD7
A0
A1
A2
A3
A4
A5
A6
A7
A8
A9
T0
T1
T2
T3
T4
T5
T6
T7
T8
T9
DB100
DB101
DB102
DB103
DB104
DB105
DB106
DB107
OER
OET
29C861
SH 2, 3, 8, 8
BRESET-
SH 2
RTCADY
SH 10
DMAACK0-
SH 10
DMAACK1-
SH 10
DMAACK2-
SH 10
BCLKIO
SH 4
WAIT/REQA-
SH 4
DYB/REQA-
SH 2
DMASEL
SH 3
DMAGPREQ-
SH 2
DMASW1
SH 2
DMASW2

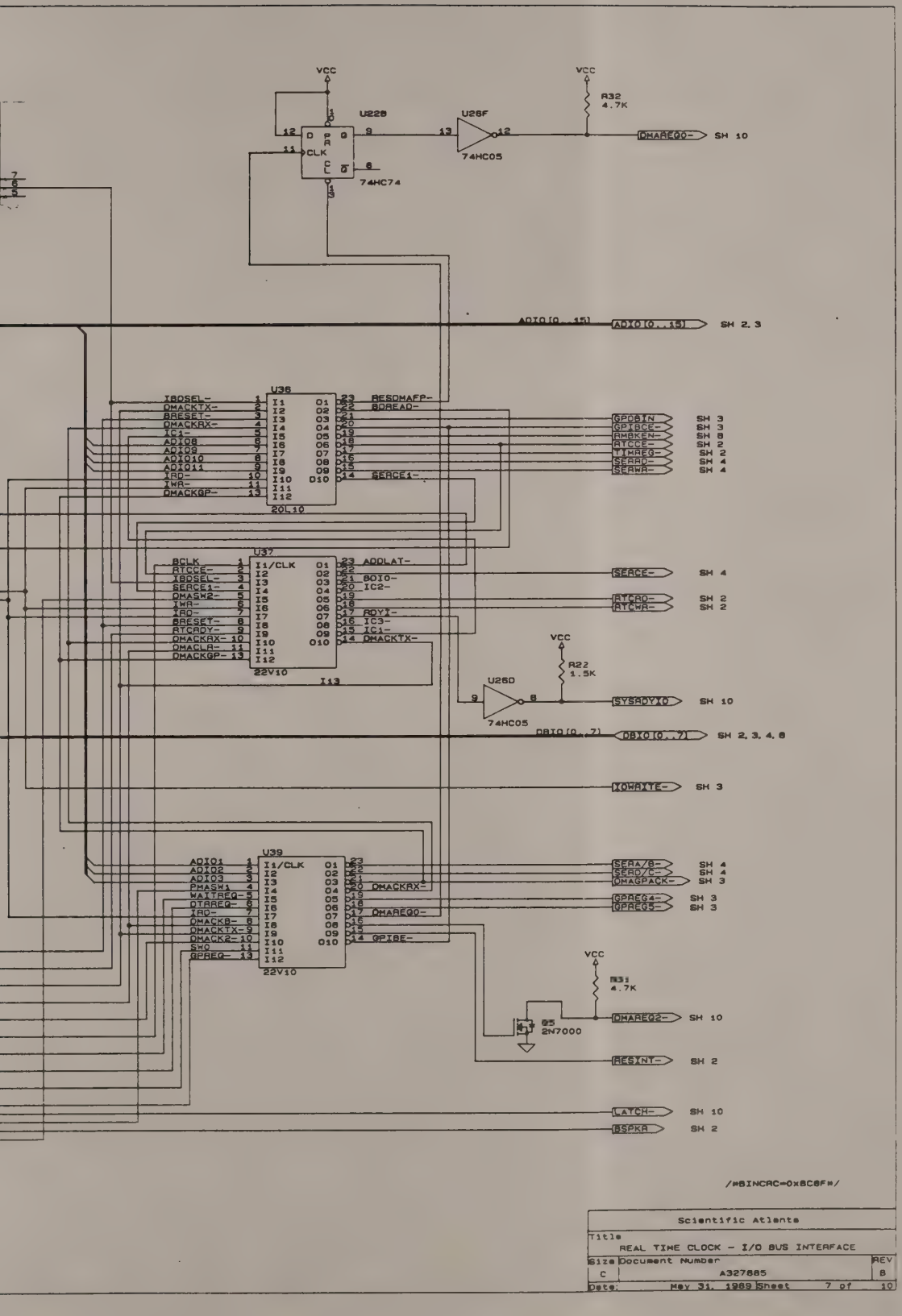
VCC
U22B
74HC74
U26F
74HC05
R32
4.7K
DMAREQ0-
SH 10
ADIO[0..15]
ADIO[0..15]
SH 2, 3
U36
IBOSEL-
DMACKTX-
BRESET-
DMACKRX-
IC1-
ADIO8
ADIO9
ADIO10
ADIO11
IRD-
IWR-
DMACKGP-
RESOMAFP-
BDREAD-
GPOBIN
GPIBCE-
AMBKEN-
RTCCE-
TIMREQ-
SERRD-
SERWR-
SERCE1-
20L10
U37
BCLK
RTCCE-
IBOSEL-
SERCE1-
DMASW2-
IWR-
IRD-
BRESET-
RTCRDY-
DMACKRX-
DMACLR-
DMACKGP-
ADDLAT-
BOIO-
IC2-
ROYI-
IC3-
IC1-
DMACKTX-
22V10
I13
SERCE-
RTCRD-
RTCWR-
SH 4
SH 2
U26D
74HC05
R22
1.5K
SYSRDYI0
DBIO[0..7]
DBIO[0..7]
SH 2, 3, 4, 8
IOWRITE-
SH 3
U39
ADIO1
ADIO2
ADIO3
PMASW1
WAITREQ-
DTAREQ-
IRD-
DMACKB-
DMACKTX-
DMACKR2-
SWO
GPREQ-
DMACKRX-
DMAREQ0-
GPIBE-
22V10
SERA/B-
SERD/C-
DMAGPACK-
GPREG4-
GPREG5-
SH 4
SH 4
SH 3
SH 3
SH 3
R31
4.7K
Q5
2N7000
DMAREQ2-
SH 10
RESINT-
SH 2
LATCH-
SH 10
BSPKR
SH 2
/*BINCRC=0x8C8F*/
Scientific Atlanta
Title
REAL TIME CLOCK - I/O BUS INTERFACE
Size
C
Document Number
A327885
REV
8
Date: May 31, 1989 Sheet 7 of 10

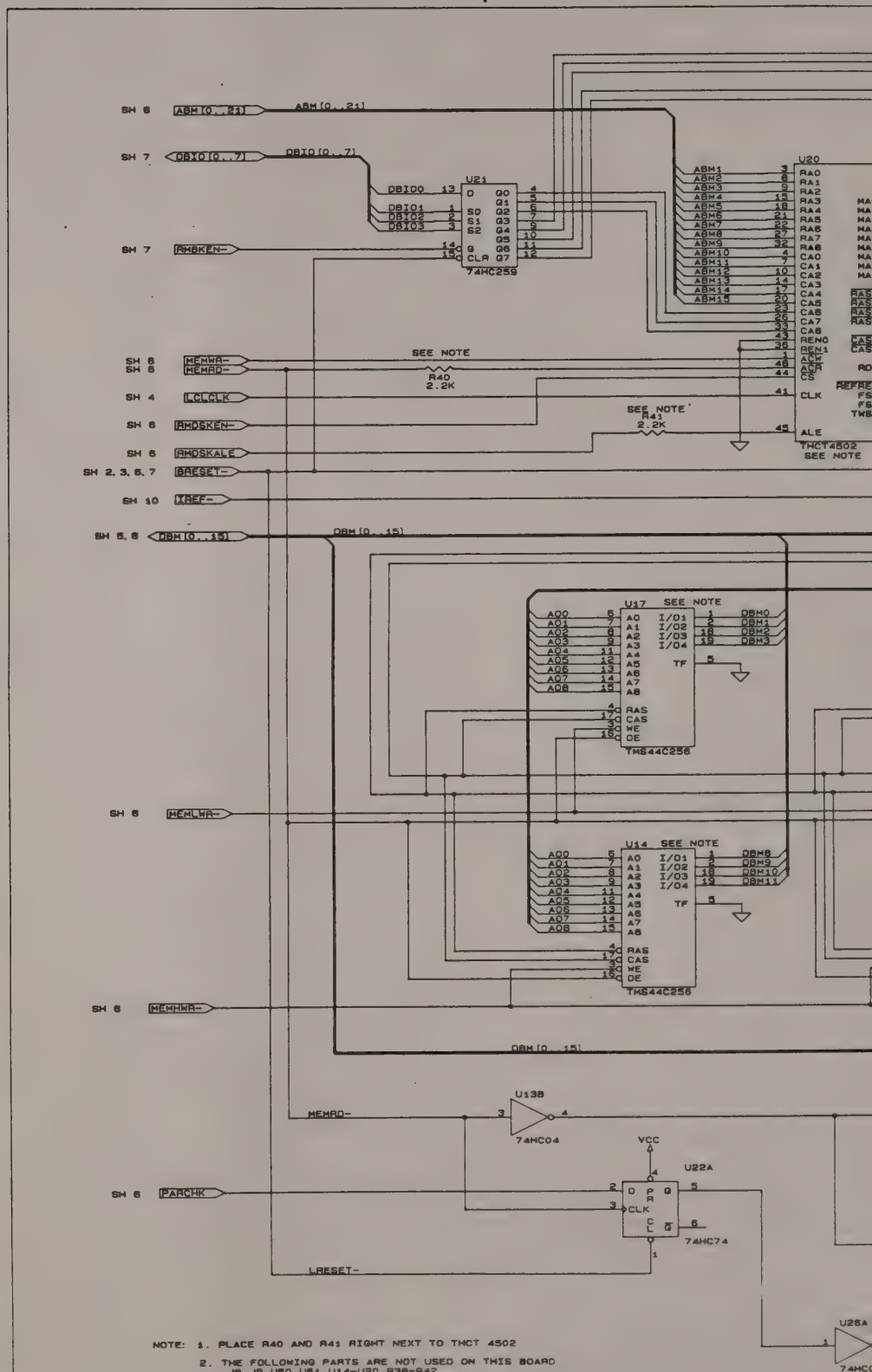
SH 6
ABM[0..21]
SH 7
DBIO[0..7]
DBI00
DBI01
DBI02
DBI03
U21
74HC259
SH 7
RMBKEN-
ABM1
ABM2
ABM3
ABM4
ABM5
ABM6
ABM7
ABM8
ABM9
ABM10
ABM11
ABM12
ABM13
ABM14
ABM15
U20
RA0
RA1
RA2
RA3
RA4
RA5
RA6
RA7
RA8
CA0
CA1
CA2
CA3
CA4
CA5
CA6
CA7
CA8
RENO
REN1
CS
CLK
ALE
THCT4502
SEE NOTE
SH 6
MEMWR-
SH 6
MEMRD-
SEE NOTE
R40
2.2K
SH 4
LCLCLK
SH 6
RMDSKEN-
SEE NOTE
R41
2.2K
SH 6
RMDSKALE
SH 2, 3, 6, 7
RRESET-
SH 10
XREF-
SH 5, 6
DBM[0..15]
U17
SEE NOTE
A00
A01
A02
A03
A04
A05
A06
A07
A08
I/O1
I/O2
I/O3
I/O4
TF
RAS
CAS
WE
OE
DBM0
DBM1
DBM2
DBM3
TMS44C256
SH 6
MEMLWR-
U14
SEE NOTE
DBM8
DBM9
DBM10
DBM11
TMS44C256
SH 6
MEMHWR-
DBM[0..15]
U13B
74HC04
MEMRD-
VCC
U22A
SH 6
PARCHK
74HC74
LRESET-
U26A
74HC
NOTE: 1. PLACE R40 AND R41 RIGHT NEXT TO THCT 4502
2. THE FOLLOWING PARTS ARE NOT USED ON THIS BOARD
J8, J9, U60, U61, U14-U20, R38-R42

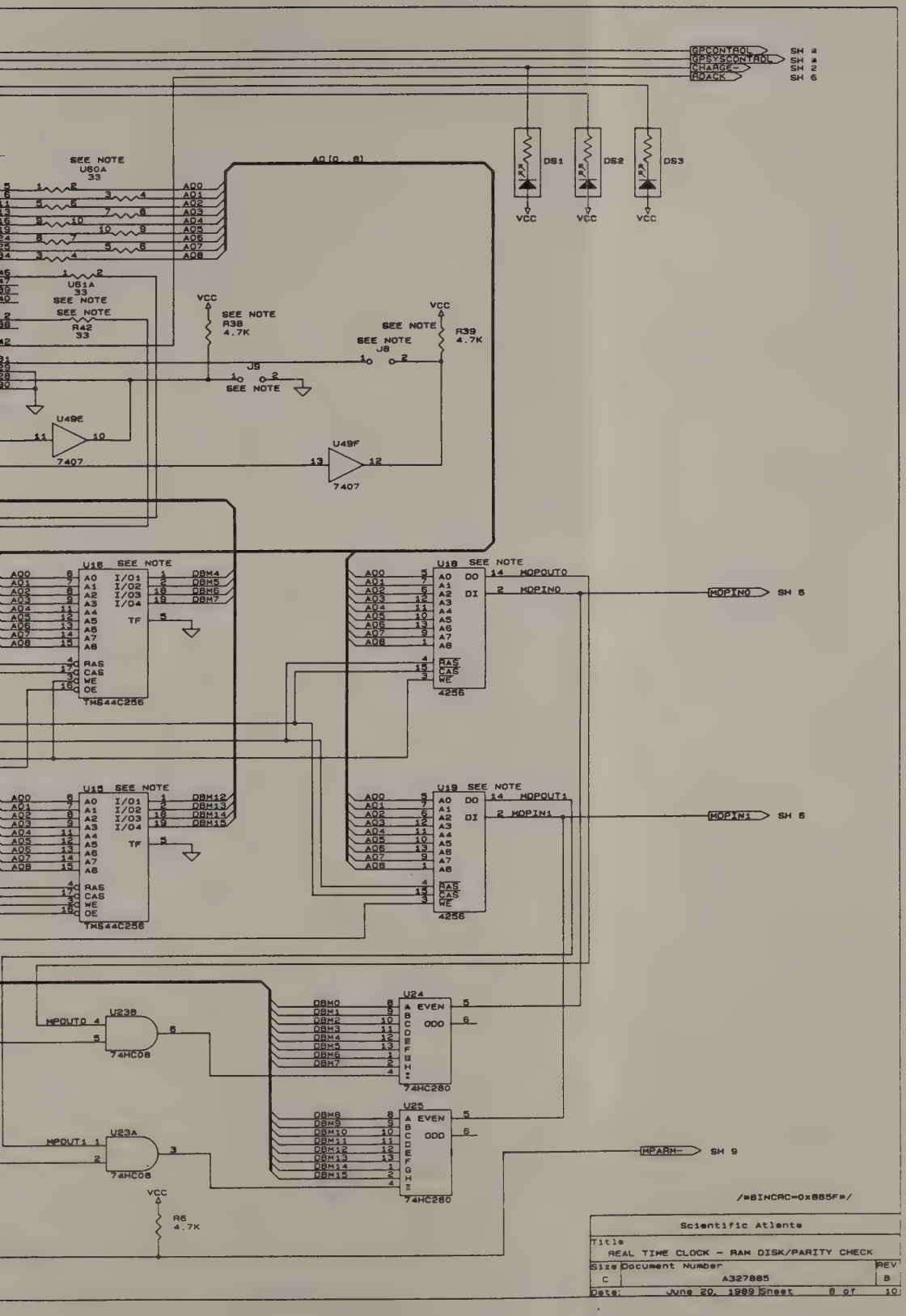
GPCONTROL
GPSYSCONTROL
CHARGE-
ADACK
SH 8
SH 8
SH 6
SH 6
DS1
DS2
DS3
VCC
SEE NOTE
U50A
33
A0[0..8]
A00
A01
A02
A03
A04
A05
A06
A07
A08
U51A
R42
R38
4.7K
R39
J8
J9
U49E
U49F
7407
U18
U19
TMS44C256
4256
MOPOUT0
MOPOUT1
MOPIN0
MOPIN1
DBM0
DBM1
DBM2
DBM3
DBM4
DBM5
DBM6
DBM7
DBM8
DBM9
DBM10
DBM11
DBM12
DBM13
DBM14
DBM15
U24
U25
EVEN
ODD
74HC280
U23A
U23B
74HC08
MPARM-
R6
4.7K
/*BINCAC=0x885F*/
Scientific Atlanta
REAL TIME CLOCK - RAM DISK/PARITY CHECK
A327885
June 20, 1989
8 of 10

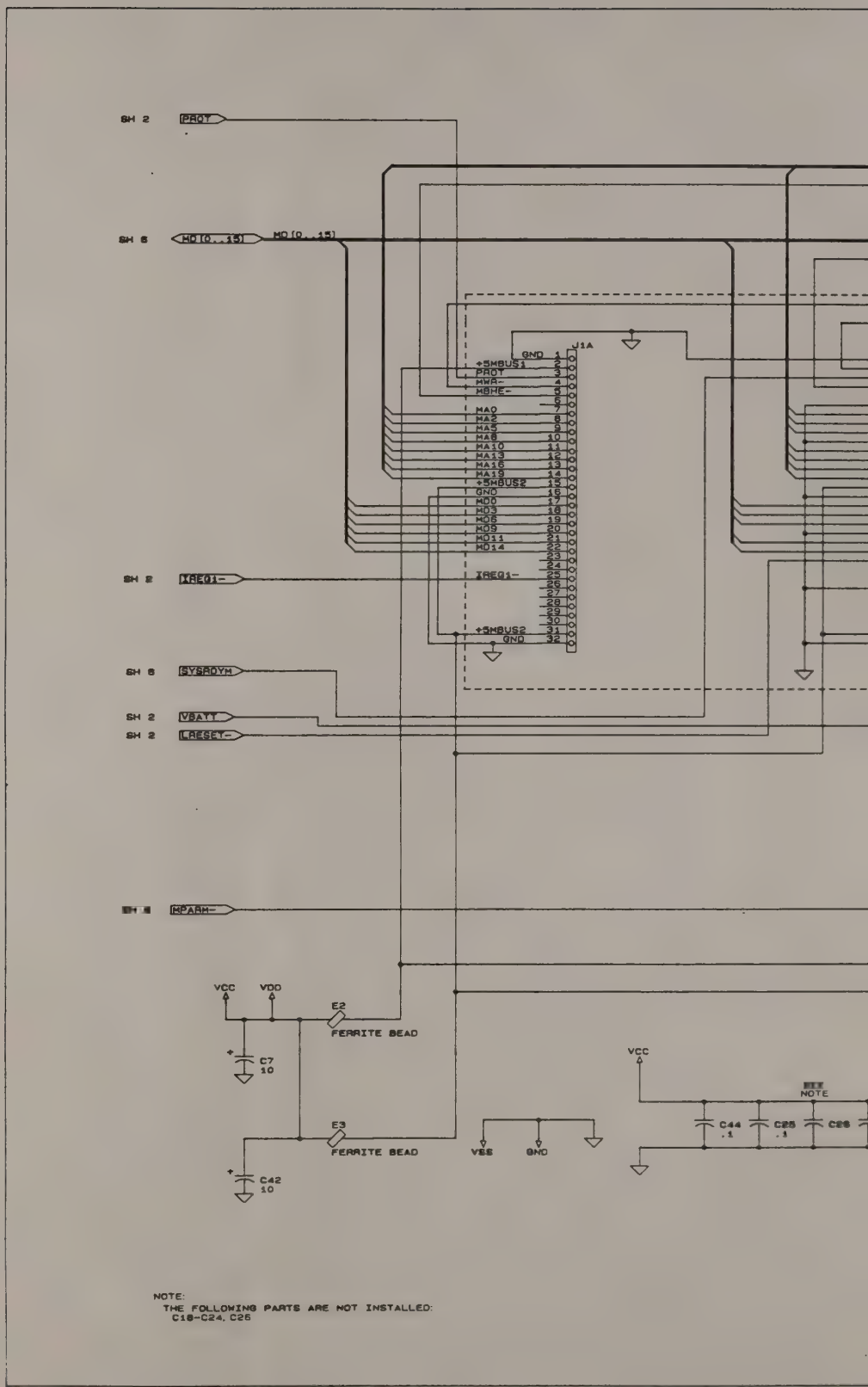

NOTE:
THE FOLLOWING PARTS ARE NOT INSTALLED:
C18-C24, C26

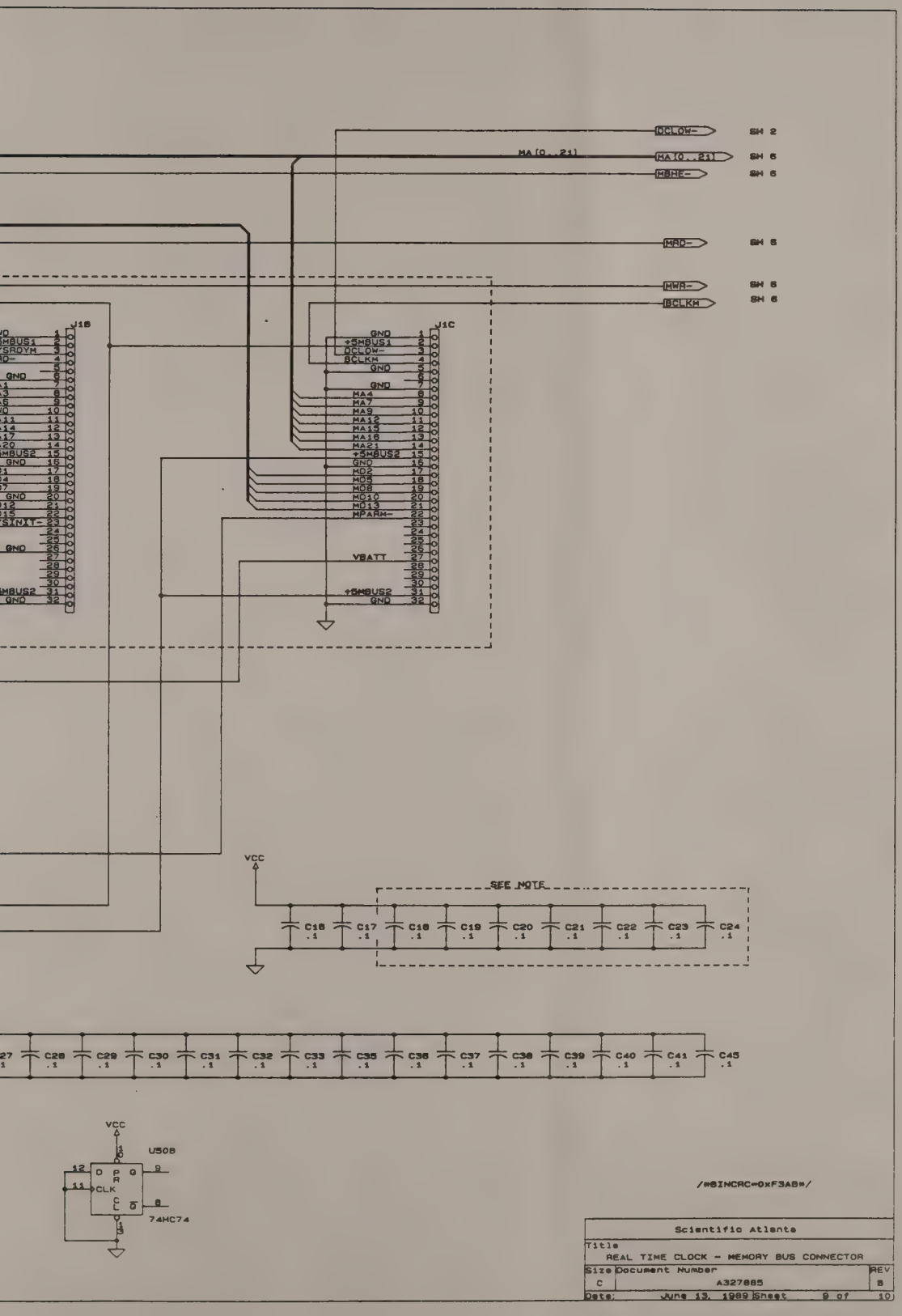
DCLOW-
SH 2
MA[0..21]
MA[0..21]
SH 6
MBHE-
SH 6
MAD-
SH 6
MWR-
SH 6
BCLKM
SH 6
J1B
J1C
GND
+5MBUS1
DCLOW-
BCLKM
MA4
MA7
MA9
MA12
MA15
MA18
MA21
+5MBUS2
MD2
MD5
MD8
MD10
MD13
MPARM-
VBATT
SEE NOTE
VCC
C16 .1
C17 .1
C18 .1
C19 .1
C20 .1
C21 .1
C22 .1
C23 .1
C24 .1
C27 .1
C28 .1
C29 .1
C30 .1
C31 .1
C32 .1
C33 .1
C35 .1
C36 .1
C37 .1
C38 .1
C39 .1
C40 .1
C41 .1
C45 .1
U50B
74HC74
/*8INCRC=0xF3AB*/
Scientific Atlanta
REAL TIME CLOCK - MEMORY BUS CONNECTOR
A327885
June 13, 1989

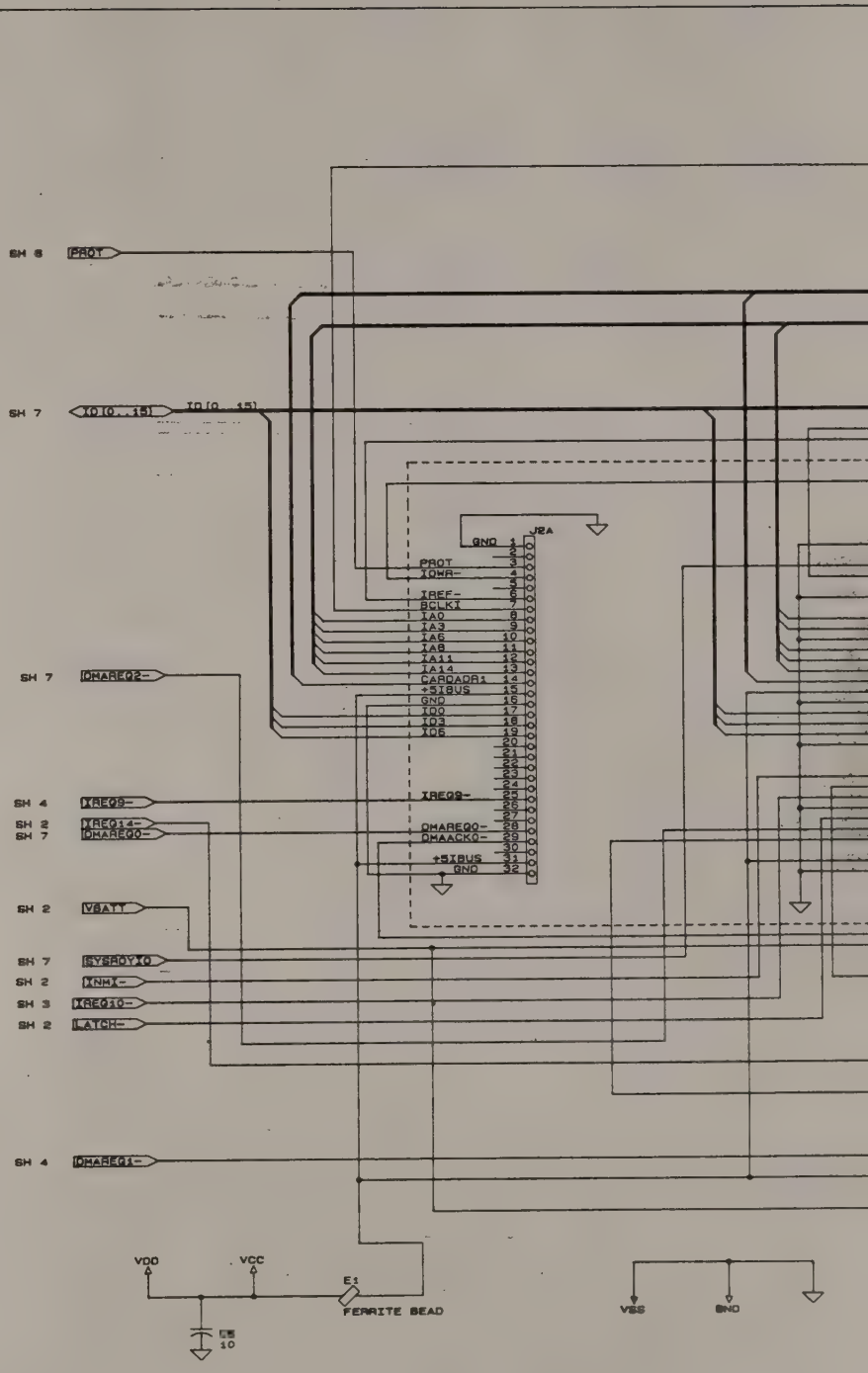
SH 8
PROT
SH 7
XD[0..15]
XD[0..15]
J2A
GND 1
2
PROT 3
IOWR- 4
5
IREF- 6
BCLKI 7
IA0 8
IA3 9
IA6 10
IA8 11
IA11 12
IA14 13
CARDADR1 14
+5IBUS 15
GND 16
IDO 17
ID3 18
ID6 19
20
21
22
23
24
IREQ9- 25
26
27
DMAREQ0- 28
DMAACK0- 29
30
+5IBUS 31
GND 32
SH 7
DMAREQ2-
SH 4
XREQ9-
SH 2
XREQ14-
SH 7
DMAREQ0-
SH 2
VBATT
SH 7
SYSRDYX0
SH 2
XNMI-
SH 3
XREQ10-
SH 2
LATCH-
SH 4
DMAREQ1-
VDD
VCC
E1
FERRITE BEAD
L5
10
VSS
GND

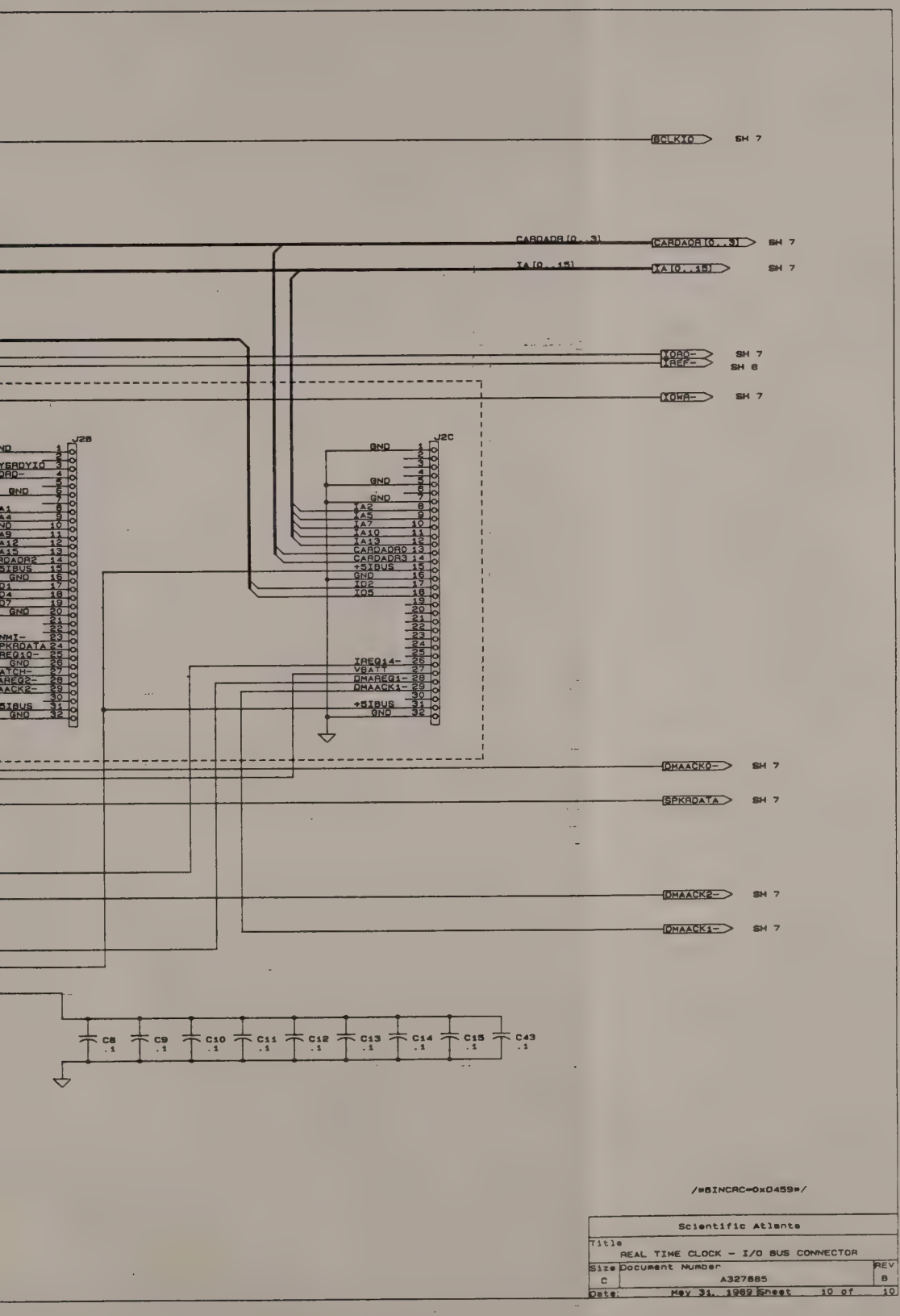
BCLKIO
SH 7
CARDADR[0..3]
CARDADR[0..3]
SH 7
IA[0..15]
IA[0..15]
SH 7
XOR0-
SH 7
XREF-
SH 6
XOWA-
SH 7
J2B
J2C
GND
IA2
IA5
IA7
IA10
IA13
CARDADR0
CARDADR3
+5IBUS
IRQ2
IRQ5
IREQ14-
VBATT
DMAREQ1-
DMAACK1-
DMAACK0-
SH 7
SPKRDATA
SH 7
DMAACK2-
SH 7
DMAACK1-
SH 7
C8 .1
C9 .1
C10 .1
C11 .1
C12 .1
C13 .1
C14 .1
C15 .1
C43 .1
/*$INCRC=0x0459*/
Scientific Atlanta
Title
REAL TIME CLOCK - I/O BUS CONNECTOR
Size C
Document Number A327885
REV B
Date: May 31, 1989 Sheet 10 of 10